The City of Durant encourages participation from all its citizens. If participation at any public meeting is not possible due to a disability, notification to the City Clerk at least 48 hours prior to the scheduled meeting is encouraged in order to make the necessary accommodations. The City of Durant may waive the 48-hour rule if interpreters for the deaf (signing) or translation services for limited English proficient (LEP) individuals are not the necessary accommodation.

DURANT CITY COUNCIL

6:00 PM | **Roscoe J. Hatfield Council Chambers, Durant City Hall** | **September 13, 2016**

AGENDA

DURANT CITY HALL
300 W. EVERGREEN, DURANT, OK
ROSCOE J. HATFIELD COUNCIL CHAMBERS

CALL TO ORDER

INVOCATION

ROLL CALL

ORDER OF BUSINESS

1. Consent Items

To help streamline meetings and allow the focus to be on other items requiring strategic thought, the "Consent Items" portion of the agenda groups the routine, procedural, and self-explanatory non-controversial items together. These items are voted on in a single motion (one vote). However, any Council member requesting further information on a specific item thus removes it from the "Consent Items" section for individual attention and separate vote.

a. Consider Approval of Regular Meeting Minutes of August 9, 2016

b. Consider Approval of Special Called Meeting Minutes of August 17, 2016

c. Consider Approval of Special Called Meeting Minutes of August 22, 2016

d. Consider Approval of Special Called Meeting Minutes of August 23, 2016

e. Consider Approval of Special Called Meeting Minutes of August 30, 2016

f. Consider Approval of Special Called Meeting Minutes of August 31, 2016

g. Consider Approval of Special Event Permit Application by Destry Hawthorne for Halloween Trick or Treat Event (SEP-2016-030)

h. Consider Approval of Special Called Meeting Minutes of September 1, 2016

i. Consider Approval of Claims for August 2016

j. Budget Amendment BA 2016-08 FINAL

k. Consider Approval of Special Event Permit Application by Cub Scout Pack 615 for Cub Scout Mobile on September 17, 2016

l. Consider Approval of Special Event Permit Application by Durant Main Street for Fall Carnival & Zombie Crawl on October 29, 2016

m. Consider Acceptance of Oklahoma Homeland Security Grant #750.065 for $4200 for Annual Broadwidth Service for the RDT 2 Communications Trailer

n. Consider Acceptance of Oklahoma Homeland Security Grant #750.067 for $375 for Annual Cellular Service for the RDT 2 Communications Trailer

o. Consider Approval of Contract (C-2016-67) with Interact/Harris for 911 Addressing and Mapping

p. Consider Approval of RFAP (2016-153) for the Purchase of Services with Interact/Harris

q. Consider Change Order For Digiticket Contract C-2015-72

r. Consider Approval of Request For Authorization To Purchase/Spend (RFAP #2016-169) for Electronic Citation Monthly Service Fees For Ten (10) Devices In The Amount Of $2,050 Per Month

s. Consider Acceptance of Oklahoma Highway Safety Office Traffic Safety Grant

t. Consider Recommendation of Durant Independent School District for Robert Bokies to Fill Vacated Seat on Durant Community Facilities Authority Board and Take Possible Action

u. Consider Acceptance of Donation from Discount Liquor in the Amount of $500.00 to Fire Department

v. Consideration To Void Contract C-2015-43 With Southern Oklahoma Development Association (SODA) For Grant Administration Services Relating To The Awarded US Department Of Economic Development (EDA) Grant # 08-01-05038 Project For The US Hwy 69 Bypass On / Off Ramps Serving The Commercial Metals Company Facility.

w. Consider Adoption of the 2016-2017 Durant / Bryan County Emergency Operations Plan Update

x. Consideration To Accept The 2016 Local Edward Byrne - Justice Assistance Grant (JAG) GMS Award 2016-DJ-BX-0601 From The

Office Of Justice Programs In The Amount Of $11,995 For An HVAC System To Be Installed At The Durant Police Department Firing Range. (C-2016-77)

y. Consideration To Accept The 2016 Land And Water Conservation Grant (LWCF) Award From The Oklahoma Department of Tourism And Recreation In The Amount Of $ 182,900 For Park Improvements At Carl Albert Park. (C-2016-78)

z. Consider Approval of Request For Authorization To Purchase/Spend(RFAP#2016-170)For $248,000. For Replacement of Drainage Pipe At Durant Middle School

aa. Consider Approval To Accept Low Bid For Concrete Drainage Pipe For The Durant Middle School Project #632

ab. Consideration For Approval To Apply For Grant Funding Through The Federal Emergency Management Administration (FEMA) 2016 Assistance To Firefighters (AFG) Grant.

1. Consideration For Approval To Apply For Grant Funding For Approximately $382,500 Through The Federal Emergency Management Administration (FEMA) 2016 Assistance To Firefighters (AFG) Vehicle Acquisition Grant Program To Purchase A 1500 GPM Pumper/ Engine
2. Consideration For Approval To Apply For Grant Funding For Approximately $25,000 Through The Federal Emergency Management Administration (FEMA) 2016 Assistance To Firefighters (AFG) Micro Grant Program To Purchase Turnout Gear Dryers.

ac. Consider Approval of Permanent Electric Utility Line Easement Parcel 11

ad. Consider Approval of Temporary Electric Utility Line Pulling Easement for Parcel 11

2. Consider Items Removed from Consent

3. Administration

a. Consider Request for Funding by Big Five Community Services Inc. for SORTS Public Transportation Program and Take Possible Action

b. Consider Recommendation To Remove East Bound Stop Sign From The Intersection of University and Cornell Drive

c. Consider Approval of Ordinance 1807 Adopting Supplement 2016 S-8 to the Code of Ordinances for the City of Durant

d. Consider Approval of the Agreement for Services between the City of Durant and the Durant Main Street Board of Directors (C-2016-65)

e. Consider Approval of Government Services Administration (GSA) Lease

4. Public Hearings

a. Consideration Ordinance # 1800- Rezoning from C-2 Highway Commercial to R-2 Two-Family Residential

5. Information Items

a. Financial Statements - July 2016

b. Planning Commission Meeting Minutes - July 19, 2016

c. Fire Department Monthly Report - August 2016

d. Police Department Monthly Report - July 2016

e. Parks Department Monthly Report - August 2016

f. Community Development Monthly Report - August 2016

g. Library Report - August 2016

h. Street Department Report - August 2016

i. Grant Report - August 2016

j. Emergency Management Services Report - August 2016

k. Human Resources Department Report - August 2016

6. Citizen Comments on Non-Agenda Items

Citizens wishing to address the council regarding matters which are not listed on the agenda will be required to sign up no later than 5 minutes prior to the scheduled starting time of the meeting. The sign-in sheet will contain space for citizen's name, address, phone number, and topic to be discussed. In this way, city staff will be able to follow-up on any issues presented if necessary.

7. Executive Session

a. Consider Executive Session to Discuss Hiring of City Manager (This Executive Session Authorized by Title 25, Section B(1) of the Oklahoma State Statutes

b. Consider Action Pursuant to 7(a) Above

8. New Business

ADJOURNMENT

CERTIFICATE

This is to certify that in conformity with the Oklahoma Open Meeting Act, public notice of the date, time and place of this meeting was filed with the City Clerk of Durant on the 10th day of November, 2015 and that an agenda of said meeting was posted at the place of such meeting at 2:40 p.m. on the 9th day of September, 2016.

Cynthia J. Price, City of Durant

Agenda Item: 1.a.

The City of Durant

Office of City Clerk

Memorandum

Date: 9/1/2016
To: Mayor and City Council
From: Cynthia J. Price, City Clerk
Re: Consider Approval of Regular Meeting Minutes of August 9, 2016

Council Information / Action Requested

Approve Regular Meeting Minutes of August 9, 2016

City Staff Information / Action Follow-up, if Council authorizes this action:

ATTACHMENTS:

Description	Type	Upload Date
Minutes - August 9, 2016	Exhibit	9/1/2016

Agenda posted on Durant City Hall Entry Door at This is to certify that in conformity with the Oklahoma Open Meeting Act, public notice of the date, time and place of this meeting was filed with the City Clerk of Durant on the 10th day of November, 2015 and that an agenda of said meeting was posted at the place of such meeting at 5:40 p.m. on the 5th day of August, 2016.

MINUTES OF THE REGULAR SCHEDULED MEETING OF THE DURANT CITY COUNCIL OF August 9, 2016 AT 6:00 PM, Roscoe J. Hatfield Council Chambers, Durant City Hall

CALL TO ORDER

Mayor Tomlinson called the meeting to order at 6:11 p.m.

INVOCATION

The invocation was provided by James Dalton.

ROLL CALL

Present: Council Member Chad Hitchcock
Council Member Billy L. Orr
Council Member Jerry Tomlinson
Vice-Mayor Destry Hawthorne
Mayor Stewart Hoffman

City Attorney Pat Phelps
Acting City Manager Donnalla Miller
City Clerk Cynthia J Price

(*denotes partial attendance)

Absent: None

Mayor Hoffman declared a quorum.

1. Consent Items

To help streamline meetings and allow the focus to be on other items requiring strategic thought, the "Consent Items" portion of the agenda groups the routine, procedural, and self-explanatory non-controversial items together. These items are voted on in a single motion (one vote). However, any Council member requesting further information on a specific item thus removes it from the "Consent Items" section for individual attention and separate vote.

a. Consider Approval of Regular Meeting Minutes of July 12, 2016

b. Consider Approval of Special Called Meeting Minutes of July 25, 2016

c. Consider Approval of Claims - July 2016

d. Consider Approval of Recommendation by Cemetery Advisory Board to Remove Flat Marker Restriction from Section F of Highland Cemetery

e. Consider Approval of Request for Authorization to Purchase (RFAP) # 2016-106 for the Purchase of Hand Held Police Radios

f. Consider Request for Authorization to Purchase (RFAP) # 2016-149 for Mixed Mode Receiver Voting System for Radio Communications

g. Consider Approval of Request for Authorization to Purchase (RFAP) # 2016-123 for the Care and Housing of Municipal Prisoners in Bryan County Jail

h. Consider Approval of a Resolution for Fines and Costs for Speeding in a Construction Zone

i. Consider Approval of Request for Authorization to Purchase for Janitorial Services (RFAP-2016-140)

j. Authorization to Apply - 2017 Emergency Management Performance Grant

k. Consider Approval of Professional Services Agreement - Revised between City of Durant and Paul S. Buntz Municipal Consulting (C-2016-62)

l. Memorandum of Understanding between the City of Durant and Sunstar, LLC for Heritage Crossing Drainage

m. Consider Approval Memorandum of Agreement City of Durant and Choctaw Nation of Oklahoma (C-2016-68)

n. Consider Approval of Memorandum of Agreement City of Durant and Commercial Metals Company

o. Request Approval of RFAP 2016-120 for Ricoh USA, INC (Financial) Vendor #005304 Copier Lease and Use Fees for FY16/17

p. Request Approval of RFAP 2016-139 for Tyler Technologies Municipal Software Support and Maintenance Modules Vendor 004713

Approved

Vice Mayor Hawthorne asked that Items 1 (l) and 1 (n) be removed for further

discussion.

Motion was made by Jerry Tomlinson and seconded by Chad Hitchcock to approve remaining consent items as presented. Motion Passed with the following vote:

Ayes: Hawthorne, Hitchcock, Hoffman, Orr, Tomlinson

2. Consider Items Removed from Consent

Item 2(l) - Vice Mayor Hawthorne recommended this item be tabled to receive further clarification.

Motion was made by Jerry Tomlinson and seconded by Destry Hawthorne to table Item 2(l). Motion Passed with the following vote:

Ayes: Hawthorne, Hitchcock, Hoffman, Orr, Tomlinson

Item 2(n) - Upon questioning by Vice Mayor Hawthorne, Jacque Wilson, Projects Manager, stated the parties are not in agreement as to the terms of the Memorandum of Agreement. Mr. Wilson recommended this item be tabled.

Motion was made by Jerry Tomlinson and seconded by Chad Hitchcock to table Item 2(n). Motion Passed with the following vote:

Ayes: Hawthorne, Hitchcock, Hoffman, Orr, Tomlinson

3. Administration

a. Consider Approval of Ordinance 2016-1793 Amending Section 31.01(B)(1)and (2) of Durant City Code Restating Duties of City Clerk

Tabled

City Attorney Pat Phelps stated the duties of the city clerk have been rearranged and the ordinance as it stands does not reflect those changes. The

proposed ordinance was not provided to council prior to the meeting for review. Mr. Phelps suggested the item be tabled.

Motion was made by Jerry Tomlinson and seconded by Destry Hawthorne to table Item 3(a). Motion Passed with the following vote:

Ayes: Hawthorne, Hitchcock, Hoffman, Orr, Tomlinson

b. Consider Approval of Ordinance 1794 Amending Section 31.02 B(1) and B(2) of Durant City Code be Amended to Restate Duties of City Treasurer

Approved

City Attorney Pat Phelps stated the duties of the city treasurer have been changed. The new ordinance defines the present duties of the city treasurer.

Motion was made by Jerry Tomlinson and seconded by Chad Hitchcock to approve Ordinance 1794, Section 1, amending Section 31.02 B(1) and B(2) of Durant City Code to restate duties of City Treasurer. Motion Passed with the following vote:

Ayes: Hawthorne, Hitchcock, Hoffman, Orr, Tomlinson

Motion was made by Jerry Tomlinson and seconded by Chad Hitchcock to approve Ordinance 1794, Section 2, declaring an emergency. Motion Passed with the following vote:

Ayes: Hawthorne, Hitchcock, Hoffman, Orr, Tomlinson

c. Consideration Ordinance # 1799- Adoption of the 2015 International Property Maintenance Code

Approved

Marty Cook, Community Development Director, addressed council. Mr. Cook stated this model is recommended by the State of Oklahoma for adoption. Mr. Cook recommended adoption of the 2015 International Property Maintenance Code.

Motion was made by Jerry Tomlinson and seconded by Destry Hawthorne to approve adoption of 2015 International Property Maintenance Code Section 1-6. Motion Passed with the following vote:

Ayes: Hawthorne, Hitchcock, Hoffman, Orr, Tomlinson

Motion was made by Jerry Tomlinson and seconded by Destry Hawthorne to approve Ordinance 1799, Section 7, declaring an emergency. Motion Passed with the following vote:

Ayes: Hawthorne, Hitchcock, Hoffman, Orr, Tomlinson

d. CONSIDER ORDINANCE NO. 1792, AMENDING THE CODE OF ORDINANCES OF THE CITY OF DURANT, OKLAHOMA, BY ADDING TO TITLE III, “TOURISM TAX,” CONSISTING OF NEW SECTIONS 37.120 THROUGH 37.148, INCLUSIVE; LEVYING A FIVE PERCENT (5%) TAX UPON THE GROSS PROCEEDS OR GROSS RECEIPTS DERIVED FROM OCCUPANCY OF A ROOM OR ROOMS IN THIS CITY, WITH SAID TAX TO BE USED FOR ENHANCING AND PROMOTING TOURISM DEVELOPMENT; PROVIDING CITATION AND DEFINITIONS; PROVIDING FOR TAX RATE, EXEMPTIONS, AND EXEMPTION CERTIFICATES; REQUIRING TAX TO BE SEPARATELY STATED ON BILLS; REQUIRING RECORDS TO BE KEPT; PROVIDING FOR TAX RETURNS, BONDS, ASSESSMENT, DETERMINATION OF TAX, REFUNDS, AND NOTICES; PROVIDING THAT REMEDIES ARE EXCLUSIVE; PROVIDING GENERAL POWERS OF THE CITY CLERK; PROVIDING FOR ADMINISTRATION OF OATHS AND COMPELLING TESTIMONY; PROVIDING FOR CERTIFICATES OF REGISTRATION, INTEREST, AND PENALTIES; PROVIDING FOR HANDLING OF DELINQUENT TAXES; PROVIDING FOR COLLECTION BY SUIT; PROVIDING FOR USE OF FUNDS; PROVIDING FOR CONFIDENTIALITY OF RECORDS; PROVIDING FOR PROCEEDINGS TO COLLECT TAX AND PENALTIES FOR FAILURE TO COMPLY WITH THIS ARTICLE; PROVIDING FOR OPERATOR'S DISCOUNT; PROVIDING THAT PROVISIONS ARE CUMULATIVE; PROVIDING FOR SEVERABILITY; AND PROVIDING EFFECTIVE DATE AND CODIFICATION

Tabled

Mayor Hoffman addressed council and stated he was speaking in regard to both Items 3(d) and 3(e). Mayor Hoffman stated he had met with hotel owners who provided him with a second proposed ordinance for council's consideration. Mayor Hoffman suggested tabling this item to give council an opportunity to review the second proposed ordinance. Mayor Hoffman asked council members to provide Janet Reed, Director of the Durant Area Chamber of Commerce, with any comments by Friday, August 12, 2016. Mayor Hoffman thanked the hotel owners for their participation in the discussions.

Motion was made by Jerry Tomlinson and seconded by Destry Hawthorne to table Item 3(d). Motion Passed with the following vote:

Ayes: Hawthorne, Hitchcock, Hoffman, Orr, Tomlinson

e. CONSIDER RESOLUTION 2016-19 AUTHORIZING THE CALLING AND HOLDING OF AN ELECTION IN THE CITY OF DURANT, OKLAHOMA, ON THE 8th DAY OF NOVEMBER, 2016, FOR THE PURPOSE OF SUBMITTING TO THE QUALIFIED ELECTORS OF THE CITY OF DURANT, OKLAHOMA, THE QUESTION OF THEIR APPROVAL OR REJECTION OF ORDINANCE NO. 1792 LEVYING A FIVE PERCENT (5%) TAX UPON THE GROSS PROCEEDS OR GROSS RECEIPTS DERIVED FROM OCCUPANCY OF A ROOM OR ROOMS IN THIS CITY; PROVIDING THAT THE REVENUES FROM SUCH TAX SHALL BE USED FOR ENHANCING AND PROMOTING TOURISM DEVELOPMENT; PROVIDING EFFECTIVE DATE; PROVIDING FOR ADMINISTRATION AND COLLECTION OF SUCH TAX; PROVIDING THE PROVISIONS ARE CUMULATIVE; AND PROVIDING FOR SEVERABILITY.

Tabled

Mayor Hoffman addressed council and stated he was speaking in regard to both Items 3(d) and 3(e). Mayor Hoffman stated he had met with hotel owners who provided him with a second proposed ordinance for council's consideration. Mayor Hoffman suggested tabling this item to give council an opportunity to review the second proposed ordinance. Mayor Hoffman asked council members to provide Janet Reed, Director of the Durant Area Chamber of Commerce, with any comments by Friday, August 12, 2016.

Motion was made by Jerry Tomlinson and seconded by Destry Hawthorne to table Item 3(e). Motion Passed with the following vote:

Ayes: Hawthorne, Hitchcock, Hoffman, Orr, Tomlinson

f. Consider Approval of Ordinance 1795 Amending Chapter 30, Section 30.03 of the Durant City Code Relating to the Time of Regular Meetings of the City Council

Approved

City Attorney Pat Phelps addressed council and states the amendment of Ordinance 1795 is necessary to accurately reflect the time schedule for regular meetings of the Durant City Council.

Motion was made by Jerry Tomlinson and seconded by Destry Hawthorne to approve Ordinance 1795, Section 1, amending Chapter 30, Section 30.03 of the Durant City Code relating to the time of regular meetings of city council. Motion Passed with the following vote:

Ayes: Hawthorne, Hitchcock, Hoffman, Orr, Tomlinson

Motion was made by Jerry Tomlinson and seconded by Destry Hawthorne to approve Ordinance 1795, Section 2, declaring an emergency. Motion Passed with the following vote:

Ayes: Hawthorne, Hitchcock, Hoffman, Orr, Tomlinson

g. Consider Approval of Ordinance 1796 Amending Section 30.04 of the Durant City Code Relating to the Place of City Council Meetings

Approved

City Attorney Pat Phelps addressed council and stated the ordinance in its present form states all city council meetings are to be held in city hall. The proposed ordinance will allow for special called city council meetings or emergency city council meetings to be held at locations other than city hall.

Motion was made by Jerry Tomlinson and seconded by Chad Hitchcock to approve Ordinance 1796, Section 1, amending Section 30.04 of the Durant City Code relating to the place of city council meetings. Motion Passed with the following vote:

Ayes: Hawthorne, Hitchcock, Hoffman, Orr, Tomlinson

Motion was made by Jerry Tomlinson and seconded by Chad Hitchcock to approve Ordinance 1796, Section 2, declaring an emergency. Motion Passed with the following vote:

Ayes: Hawthorne, Hitchcock, Hoffman, Orr, Tomlinson

h. Consider Approval of Ordinance 1797 Repealing a Portion of Chapter 133, Section 133.01(A) of the Durant City Code Regarding Drinking in

Public

Approved

City Attorney Pat Phelps addressed council and stated, if passed, it would allow properly licensed restaurants within the city limits to serve adult beverages to patrons dining outside at their restaurants.

Motion was made by Jerry Tomlinson and seconded by Chad Hitchcock to approve Ordinance 1797, Section 1, repealing a portion of Chapter 133, Section 133.01(A) of the Durant City Code regarding drinking in public. Motion Passed with the following vote:

Ayes: Hawthorne, Hitchcock, Hoffman, Orr, Tomlinson

Motion was made by Jerry Tomlinson and seconded by Chad Hitchcock to approve Ordinance 1797, Section 2, declaring an emergency. Motion Passed with the following vote:

Ayes: Hawthorne, Hitchcock, Hoffman, Orr, Tomlinson

i. Consider Approval of Ordinance 1798 Repealing Section 111.032 of Chapter 111 of the Durant City Code Regarding Consumption of Alcoholic Beverages in Public Places

Approved

City Attorney Pat Phelps addressed council.

Motion was made by Jerry Tomlinson and seconded by Destry Hawthorne to approve Ordinance 1798, Section 1, repealing Section 111.032 of Chapter 111 of the Durant City Code regarding consumption of alcoholic beverages in public places. Motion Passed with the following vote:

Ayes: Hawthorne, Hitchcock, Hoffman, Orr, Tomlinson

Motion was made by Jerry Tomlinson and seconded by Destry Hawthorne to approve Ordinance 1798, Section 2, declaring an emergency. Motion Passed with the following vote:

Ayes: Hawthorne, Hitchcock, Hoffman, Orr, Tomlinson

j. Consider Approval of Request for Authorization to Purchase (RFAP) #

2016-147 for Backstop Padding at Durant Multi Sport Complex to Comply with Southeastern Oklahoma State University Contract

Approved

Keach Ballard, Parks Superintendent, addressed council and stated this request for authorization is made in accordance with an agreement between Southeastern Oklahoma State University and the City of Durant to be in compliance with NCAA rules and sanctions. Mr. Ballard stated the project amount is $18,881 however this project was only budgeted for $5,000. Council Member Hitchcock asked why the Durant Community Facilities Authority (DCFA) was not paying the cost of this project. Council Member Tomlinson stated some financial assistance may be available to the city from the DCFA and this could be discussed at the next DCFA meeting. Councill Member Tomlinson further stated that if timing is a factor he would be willing as board chairman to call a special meeting of the DCFA to discuss.

Motion was made by Jerry Tomlinson and seconded by Destry Hawthorne to authorize to purchase backstop padding at the Durant Multi Sports Complex to comply with the Southeastern Oklahoma State University contract and NCAA requirements in the amount of $5,000 from the City of Durant and contingent upon the balance of funding of $14,000 from the Durant Community Facilities Authority. Motion Passed with the following vote:

Ayes: Hawthorne, Hitchcock, Hoffman, Orr, Tomlinson

k. Consider Approval of Contract Services Agreement for City Attorney Services City of Durant (C-2016-63)

Approved

Acting City Manager Donnalla Miller addressed council and stated that effective June 30, 2016, the city attorney was removed from the City of Durant payroll. All of Mr. Phelp's earned and accrued leave was voluntarily relinquished at that time. A contract for professional services was provided. There is no increase in fees from the previous years, As city council has directed, a new request for qualifications will be completed and will be advertised once a new city manager is in place. Ms. Miller stated we must have a city attorney in the meantime and recommended approval of this contract.

Motion was made by Jerry Tomlinson and seconded by Destry Hawthorne to approve contract services agreement for city attorney services for the City of Durant (C-2016-63). Motion Passed with the following vote:

Ayes: Hawthorne, Hitchcock, Hoffman, Orr, Tomlinson

l. Consider Approval of Participation and Exclusivity Agreement Between the City of Durant and 3B Grave Service (C-2016-69)

Approved

Cemetery Superintendent Cynthia Price and Acting City Manager Donnalla Miller addressed council. Ms. Price provided a brief history of events leading up to the search for a professional grave service. Ms. Price reviewed the changes to the original proposed contract which resulted from discussions with members of the community and with Matt Barnhill, owner and operator of 3B Grave Service. Ms. Price answered questions from council.

Motion was made by Chad Hitchcock and seconded by Destry Hawthorne to approve Participation and Exclusivity Agreement between City of Durant and 3B Grave Service (C-2016-69). Motion Passed with the following vote:

Ayes: Hawthorne, Hitchcock, Hoffman, Orr, Tomlinson

m. Consider Approval of Oklahoma Department of Transportation (ODOT) Project Agreement CMC Road Improvements

Approved

Jacque Wilson, Project Manager, addressed council. Mr. Wilson stated this agreement allows for the City of Durant to deed land over to the Oklahoma Department of Transportation (ODOT) which in turn allows ODOT to work land improvements on Old East Main. The funds for this project are included in the $1.5 Million Dollar Grant. Once the project is completed, the City of Durant would maintain Old East Main. Mr. Wilson recommended approval of this agreement.

Motion was made by Destry Hawthorne and seconded by Chad Hitchcock to approve Oklahoma Department of Transportation (ODOT) Project Agreement CMC Road Improvements. Motion Passed with the following vote:

Ayes: Hawthorne, Hitchcock, Hoffman, Orr, Tomlinson

n. Consider Ordinance #1803 Modification of the Airport Advisory Board

Tabled

Jacque Wilson, Projects Manager, addressed council. Mr. Wilson recommended this item be tabled until further modifications could be made.

Motion was made by Jerry Tomlinson and seconded by Destry Hawthorne to table Item 3(n). Motion Passed with the following vote:

Ayes: Hawthorne, Hitchcock, Hoffman, Orr, Tomlinson

o. Consider Ordinance #1804 Modification of the Cemetery Board

Tabled

Jacque Wilson, Projects Manager, addressed council. Mr. Wilson recommended this item be tabled until further modifications could be made.

Motion was made by Jerry Tomlinson and seconded by Destry Hawthorne to table Item 3(o). Motion Passed with the following vote:

Ayes: Hawthorne, Hitchcock, Hoffman, Orr, Tomlinson

4. Public Hearings

a. Consideration: Approval of a Preliminary Plat for Property Located on Delivery Lane (PC2016-03)

Approved

Marty Cook, Director of Community Development, addressed council and stated this public hearing is to approve the preliminary plat only. This division of property is to facilitate the construction of two commercial structures on Delivery Lane. Planning Commission has approved the plat. Mr. Cook took questions from council. The hearing was opened to the public. There were no questions from the public.

Motion was made by Destry Hawthorne and seconded by Chad Hitchcock to approve preliminary plat for property located on Delivery Lane (PC 2016-03). Motion Passed with the following vote:

Ayes: Hawthorne, Hitchcock, Hoffman, Orr, Tomlinson

5. Information Items

a. Planning Commission Meeting Minutes - May 17, 2016

b. Financial Statements - June 2016

c. Fire Department Monthly Report - July 2016

d. Police Department Monthly Report - June 2016

e. Library Report - July 2016

f. Street Department Report - July 2016

g. Community Development Monthly Report July 2016

h. Human Resources Department Report - July 2016

i. Monthly Emergency Management Report - July 2016

j. Parks Department Monthly Report - July 2016

k. Grants Department Report July 31 2016

l. Utility Department Monthly Report - July 2016

6. Citizen Comments on Non-Agenda Items

Citizens wishing to address the council regarding matters which are not listed on the agenda will be required to sign up no later than 5 minutes prior to the scheduled starting time of the meeting. The sign-in sheet will contain space for citizen's name, address, phone number, and topic to be discussed. In this way, city staff will be able to follow-up on any issues presented if necessary.

There were no citizen comments.

7. Executive Session

a. Consider Executive Session to Discuss Status of Negotiations with Local 3061 International Association of Firefighters Union for FY 2016-17 (This Executive Session Authorized by Title 25, Section B(1) of the Oklahoma State Statutes)

Approved

Motion was made by Stewart Hoffman and seconded by Bill Orr to enter executive session to discuss status of negotiations with Local 3061 International Association of Firefighters Union for FY 2016-17. Motion Passed with the following vote:

Ayes: Hawthorne, Hitchcock, Hoffman, Orr, Tomlinson

Motion was made by Bill Orr and seconded by Destry Hawthorne to re-enter regular session. Motion Passed with the following vote:

Ayes: Hawthorne, Hitchcock, Hoffman, Orr, Tomlinson

b. Consider Action Pursuant to 7(a) Above

No Action Taken

c. Consider Executive Session to Discuss Hiring of City Manager As Authorized by Title 25, Section 307 B(1) of the Oklahoma State Statutes

Approved

Motion was made by Stewart Hoffman and seconded by Bill Orr to enter into executive session to discuss hiring of city manager. Motion Passed with the following vote:

Ayes: Hawthorne, Hitchcock, Hoffman, Orr, Tomlinson

Motion was made by Bill Orr and seconded by Destry Hawthorne to re-enter regular session. Motion Passed with the following vote:

d. Consider Action Pursuant to 7(c) Above

No Action Taken

8. New Business

There was no new business.

ADJOURNMENT

Motion was made by Destry Hawthorne and seconded by Chad Hitchcock to to adjourn meeting. Motion Passed with the following vote:

Ayes: Hawthorne, Hitchcock, Hoffman, Orr, Tomlinson

Agenda Item: 1.b.

The City of Durant

Office of City Clerk

Memorandum

Date: 9/1/2016
To: Mayor and City Council
From: Cynthia J. Price, City Clerk
Re: Consider Approval of Special Called Meeting Minutes of August 17, 2016

Council Information / Action Requested

Approve Special Called Meeting Minutes of August 17, 2016

City Staff Information / Action Follow-up, if Council authorizes this action:

ATTACHMENTS:

Description	Type	Upload Date
Minutes - August 17, 2016	Exhibit	9/1/2016

Agenda posted on Durant City Hall Entry Door at This is to certify that in conformity with the Oklahoma Open Meeting Act, public notice of the date, time and place of this meeting was filed with the City Clerk of Durant on the 9th day of August, 2016 and that an agenda of said meeting was posted at the place of such meeting at 9:00 a.m. on the 16th day of August, 2016.

MINUTES OF THE SPECIAL MEETING OF DURANT CITY Council Special Meeting OF August 17, 2016 AT 5:00 PM, Roscoe J. Hatfield Council Chambers, 300 West Evergreen, Durant, Oklahoma

CALL TO ORDER

Mayor Hoffman called the meeting to order at 5:19 pm.

ROLL CALL

Present: Council Member Chad Hitchcock City Attorney Pat Phelps
Council Member Billy L. Orr Acting City Manager Donnalla Miller
Council Member Jerry Tomlinson City Clerk Cynthia J Price
Vice-Mayor Destry Hawthorne
Mayor Stewart Hoffman (*denotes partial attendance)

Absent: None

Mayor Hoffman declared a quorum.

1. Memorandum of Understanding (C-2016-61) between the City of Durant and Sunstar, LLC

Disapproved

Marty Cook, Director of Community Development, addressed council and stated the agreement between the City and Sunstar, LLC. is to facilitate the construction of drainage for Heritage I. Mr. Cook stated the agreement is intended to be fair trade - their receipts for fees. The easements are already in place. Mr. Cook stated Sunstar, LLC. is ready to begin work upon approval by city council.

Motion was made by Destry Hawthorneand seconded by Chad Hitchcock to approve Memorandum of Understanding (C-2016-61) between the City of Durant and Sunstar, LLC. Motion Failed with the following vote:

Ayes: Hawthorne, Orr
Nays: Hitchcock, Hoffman
Abstain: Tomlinson

2. Consider Approval of Agreement Between Durant Historical Society and City

of Durant FY 2016-2017 (C-2016-64)

Approved

Acting City Manager Donnalla Miller addressed council and stated the terms of the proposed agreement remain unchanged from the agreement for the previous fiscal year. Ms. Miller recommended approval of the proposed agreement.

Motion was made by Jerry Tomlinsonand seconded by Bill Orr to approve agreement between the Durant Historical Society and the City of Durant (C-2016-64). Motion Passed with the following vote:

Ayes: Hawthorne, Hitchcock, Hoffman, Orr, Tomlinson

3. Consider Approval of Contract Extension Agreement for City of Durant and Durant Area Chamber of Commerce (C-2015-27)

Approved

Projects Manager Jacque Wilson addressed council and stated this agreement is for an extension of the previous agreement through September 30, 2016 only. Mr. Wilson stated in discussions with the Chamber, the City of Durant is looking for better ways to apply metrics to this contract and create a better mechanism to work with chamber operations.

Motion was made by Jerry Tomlinsonand seconded by Chad Hitchcock to approve Contract Extension Agreement with City of Durant and Durant Area Chamber of Commerce (C-2015-27). Motion Passed with the following vote:

Ayes: Hawthorne, Hitchcock, Hoffman, Orr, Tomlinson

4. Consider Approval of Contract Extension with City of Durant and Lake Ranger (C-2001-07.01)

Approved

Acting City Manager Donnalla Miller addressed council and stated this agreement is for an extension of the current contract through September 30, 2016 only. Ms. Miller stated the original contract was dated July 10, 2001. The contract needs updating to insure the terms are brought in line.

Motion was made by Jerry Tomlinsonand seconded by Chad Hitchcock to approve contract extension with City of Durant and Lake Ranger (C-2001-07.01). Motion Passed with the following vote:

Ayes: Hawthorne, Hitchcock, Hoffman, Orr, Tomlinson

5. Consider Approval of Ordinance 1793 Amending Chapter 31, Section 31.01(A) and (B)(1) and (B)(2) and (C) of the Durant City Code, Restating Duties of City Clerk

Approved

City Attorney Pat Phelps addressed council and stated Ordinance 1793 is a housekeeping item only. The previous job description of the city clerk included financial duties which were re-assigned to other city departments before the current city clerk assumed her position. Ordinance 1793 more accurately reflects the duties of the current city clerk.

Motion was made by Jerry Tomlinsonand seconded by Bill Orr to approve Ordinance 1793 amending Chapter 31, Section 31.01 (A) and (B)(1) and (B)(2) and(C) of the Durant City Code, restating duties of City Clerk. Motion Passed with the following vote:

Ayes: Hawthorne, Hitchcock, Hoffman, Orr, Tomlinson

6. Consider Approval of Memorandum of Agreement City of Durant and Commercial Metals Company (C-2016-71)

Disapproved

Projects Manager Jacque Wilson addressed council and stated this item was tabled previously as the parties could not reach an agreement as to which party would be responsible for maintenance of the second lift station for perpetuity. Project Engineer Brandon Wall was called before council to answer questions as to the second lift station. Mr. Wall stated the second lift station was not necessary to the operation of Commercial Metals Company. Mr. Wall further stated a second lift station in the location proposed by CMC would not be accessible by future industry but there were alternate locations that could be considered. Robert Weinhoffer, Vice President of Diversified Business and Business Services for Commercial Metals Company, spoke before council as did Tommy Kramer, Executive Director of the Durant Industrial Authority, and Becca Collins, Grant Coordinator for the City of Durant.

Motion was made by Stewart Hoffmanand seconded by Chad Hitchcock to approve Memorandum of Agreement between the City of Durant and Commercial Metals Company (C-2016-71). Motion Failed with the following vote:

Ayes: Hoffman, Orr
Nays: Hawthorne, Hitchcock
Abstain: Tomlinson

Motion was made by Destry Hawthorne to to approve modified Memorandum of Agreement between City of Durant and Commercial Metals Company (C-2016-71) which would remove any reference to second lift station. Motion Died for lack of Second

7. Executive Session

a. Consider Executive Session to Discuss Status of Negotiations With Local 3061 International Association of Firefighters Union for FY 2016-17 (This Executive Session Authorized by Title 25, Section B (2) of the Oklahoma State Statutes)

Approved

Motion was made by Jerry Tomlinsonand seconded by Chad Hitchcock to enter into executive session for items 7a and 7c. Motion Passed with the following vote:

Ayes: Hawthorne, Hitchcock, Hoffman, Orr, Tomlinson

Motion was made by Chad Hitchcockand seconded by Bill Orr to re-enter regular session. Motion Passed with the following vote:

Ayes: Hawthorne, Hitchcock, Hoffman, Orr, Tomlinson

b. Consider Action Pursuant to 8(a) Above

Approved

Motion was made by Jerry Tomlinsonand seconded by Destry Hawthorne to approve Local 3061 International Association of Firefighters Union Contract for FY 2016-17. Motion Passed with the following vote:

Ayes: Hawthorne, Hitchcock, Hoffman, Orr, Tomlinson

c. Consider Executive Session to Discuss Hiring of City Manager (This Executive Session Authorized by Title 25, Section B(1) of the Oklahoma State Statutes)

Approved

Motion was made by Jerry Tomlinsonand seconded by Chad Hitchcock to enter into executive session for items 7a and 7c. Motion Passed with the following vote:

Ayes: Hawthorne, Hitchcock, Hoffman, Orr, Tomlinson

Motion was made by Chad Hitchcockand seconded by Bill Orr to re-enter regular session. Motion Passed with the following vote:

Ayes: Hawthorne, Hitchcock, Hoffman, Orr, Tomlinson

d. Consider Action Pursuant to 8(c) Above

No Action Taken

Adjournment

Motion was made by Jerry Tomlinsonand seconded by Chad Hitchcock to adjourn meeting. Motion Passed with the following vote:

Ayes: Hawthorne, Hitchcock, Hoffman, Orr, Tomlinson

Agenda Item: 1.c.

The City of Durant

Office of City Clerk

Memorandum

Date: 9/1/2016
To: Mayor and City Council
From: Cynthia J. Price, City Clerk
Re: Consider Approval of Special Called Meeting Minutes of August 22, 2016

Council Information / Action Requested

Approve Special Called Meeting Minutes of August 22, 2016

City Staff Information / Action Follow-up, if Council authorizes this action:

ATTACHMENTS:

Description	Type	Upload Date
Minutes - August 22, 2016	Exhibit	9/1/2016

Agenda posted on Durant City Hall Entry Door at This is to certify that in conformity with the Oklahoma Open Meeting Act, public notice of the date, time and place of this meeting was filed with the City Clerk of Durant on the 10th day of August, 2016 and that an agenda of said meeting was posted at the place of such meeting at 4:15 p.m. on the 18th day of August, 2016.

MINUTES OF THE SPECIAL MEETING OF DURANT CITY Council Special Meeting OF August 22, 2016 AT 5:00 PM, Durant City Hall, 300 West Evergreen, Room 112, Durant, Oklahoma

CALL TO ORDER

Mayor Tomlinson called the meeting to order at 5:08 p.m.

ROLL CALL

Present: Council Member Chad Hitchcock City Attorney Pat Phelps
Council Member Billy L. Orr Acting City Manager Donnalla Miller
Council Member Jerry Tomlinson City Clerk Cynthia J Price
Vice-Mayor Destry Hawthorne
Mayor Stewart Hoffman (*denotes partial attendance)

Absent: None

Mayor Hoffman declared a quorum.

1. Executive Session

a. Consider Executive Session to Discuss Hiring of City Manager (This Executive Session Authorized by Title 25, Section B(1) of the Oklahoma State Statutes)

Approved

Motion was made by Chad Hitchcockand seconded by Destry Hawthorne to enter into executive session to discuss hiring of city manager. Motion Passed with the following vote:

Ayes: Hawthorne, Hitchcock, Hoffman, Orr, Tomlinson

Motion was made by Chad Hitchcockand seconded by Destry Hawthorne to enter back into regular session. Motion Passed with the following vote:

Ayes: Hawthorne, Hitchcock, Hoffman, Orr, Tomlinson

b. Consider Action Pursuant to 1(a) Above

No Action Taken

Adjournment

Motion was made by Jerry Tomlinsonand seconded by Chad Hitchcock to adjourn meeting. Motion Passed with the following vote:

Ayes: Hawthorne, Hitchcock, Hoffman, Orr, Tomlinson

Agenda Item: 1.d.

The City of Durant

Office of City Clerk

Memorandum

Date: 9/1/2016
To: Mayor and City Council
From: Cynthia J. Price, City Clerk
Re: Consider Approval of Special Called Meeting Minutes of August 23, 2016

Council Information / Action Requested

Approve Special Called Meeting Minutes of August 23, 2016

City Staff Information / Action Follow-up, if Council authorizes this action:

ATTACHMENTS:

Description	Type	Upload Date
Minutes - August 23, 2016	Exhibit	9/1/2016

Agenda posted on Durant City Hall Entry Door at This is to certify that in conformity with the Oklahoma Open Meeting Act, public notice of the date, time and place of this meeting was filed with the City Clerk of Durant on the 17th day of August, 2016 and that an agenda of said meeting was posted at the place of such meeting at 5:30 p.m. on the 19th day of August, 2016.

MINUTES OF THE SPECIAL MEETING OF DURANT CITY Council Special Meeting OF August 23, 2016 AT 4:45 PM, Roscoe J. Hatfield Council Chambers

CALL TO ORDER

Mayor Hoffman called the meeting to order at 4:53 p.m.

ROLL CALL

Present: Council Member Chad Hitchcock
Council Member Billy L. Orr
Council Member Jerry Tomlinson
Vice-Mayor Destry Hawthorne
Mayor Stewart Hoffman
City Attorney Pat Phelps
Acting City Manager Donnalla Miller
City Clerk Cynthia J Price

Absent: None

(*denotes partial attendance)

Mayor Hoffman declared a quorum.

1. Consider Approval of Memorandum of Understanding Between the City of Durant and Commercial Metals Company (C-2016-71)

   No Action Taken

   Mayor Hoffman stated there will be no action on this matter tonight. Mayor Hoffman stated there have been ongoing negotiations between the City of Durant and Commercial Metals Company. A revised Memorandum and Understanding should be available for consideration in the next week.

2. Consider Ordinance No. 1792, Amending The Code Of Ordinances Of The City Of Durant, Oklahoma, By Adding To Title Iii, “Tourism Tax,” Consisting Of New Sections 37.120 Through 37.148, Inclusive; Levying A Five Percent (5%) Tax Upon The Gross Proceeds Or Gross Receipts Derived From Occupancy Of A Room Or Rooms In This City, With Said Tax To Be Used

For Enhancing And Promoting Tourism Development; Providing Citation And Definitions; Providing For Tax Rate, Exemptions, And Exemption Certificates; Requiring Tax To Be Separately Stated On Bills; Requiring Records To Be Kept; Providing For Tax Returns, Bonds, Assessment, Determination Of Tax, Refunds, And Notices; Providing That Remedies Are Exclusive; Providing General Powers Of The City Clerk; Providing For Administration Of Oaths And Compelling Testimony; Providing For Certificates Of Registration, Interest, And Penalties; Providing For Handling Of Delinquent Taxes; Providing For Collection By Suit; Providing For Use Of Funds; Providing For Confidentiality Of Records; Providing For Proceedings To Collect Tax And Penalties For Failure To Comply With This Article; Providing For Operator's Discount; Providing That Provisions Are Cumulative; Providing For Severability; And Providing Effective Date And Codification

Approved

Mayor Hoffman stated there have been ongoing meetings with hotel owners and the community. Jim Thorpe, Charles Calhoun and Nina Patel were provided the opportunity to address council with their concerns.

Motion was made by Destry Hawthorneand seconded by Chad Hitchcock to approve Ordinance No. 1792 with amendment to Section 20 as printed and the intent will be that the committee shall be appointed by the city council and shall be composed of three members who are owners or operators of hotel operations within the city or their designee, representative of the Durant Industrial Authority, representative of the Durant Area Chamber of Commerce, the Mayor or his/her designee and one member at large to be recommended by city council. Motion Passed with the following vote:

Ayes: Hawthorne, Hitchcock, Hoffman, Orr, Tomlinson

3. Consider Resolution 2016-19 Authorizing The Calling And Holding Of An Election In The City Of Durant, Oklahoma, On The 8th Day Of November, 2016, For The Purpose Of Submitting To The Qualified Electors Of The City Of Durant, Oklahoma, The Question Of Their Approval Or Rejection Of Ordinance No. 1792 Levying A Five Percent (5%) Tax Upon The Gross Proceeds Or Gross Receipts Derived From Occupancy Of A Room Or Rooms In This City; Providing That The Revenues From Such Tax Shall Be Used For Enhancing And Promoting Tourism Development; Providing Effective Date; Providing For Administration And Collection Of Such Tax; Providing The Provisions Are Cumulative; And Providing For Severability.

Approved

Motion was made by Chad Hitchcockand seconded by Destry Hawthorne to approve Resolution 2016-19 Authorizing The Calling And Holding Of An Election In The City Of Durant, Oklahoma, On The 8th Day Of November, 2016, For The Purpose Of Submitting To The Qualified Electors Of The City Of Durant, Oklahoma, The Question Of Their Approval Or Rejection Of Ordinance No. 1792 Levying A Five Percent (5%) Tax Upon The Gross Proceeds Or Gross Receipts Derived From Occupancy Of A Room Or Rooms In This City; Providing That The Revenues From Such Tax Shall Be Used For Enhancing And Promoting Tourism Development; Providing Effective Date; Providing For Administration And Collection Of Such Tax; Providing The Provisions Are Cumulative; And Providing For Severability. Motion Passed with the following vote:

Ayes: Hawthorne, Hitchcock, Hoffman, Orr, Tomlinson

4. Executive Session

a. Consider Entering into Executive Session As Authorized By Title 25 O.S. Section 307 B(1) To Discuss The Hiring Of A City Manager

Approved

Motion was made by Chad Hitchcockand seconded by Destry Hawthorne to enter into executive session to discuss the hiring of a city manager. Motion Passed with the following vote:

Ayes: Hawthorne, Hitchcock, Hoffman, Orr, Tomlinson

Motion was made by Chad Hitchcockand seconded by Destry Hawthorne to re-enter regular session. Motion Passed with the following vote:

Ayes: Hawthorne, Hitchcock, Hoffman, Orr, Tomlinson

b. Consider Action Pursuant To Agenda Item 4a To Discuss The Hiring Of A City Manager

No Action Taken

Adjournment

Motion was made by Chad Hitchcockand seconded by Destry Hawthorne to adjourn meeting. Motion Passed with the following vote:

Ayes: Hawthorne, Hitchcock, Hoffman, Orr, Tomlinson

Agenda Item: 1.e.

The City of Durant

Office of City Clerk

Memorandum

Date: 9/1/2016
To: Mayor and City Council
From: Cynthia J. Price, City Clerk
Re: Consider Approval of Special Called Meeting Minutes of August 30, 2016

Council Information / Action Requested

Approve Special Called Meeting Minutes of August 30, 2016

City Staff Information / Action Follow-up, if Council authorizes this action:

ATTACHMENTS:

Description	Type	Upload Date
Minutes - August 30, 2016	Exhibit	9/1/2016

Agenda posted on Durant City Hall Entry Door at This is to certify that in conformity with the Oklahoma Open Meeting Act, public notice of the date, time and place of this meeting was filed with the City Clerk of Durant on the 25th day of August, 2016 and that an agenda of said meeting was posted at the place of such meeting at 3:45 p.m. on the 29th day of August, 2016.

MINUTES OF THE SPECIAL MEETING OF DURANT CITY Council Special Meeting OF August 30, 2016 AT 4:00 PM, Roscoe J. Hatfield Council Chambers, 300 West Evergreen, Durant, Oklahoma

CALL TO ORDER

Mayor Hoffman called the meeting to order at 4:37 P.M.

ROLL CALL

Present: Council Member Chad Hitchcock City Attorney Pat Phelps
Council Member Billy L. Orr Acting City Manager Donnalla Miller
Council Member Jerry Tomlinson City Clerk Cynthia J Price
Vice-Mayor Destry Hawthorne
Mayor Stewart Hoffman (*denotes partial attendance)

Absent: None

Mayor Hoffman declared a quorum.

1. Consider Approval of Special Event Permit Application for 5K Run on September 17, 2016 Held By Boys and Girls Club

Approved

Motion was made by Jerry Tomlinsonand seconded by Chad Hitchcock to approve Special Event Permit Application for 5K Run on September 17, 2016 held by Boys and Girls Club. Motion Passed with the following vote:

Ayes: Hawthorne, Hitchcock, Hoffman, Orr, Tomlinson

2. Consider Approval of Request for Authorization to Provide Cardinal Glass Pump Station Upgrade (RFAP #2016-162)

Approved

Steve Gray, Water Treatment Plan Superintendent, addressed council and stated this is a budgeted item. The pump upgrade would be from 800 gallons per minute to 1,400 gallons per minute.

Motion was made by Jerry Tomlinsonand seconded by Chad Hitchcock to approve Request for Authorization to Purchase Cardinal Glass Pump Station Upgrade (RFAP #2016-162) to MVA Services LLC. Motion Passed with the following vote:

Ayes: Hawthorne, Hitchcock, Hoffman, Orr, Tomlinson

3. Consider Approval of Memorandum of Understanding C-2016-61.

Between the City of Durant and Sunstar, LLC.

Approved

Marty Cook, Community Development Director, addressed council. Vice Mayor Hawthorne proposed amendments to the Memorandum of Understanding which would be an alternative to the flume.

Mayor Hoffman stated that language has already been added stating the total cost is the maximum limit of the agreement and the lesser cost will be discovered through presentation of receipts and become the maximum limit of the agreement and no credits would be given until the receipts are in hand.

Motion was made by Destry Hawthorneand seconded by Chad Hitchcock to to approve the Memorandum of Understanding Between the City of Durant and Sunstar, LLC (C-2016-061) with the following changes: Page 2 of 5, Line 6 - after the word 'event' to state 'or an alternative engineered system which could include underground infrastructure as approved by the city'; Page 3 of 5, 3rd Paragraph, Line 4 - strike the words 'not' and 'or structures'. Motion Passed with the following vote:

Ayes: Hawthorne, Hitchcock, Hoffman, Orr, Tomlinson

4. Executive Session

a. Consider Executive Session to Discuss Hiring of City Manager (This Executive Session Authorized by Title 25, Section B(1) of the Oklahoma State Statutes

Approved

Motion was made by Destry Hawthorneand seconded by Chad Hitchcock to enter executive session. Motion Passed with the following vote:

Ayes: Hawthorne, Hitchcock, Hoffman, Orr, Tomlinson

Motion was made by Chad Hitchcockand seconded by Destry Hawthorne to re-enter regular session. Motion Passed with the following vote:

Ayes: Hawthorne, Hitchcock, Hoffman, Orr, Tomlinson

b. Consider Action Pursuant to 4(a) Above

No Action Taken

Adjournment

Motion was made by Chad Hitchcockand seconded by Destry Hawthorne to adjourn meeting. Motion Passed with the following vote:

Ayes: Hawthorne, Hitchcock, Hoffman, Orr, Tomlinson

Agenda Item: 1.f.

The City of Durant

Office of City Clerk

Memorandum

Date: 9/1/2016
To: Mayor and City Council
From: Cynthia J. Price, City Clerk
Re: Consider Approval of Special Called Meeting Minutes of August 31, 2016

Council Information / Action Requested

Approve Special Called Meeting Minutes of August 31, 2016

City Staff Information / Action Follow-up, if Council authorizes this action:

ATTACHMENTS:

Description	Type	Upload Date
Minutes - August 31, 2016	Exhibit	9/1/2016

Agenda posted on Durant City Hall Entry Door at This is to certify that in conformity with the Oklahoma Open Meeting Act, public notice of the date, time and place of this meeting was filed with the City Clerk of Durant on the 25th day of August, 2016 and that an agenda of said meeting was posted at the place of such meeting at 4:21 p.m. on the 30th day of August, 2016.

MINUTES OF THE SPECIAL MEETING OF DURANT CITY Council Special Meeting OF August 31, 2016 AT 4:45 PM, Roscoe J. Hatfield Council Chambers, 300 West Evergreen, Durant, Oklahoma

CALL TO ORDER

Mayor Hoffman called the meeting to order at 5:05 p.m.

ROLL CALL

Present: Council Member Chad Hitchcock*
Council Member Jerry Tomlinson
Vice-Mayor Destry Hawthorne
Mayor Stewart Hoffman
City Attorney Pat Phelps
Acting City Manager Donnalla Miller
City Clerk Cynthia J. Price

Absent: Council Member Bill Orr

(*denotes partial attendance)

Mayor Hoffman declared a quorum.

1. Consider Approval of Memorandum of Understanding Between the City of Durant and Commercial Metals Company (C-2016-71)

Approved

Jacque Wilson, Projects Manager, addressed council and stated this Memorandum of Understanding speaks to maintenance, post-construction of infrastructure for water and sewer and also defines the actual construction of the building using the Community Development Block Grant. Mr. Wilson recommended approval of the Memorandum of Understanding. Council Member Tomlinson stated he appreciated the efforts of Projects Manager Jacque Wilson, Acting City Manager Donnalla Miller and Commercial Metals Company to reach this agreement.

Motion was made by Jerry Tomlinsonand seconded by Destry Hawthorne to approve Memorandum of Understanding between the City of Durant and Commercial Metals Company (C-2016-71). Motion Passed with the following vote:

Ayes: Hawthorne, Hoffman, Tomlinson

Absent: Hitchcock, Orr

2. Executive Session

a. Consider Executive Session to Discuss Hiring of City Manager (This Executive Session Authorized by Title 25, Section B(1) of the Oklahoma State Statutes

Approved

Motion was made by Destry Hawthorneand seconded by Jerry Tomlinson to to enter executive session to discuss the hiring of a city manager. Motion Passed with the following vote:

Ayes: Hawthorne, Hoffman, Tomlinson

Absent: Hitchcock, Orr

Motion was made by Destry Hawthorneand seconded by Chad Hitchcock to re-enter regular session. Motion Passed with the following vote:

Ayes: Hawthorne, Hitchcock, Hoffman, Tomlinson

Absent: Orr

b. Consider Action Pursuant to 2(a) Above

No Action Taken

Adjournment

Motion was made by Chad Hitchcockand seconded by Destry Hawthorne to adjourn meeting. Motion Passed with the following vote:

Ayes: Hawthorne, Hitchcock, Hoffman, Tomlinson

Absent: Orr

Agenda Item: 1.g.

The City of Durant

Office of City Clerk

Memorandum

Date:	9/2/2016
To:	Mayor and City Council
From:	Cynthia J. Price, City Clerk
Re:	Consider Approval of Special Event Permit Application by Destry Hawthorne for Halloween Trick or Treat Event (SEP-2016-030)

This will be the second year that this event has been held and a request made for street closures.

This Special Event Permit Application was presented to Police Chief Houser, Fire Chief Joines, Street Department Superintendent James Young, and Solid Waste Collection Superintendent Albert Pierce for review and received unanimous approval upon agreement regarding parking.

Council Information / Action Requested

Approve or Deny Special Event Permit Application (SEP-2016-032) for Halloween Trick or Treat Event

City Staff Information / Action Follow-up, if Council authorizes this action:

City Clerk - Notify event organizer of council decision.

ATTACHMENTS:

Description	Type	Upload Date
SEP-2016-32 Application	Exhibit	9/7/2016
Event Map	Exhibit	9/2/2016

SEP No.: 2016-032

DURANT
· OKLAHOMA ·

Special Event Permit Application

Return Completed Application to City Clerk

♦City Hall Room 103♦300 W. Evergreen St.♦

PO Box 578 Durant, OK 74702

General Information

- Event organizers are required to register all public special events (outdoor festivals, walks/runs, parades, carnivals, tournaments, etc.) with the City of Durant.
- Organizers must submit the Special Event Permit Application form a ***minimum of 60 days prior*** to the event.
- Please do not assume that all aspects of the event will be approved. You may be asked to make some changes to your plan based on the availability of services and scheduling of other events.
- All applications must be signed. Those applications not signed will be considered incomplete and will not be processed. Upon approval of your event, you will receive written or electronic notification of confirmation.

Location

Name of Event: Halloween Trick or Treat

Type of Event: ☐Run/Walk ☐Bicycle ☐Parade ☐Sporting Event ☐Tailgate Party ☐Festival

☐Motorcycle Ride ☐Concert ☐Wedding ☐Car Show ☒other: Halloween Trick or Treat

Choose pre-designated Run/Walk route: ☐ Route 1 ☐Route 2 ☐Route 3 ☒N/A

Choose pre-designated Parade route: ☐ Route 1 ☐Route 2 ☐Route 3 ☒N/A

Location of Event: Remington Hills Address of Event: Remington Hills

Event located at a City facility or park? ☒ Yes ☐ No General public invited? ☒ Yes ☐ No

Sponsoring Organization

Organization/Group/Individual Name: Destry Hawthorne/Chad Hitchcock

Is organization Non-Profit or For-Profit? ☐Non-Profit ☐For-Profit

Primary Contact Person: Destry Hawthorne Phone: 903-821-2156 Email: dhawthorne@durant.org

Secondary Contact Person: Phone: Email:

Fundraiser? ☐ Yes ☒ No Organization to Benefit from Proceeds: N/A

SEP No.: 2016-032

Event Summary

Set Up Date: 10/31/2016 | Set Up Time: 4:00pm

Event Start Date: 10/31/2016 | Event Start Time: 5:00pm

Event End Date: 10/31/2016 | Event End Time: 9:00pm

Dismantle Date: 10/31/2016 | Dismantle Time: 9:00pm

Expected Attendance: Unk | Admission/Registration Fee for public: N/A

Special arrangements necessary for:

Dumpsters ☐ Yes ☒ No | Detail:

Trash Receptacles ☐ Yes ☒ No | Detail:

Water Service ☐ Yes ☒ No | Detail:

Electrical Service ☐ Yes ☒ No | Detail:

Restroom Facilities ☐ Yes ☒ No | Detail:

Site Cleanup ☐ Yes ☒ No | Detail:

Food Sales/Service ☐ Yes ☒ No | Detail:

Beverage Sales/Service ☐ Yes ☒ No | Detail:

Will there be an event stage? ☐ Yes ☒ No | Will tents be used on-site? ☐ Yes ☒ No

Have adjacent property/business owners been notified? ☒ Yes ☐ No

Site Plan

☒Attach a site plan to the application. Application is not complete without a site plan.

- Outline of the entire event venue including the names of all streets or areas that are part of the venue and the surrounding area.
- If the event involves a moving route of any kind, indicate the direction of travel and all street or lane closures. Describe any kind of signage to be used.
- The location of fencing, barriers and/or barricades.
- The location of all stages, platforms, scaffolding, bleachers, grandstands, canopies, tents, portable toilets, booths, cooking areas, trash containers and dumpsters and any other temporary structures. Include source or provider for each one.
- Generator locations and/or source of electricity

SEP No.: 2016-032

Food/Beverage/Sales

Will there be sales associated with the event? ☐ Yes ☒ No

Are you charging vendors for participating or booths? ☐ Yes ☒ No If "yes", Amount?

Will alcoholic beverages or low point beer be served or sold at the event? ☐ Yes ☒ No

If "yes", check all that apply: ☐Free/Host alcohol ☐Sale of alcohol ☐Beer ☐Liquor ☐Beer & liquor

Did you obtain an alcohol license or permit? ☐ Yes ☒ No

Will food be prepared in the event area? ☐ Yes ☒ No

Have all county health department permits been obtained? ☐ Yes ☒ No

Note: Other permits from the City of Durant, Bryan County or State of Oklahoma may be required. Please review the section in the guidelines for additional information. An application to the Oklahoma Tax Commission for a special event permit at least twenty (20) days prior to the event is required per O.S. Title 68 Section 1364.2.

Traffic and Parking

Normal traffic flow to be disrupted? ☒ Yes ☐ No Street closing(s) requested? ☒ Yes ☐ No

Is there a need for traffic control from our Police Department? ☐ Yes ☒ No

Parking arrangements necessary? ☒ Yes ☐ No On-site parking control? ☐ Yes ☐ No

If "yes", indicate the following on the attached site plan: proposed area detailing names of all streets, time frame involved, requested street closure(s), entry and exit for event traffic and/or pedestrian crossings, type of traffic control requested, and possible impact on traffic patterns. Describe how the route will be marked and the type of police service is needed (ie. front escort, rear escort, traffic control, security). Describe parking arrangements and/or on-site parking control.

Security/Medical

Will this event require Event Security? ☐ Yes ☒ No On-site Medical/First Aid care? ☐ Yes ☒ No

Will the event involve any type of fireworks or pyrotechnics? ☐ Yes ☒ No

Will there be any type of hazardous materials on-site during the event? ☐ Yes ☒ No

Will the event involve any type of firearms or replica firearms? ☐ Yes ☒ No

If "yes", indicate the following on the attached site plan: description of proposed type of event security and list type of direct communication equipment to be used; outline of on-site medical/first aid care to be provided; details related to fireworks and/or pyrotechnics (including what will be utilized and by whom); and explain how firearms (replica or otherwise) are involved with the event. Attach material safety data sheets for any hazardous material on-site during the event. Note: the City of Durant may impose requirements for event security based on the type of event, anticipated crowds, location or other factors.

SEP No.: 2016-032

Assurance

I certify that the information contained in the foregoing application is true and correct to the best of my knowledge and belief that I have read, understand and agree to abide by the rules and regulations governing the proposed Special Event under the City of Durant Municipal Code. Host Organization will be responsible for any damages to city equipment or facilities. Applicant agrees to comply with all other requirements of the City, County, State and any other applicable entity which may pertain to the use of the Event venue and the conduct of the Event. In the event that a possessory interest subject to property taxation is created by virtue of this use permit, I agree to pay all possessory interest taxes and the City shall not be liable for the payment of such taxes. I further agree that the payment of any such taxes shall not reduce any consideration paid to the City pursuant to this use permit. I agree to abide by these rules, and further certify that I, on behalf of the Host Organization, am also authorized to commit that organization, and therefore agree to be financially responsible for any costs and fees that may be incurred by or on behalf of the Event to the City of Durant.

Street closings will require approved traffic control devices including barricades and signs. State Law requires that in most cases, state certified police officers must be used for traffic control on public streets **The cost to provide any services shall be paid in advance** including, but not limited to traffic control devices or services provided by the Durant Police Department.

Applicant Name: Destry Hawthorne Application Date: 09/06/2016

Applicant Signature: _____

Checklist

Thank you for completing your Special Event Permit Application. Before you submit your application to the City of Durant, please make sure that the following steps have been completed.

Have you?

- ☒ Signed and dated your application
- ☒ Attached your event site plan including any applicable traffic, security, or parking plans
- ☐ Attached a list of your vendors and a copy of applicable health permits
- ☐ Attached a Certificate of Insurance
- ☐ Attached a copy of your IRS 501(c) tax exemption letter
- ☐ Included and attached any Bryan County, State, or City permits that may be required

Return Completed Application to DURANT CITY CLERK
♦City Hall Room 103♦300 W. Evergreen St.♦
PO Box 578 Durant, OK 74702

Reviewed: POLICE_____ FIRE _____ STREET_____ SANITATION_____

Approved: POLICE_____ FIRE _____ STREET_____ SANITATION_____

Road closed @ Weatherby & Wilson and Browning & Wilson

Road closed on University @ the CCC West entrance
No through traffic @ Kimberly and N. 49th

SEP-2016-032

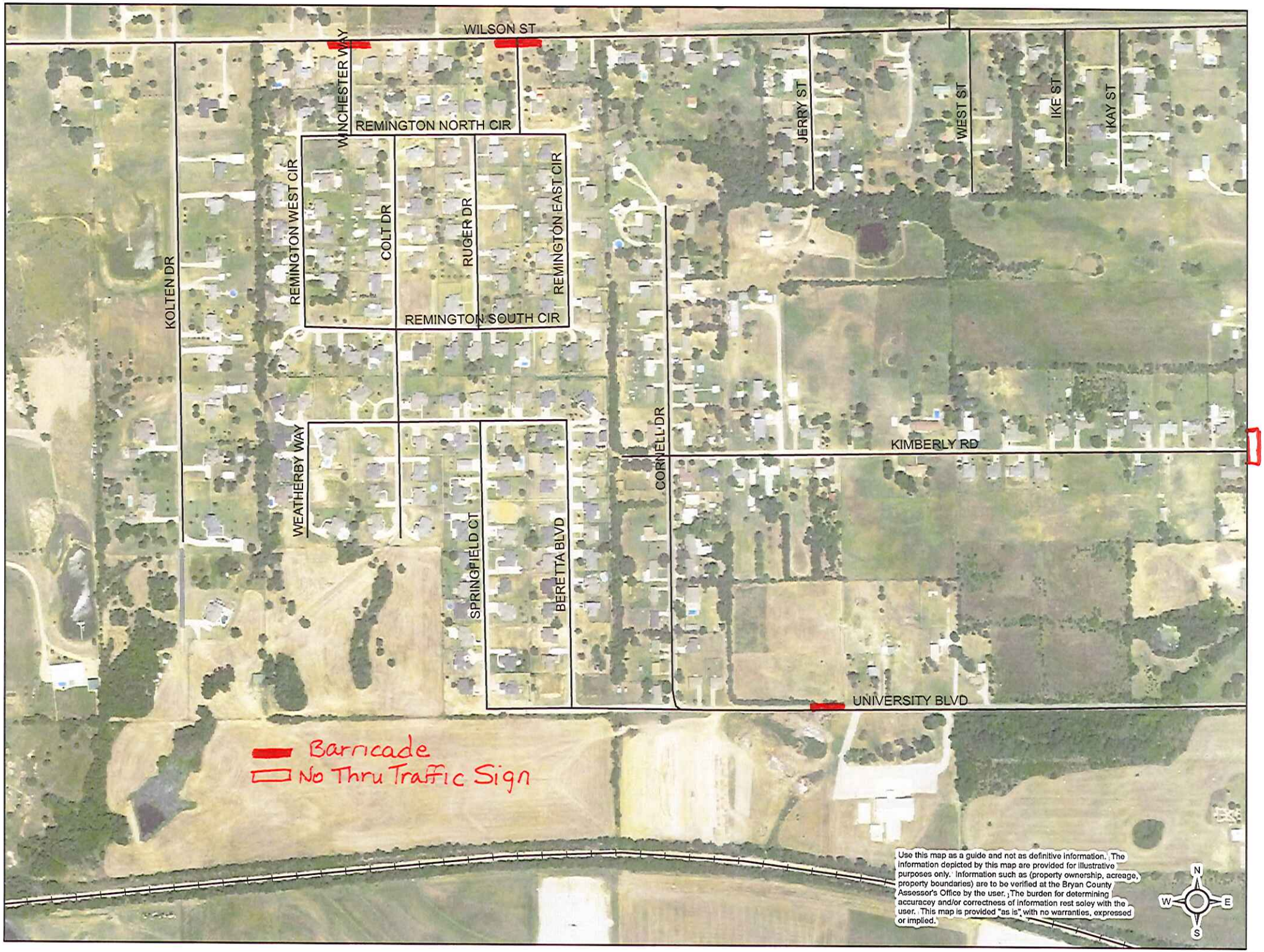
WILSON ST
WINCHESTER WAY
REMINGTON NORTH CIR
REMINGTON WEST CIR
COLT DR
RUGER DR
REMINGTON EAST CIR
REMINGTON SOUTH CIR
KOLTEN DR
WEATHERBY WAY
SPRINGFIELD CT
BERETTA BLVD
CORNELL DR
JERRY ST
WEST ST
IKE ST
KAY ST
KIMBERLY RD
UNIVERSITY BLVD
Barricade
No Thru Traffic Sign
Use this map as a guide and not as definitive information. The information depicted by this map are provided for illustrative purposes only. Information such as (property ownership, acreage, property boundaries) are to be verified at the Bryan County Assessor's Office by the user. The burden for determining accuracy and/or correctness of information rest soley with the user. This map is provided "as is" with no warranties, expressed or implied.
N
W
E
S

Agenda Item: 1.h.

The City of Durant

Office of City Clerk

Memorandum

Date: 9/2/2016
To: Mayor and City Council
From: Cynthia J. Price, City Clerk
Re: Consider Approval of Special Called Meeting Minutes of September 1, 2016

Council Information / Action Requested

Approve Special Called Meeting Minutes of September 1, 2016

City Staff Information / Action Follow-up, if Council authorizes this action:

ATTACHMENTS:

Description	Type	Upload Date
Minutes - September 1, 2016	Exhibit	9/2/2016

Agenda posted on Durant City Hall Entry Door at This is to certify that in conformity with the Oklahoma Open Meeting Act, public notice of the date, time and place of this meeting was filed with the City Clerk of Durant on the 25th day of August, 2016 and that an agenda of said meeting was posted at the place of such meeting at 2:26 p.m.on the 31st day of August, 2016.

MINUTES OF THE SPECIAL MEETING OF DURANT CITY Council Special Meeting OF September 1, 2016 AT 4:45 PM, Roscoe J. Hatfield Council Chambers, 300 West Evergreen, Durant, Oklahoma

CALL TO ORDER

Mayor Hoffman called the meeting to order at 4:58 p.m.

ROLL CALL

Present: Council Member Billy L. Orr*
Council Member Chad Hitchcock
Council Member Jerry Tomlinson
Vice-Mayor Destry Hawthorne
Mayor Stewart Hoffman
City Attorney Pat Phelps
Acting City Manager Donnalla Miller
City Clerk Cynthia J Price

Absent: None

* denotes partial attendance

Mayor Hoffman declared a quorum.

1. Consider Granting Permanent Electrical Utility Easement (PID 11) to OG&E

   No Action Taken

2. Consider Granting of Permanent Electrical Utility Easement (PID 46) to OG&E

   Approved

   Jacque Wilson, Projects Manager, addressed council. Mr. Wilson presented a map and answered questions from council regarding location.

   Motion was made by Jerry Tomlinsonand seconded by Chad Hitchcock to grant permanent electrical utility easement (PID 46) to OG&E. Motion Passed with the following vote:

   Ayes: Hawthorne, Hitchcock, Hoffman, Tomlinson

Absent: Orr

3. Executive Session

a. Consider Executive Session to Discuss Hiring of City Manager (This Executive Session Authorized by Title 25, Section B(1) of the Oklahoma State Statutes

Approved

Motion was made by Chad Hitchcockand seconded by Destry Hawthorne to enter executive session to consider hiring of city manager. Motion Passed with the following vote:

Ayes: Hawthorne, Hitchcock, Hoffman, Tomlinson

Absent: Orr

Motion was made by Chad Hitchcockand seconded by Destry Hawthorne to re-enter regular session. Motion Passed with the following vote:

Ayes: Hawthorne, Hitchcock, Hoffman, Orr, Tomlinson

b. Consider Action Pursuant to 3(a) Above

No Action Taken

Adjournment

Motion was made by Destry Hawthorneand seconded by Chad Hitchcock to adjourn meeting. Motion Passed with the following vote:

Ayes: Hawthorne, Hitchcock, Hoffman, Orr, Tomlinson

Agenda Item: 1.i.

The City of Durant

Office of City Clerk

Memorandum

Date: 9/1/2016
To: Mayor and City Council
From: Cynthia J. Price, City Clerk
Re: Consider Approval of Claims for August 2016

Council Information / Action Requested

Approve claims for August 2016

City Staff Information / Action Follow-up, if Council authorizes this action:

ATTACHMENTS:

Description	Type	Upload Date
Payroll Claims Summary - August 2016	Exhibit	9/1/2016
Regular Department Register - August 2016	Exhibit	9/7/2016
Off Cycle Department Register - August 2016	Exhibit	9/7/2016

PAYROLL CLAIMS SUMMARY
AS OF: AUGUST 31ST, 2016

001-GENERAL FUND

	ANNUAL BUDGET	CURRENT PERIOD	Y-T-D ACTUAL	% OF BUDGET	Y-T-D ENCUMB.	BUDGET BALANCE
SALARIES AND BENEFITS						
CITY ADMINISTRATION	503,128.00	22,114.60	45,461.18	9.04	0.00	457,666.82
CITY CLERK	143,231.00	8,136.28	15,548.57	10.86	0.00	127,682.43
CITY TREASURER	167,893.00	14,448.02	27,710.78	16.51	0.00	140,182.22
LEGAL SERVICES-ATTORNEY	41,737.00	0.00	193.54	0.46	0.00	41,543.46
LAW ENFORCEMENT (PD)	3,771,623.00	284,328.72	535,357.61	14.19	0.00	3,236,265.39
ANIMAL CONTROL (PD)	83,641.00	6,244.21	11,944.39	14.28	0.00	71,696.61
FINANCE DEPARTMENT	80,590.00	9,991.05	20,994.73	26.05	0.00	59,595.27
FIRE DEPARTMENT	2,740,117.00	199,404.01	374,660.81	13.67	0.00	2,365,456.19
PARKS, REC. & GEN. SVCS.	557,380.00	40,057.53	75,979.36	13.63	0.00	481,400.64
SWIMMING POOL	67,879.00	17,779.20	41,582.79	61.26	0.00	26,296.21
MUNICIPAL COURT	87,425.00	5,467.29	11,072.22	12.66	0.00	76,352.78
COMMUNITY DEVELOPMENT	346,808.00	25,022.18	47,175.67	13.60	0.00	299,632.33
PUBLIC LIBRARY	428,974.00	30,645.37	58,526.60	13.64	0.00	370,447.40
STREET DEPARTMENT	614,420.00	45,249.08	86,139.22	14.02	0.00	528,280.78
CIVIL EMERGENCY MGMT.	197,699.00	15,046.46	29,771.47	15.06	0.00	167,927.53
GENERAL GOVERNMENT	200,000.00	0.00	0.00	0.00	0.00	200,000.00
CITY GARAGE	214,970.00	16,290.34	31,495.74	14.65	0.00	183,474.26
TOTAL SALARIES AND BENEFITS	10,247,515.00	740,224.34	1,413,614.68	13.79	0.00	8,833,900.32

PAYROLL CLAIMS SUMMARY
AS OF: AUGUST 31ST, 2016

010-INFO. TECH. SERVICE FUND

	ANNUAL BUDGET	CURRENT PERIOD	Y-T-D ACTUAL	% OF BUDGET	Y-T-D ENCUMB.	BUDGET BALANCE
SALARIES AND BENEFITS						
INFO. TECH. SERVICE FUND	158,919.00	13,130.51	23,907.77	15.04	0.00	135,011.23
TOTAL SALARIES AND BENEFITS	158,919.00	13,130.51	23,907.77	15.04	0.00	135,011.23

PAYROLL CLAIMS SUMMARY
AS OF: AUGUST 31ST, 2016

020-DURANT INDUSTRIAL AUTH.

	ANNUAL BUDGET	CURRENT PERIOD	Y-T-D ACTUAL	% OF BUDGET	Y-T-D ENCUMB.	BUDGET BALANCE
SALARIES AND BENEFITS						
ECON. DEV. ADMIN.	230,459.00	17,332.37	34,169.01	14.83	0.00	196,289.99
TOTAL SALARIES AND BENEFITS	230,459.00	17,332.37	34,169.01	14.83	0.00	196,289.99

PAYROLL CLAIMS SUMMARY
AS OF: AUGUST 31ST, 2016

101-SPECIAL 911 TAX FUND

	ANNUAL BUDGET	CURRENT PERIOD	Y-T-D ACTUAL	% OF BUDGET	Y-T-D ENCUMB.	BUDGET BALANCE
SALARIES AND BENEFITS						
PD COMM CENTER	702,426.00	45,438.40	85,454.38	12.17	0.00	616,971.62
TOTAL SALARIES AND BENEFITS	702,426.00	45,438.40	85,454.38	12.17	0.00	616,971.62

PAYROLL CLAIMS SUMMARY
AS OF: AUGUST 31ST, 2016

405-DURANT UTILITIES AUTH.

	ANNUAL BUDGET	CURRENT PERIOD	Y-T-D ACTUAL	% OF BUDGET	Y-T-D ENCUMB.	BUDGET BALANCE
SALARIES AND BENEFITS						
PUBLIC WORKS ADMINISTRATI	98,409.00	3,562.80	3,687.80	3.75	0.00	94,721.20
UTILITY BILLING	159,974.00	11,186.88	21,550.80	13.47	0.00	138,423.20
WATER/SEWER LINE MAINT.	507,235.00	38,400.19	75,597.89	14.90	0.00	431,637.11
WATER TREATMENT PLANT	371,770.00	27,727.94	54,074.25	14.55	0.00	317,695.75
WASTEWATER TREATMENT	331,065.00	25,024.18	48,702.75	14.71	0.00	282,362.25
COLLECTION - SOLID WASTE	699,940.00	49,148.70	98,146.48	14.02	0.00	601,793.52
UTILITY GENERAL ADMIN.	351,787.00	0.00	0.00	0.00	0.00	351,787.00
DISPOSAL - SOLID WASTE	267,247.00	23,363.98	45,000.98	16.84	0.00	222,246.02
TOTAL SALARIES AND BENEFITS	2,787,427.00	178,414.67	346,760.95	12.44	0.00	2,440,666.05

PAYROLL CLAIMS SUMMARY
AS OF: AUGUST 31ST, 2016

500-MULTI-SPORTS COMPLEX

	ANNUAL BUDGET	CURRENT PERIOD	Y-T-D ACTUAL	% OF BUDGET	Y-T-D ENCUMB.	BUDGET BALANCE
SALARIES AND BENEFITS						
RECREATIONAL MARKETING	69,875.00	4,224.35	8,734.10	12.50	0.00	61,140.90
DURANT MULTI-SPORT COMP	269,179.00	19,948.88	38,962.72	14.47	0.00	230,216.28
TOTAL SALARIES AND BENEFITS	339,054.00	24,173.23	47,696.82	14.07	0.00	291,357.18

PAYROLL CLAIMS SUMMARY
AS OF: AUGUST 31ST, 2016

610-CEMETERY OPERATIONS FUND

	ANNUAL BUDGET	CURRENT PERIOD	Y-T-D ACTUAL	% OF BUDGET	Y-T-D ENCUMB.	BUDGET BALANCE
SALARIES AND BENEFITS						
HIGHLAND CEMETERY	61,166.00	0.00	1,328.07	2.17	0.00	59,837.93
TOTAL SALARIES AND BENEFITS	61,166.00	0.00	1,328.07	2.17	0.00	59,837.93

PACKET: 08171 AP CLAIMS 09/14/2016
VENDOR SET: 01
FUND : 001 GENERAL FUND
DEPARTMENT: N/A NON-DEPARTMENTAL BANK: 601
BUDGET TO USE: CB-CURRENT BUDGET

VENDOR	NAME	ITEM #	G/L ACCOUNT NAME	DESCRIPTION	CHECK#	AMOUNT
01-1	MISCELLANEOUS VENDOR					
	DARBY DANIEL	I-07.09.16	001-000-331.10-01	POOL RENTAL F DARBY DANIEL: POOL REFUND	164681	100.00
	CHRISTINA BRUCE	I-08.06.16	001-000-331.10-01	POOL RENTAL F CHRISTINA BRUCE: POOL REFUND	164665	150.00
	AMBER REYES	I-08.13.16	001-000-331.10-01	POOL RENTAL F AMBER REYES: POOL REFUND	164636	100.00
				DEPARTMENT NON-DEPARTMENTAL TOTAL:		350.00

PACKET: 08171 AP CLAIMS 09/14/2016
VENDOR SET: 01
FUND : 001 GENERAL FUND
DEPARTMENT: 001 CITY ADMINISTRATION BANK: 601
BUDGET TO USE: CB-CURRENT BUDGET

VENDOR NAME	ITEM #	G/L ACCOUNT NAME	DESCRIPTION	CHECK#	AMOUNT
01-002242 JP MORGAN CHASE - BANK					
	I-2503-1554-0816	001-001-513.50-57	MEMBERSHIPS & IPMA-HR AGENCY MEMBERSHIP	000000	318.00
	I-2503-1554-0816	001-001-513.30-32	FREIGHT & POS BLANKET PO FOR HR POSTAGE	000000	4.51
	I-2521-7989-0816	001-001-513.30-32	FREIGHT & POS POSTAL CHARGES	000000	22.95
	I-2521-7989-0816	001-001-513.70-77	MISC. MEETING COUNCIL MEMBERS LUNCH 7/25/19	000000	37.25
	I-2523-6708-0816	001-001-513.50-51	OFFICE SUPPLI MARKERS, PENS	000000	14.20
01-003248 FIVE STAR OFFICE SUPPLY					
	I-0214218-001	001-001-513.50-51	OFFICE SUPPLI OFFICE SUPPLIES	164720	36.10
01-004143 TOUCHTONE COMMUNICATION					
	I-08/2016-809247222	001-001-513.30-31	PHONE & TELEC LONG DISTANCE CHGS ADMIN	164851	8.65
	I-08/2016-809247222	001-001-513.30-31	PHONE & TELEC LONG DISTANCE COMMON COST	164851	29.13
01-005783 PAUL S. BUNTZ					
	I-3	001-001-513.30-51	CONTRACT LABO CONSULTING SERVICES	164801	9,887.25

DEPARTMENT 001 CITY ADMINISTRATION TOTAL: 10,358.04

PACKET: 08171 AP CLAIMS 09/14/2016
VENDOR SET: 01
FUND : 001 GENERAL FUND
DEPARTMENT: 002 CITY CLERK DEPARTMENT BANK: 601
BUDGET TO USE: CB-CURRENT BUDGET

VENDOR	NAME	ITEM #	G/L ACCOUNT NAME	DESCRIPTION	CHECK#	AMOUNT
01-000540	AT&T					
		I-08/2016-7608 1	001-002-514.30-31	PHONE & TELEC CITY CLERK	164637	11.40
01-001169	PITNEY BOWES GLOBAL FIN					
		I-3301219536	001-002-514.30-32	FREIGHT AND P 9 MONTHS POSTAGE	164804	202.04
01-003100	FUELMAN OF SOUTHERN OKL					
		I-08/2016-BG159577	001-002-514.50-64	FUEL IT/CITY CLERK-FUEL	000000	0.00
01-004143	TOUCHTONE COMMUNICATION					
		I-08/2016-809247222	001-002-514.30-31	PHONE & TELEC LONG DISTANCE CHGS FINANCE	164851	16.09
				DEPARTMENT 002 CITY CLERK DEPARTMENT TOTAL:		229.53

PACKET: 08171 AP CLAIMS 09/14/2016
VENDOR SET: 01
FUND : 001 GENERAL FUND
DEPARTMENT: 003 CITY TREASURER DEPT. BANK: 601
BUDGET TO USE: CB-CURRENT BUDGET

VENDOR NAME	ITEM #	G/L ACCOUNT NAME	DESCRIPTION	CHECK#	AMOUNT
01-000540 AT&T					
	I-08/2016-7608 1	001-003-515.30-31	PHONE & TELEC TREASURER	164637	0.00
01-002242 JP MORGAN CHASE - BANK					
	I-2290-3763	001-003-515.70-72	TRAINING AND LODGING EXPENSE	000000	105.73
01-003248 FIVE STAR OFFICE SUPPLY					
	I-0214163-001	001-003-515.50-51	OFFICE SUPPLI BLANKET PO	164720	124.48
	I-0214263-001	001-003-515.50-51	OFFICE SUPPLI BLANKET PO	164720	169.86
01-004143 TOUCHTONE COMMUNICATION					
	I-08/2016-809247222	001-003-515.30-31	PHONE & TELEC LONG DISTANCE CHGS TREAS	164851	0.52
01-005218 MICHELLE HALL					
	I-08.18.16	001-003-515.70-72	TRAINING AND MILEAGE REIMBURSEMENT	164732	176.04
			DEPARTMENT 003 CITY TREASURER DEPT. TOTAL:		576.63

PACKET: 08171 AP CLAIMS 09/14/2016
VENDOR SET: 01
FUND : 001 GENERAL FUND
DEPARTMENT: 004 LEGAL SERVICES-ATTORNEY BANK: 601
BUDGET TO USE: CB-CURRENT BUDGET

VENDOR	NAME	ITEM #	G/L ACCOUNT NAME	DESCRIPTION	CHECK#	AMOUNT
01-003190	P.L. PAT PHELPS					
		I- 1612	001-004-516.30-77	INTERNAL LEGA LEGAL SERVICES	164803	4,550.00
		I-1611	001-004-516.50-56	LEGAL SUBSCRI LEGAL FORM SUBSCRIPTIONS	164803	120.78
				DEPARTMENT 004 LEGAL SERVICES-ATTORNEY TOTAL:		4,670.78

PACKET: 08171 AP CLAIMS 09/14/2016
VENDOR SET: 01
FUND : 001 GENERAL FUND
DEPARTMENT: 005 POLICE - LAW ENFORCEMENT BANK: 601
BUDGET TO USE: CB-CURRENT BUDGET

VENDOR NAME	ITEM #	G/L ACCOUNT NAME	DESCRIPTION	CHECK#	AMOUNT
01-000072 A-ONE INC					
	I-2016 CONFERENCE	001-005-521.70-72	TRAINING AND REGISTRATION - JONES,EZELL	164632	450.00
01-000274 O'REILLY AUTO PARTS					
	C-0345-230898	001-005-521.50-63	VEHICLE MAINT O'REILLY AUTO PARTS	164774	10.00-
	C-0345-234669	001-005-521.50-63	VEHICLE MAINT O'REILLY AUTO PARTS	164774	62.67-
	I-0345-228244	001-005-521.50-63	VEHICLE MAINT BLANKET PO FOR POLICE DEPT	164774	167.31
	I-0345-229581	001-005-521.50-63	VEHICLE MAINT BLANKET PO FOR POLICE DEPT	164774	236.39
	I-0345-232616	001-005-521.50-63	VEHICLE MAINT BLANKET PO FOR POLICE DEPT	164774	21.95
	I-0345-233893	001-005-521.50-63	VEHICLE MAINT BLANKET PO FOR POLICE DEPT	164774	150.88
	I-0345-234658	001-005-521.50-63	VEHICLE MAINT BLANKET PO FOR POLICE DEPT.	164774	198.56
	I-0345-234724	001-005-521.50-63	VEHICLE MAINT BLANKET PO FOR POLICE DEPT.	164774	186.18
01-000309 US CELLULAR					
	I-0150154083	001-005-521.30-31	PHONE & TELEC PD NARCOTICS 580-775-3782	164856	27.85
	I-0150154083	001-005-521.30-31	PHONE & TELEC PIO 580-775-3783	164856	57.87
	I-0150154083	001-005-521.30-31	PHONE & TELEC ANIMAL CONTROL 580-775-5235	164856	62.25
	I-0150154083	001-005-521.30-31	PHONE & TELEC MARK LASITER 580-775-4111	164856	77.93
01-000328 JIMMIE'S AUTO SUPPLY LL					
	I-170701	001-005-521.50-63	VEHICLE MAINT BLANKET PO	164746	139.92
	I-170928	001-005-521.50-63	VEHICLE MAINT BLANKET PO	164746	76.38
	I-171024	001-005-521.50-63	VEHICLE MAINT BLANKET PO	164746	6.99
	I-171025	001-005-521.50-63	VEHICLE MAINT BLANKET PO	164746	38.85
	I-171193	001-005-521.50-63	VEHICLE MAINT BLANKET PO	164746	74.99
	I-171767	001-005-521.50-63	VEHICLE MAINT BLANKET PO	164746	205.93
	I-172390	001-005-521.50-63	VEHICLE MAINT BLANKET PO FOR POLICE	164746	126.49
	I-172459	001-005-521.50-63	VEHICLE MAINT BLANKET PO FOR POLICE	164746	132.49
	I-173216	001-005-521.50-63	VEHICLE MAINT BLANKET PO FOR POLICE	164746	106.29
	I-173897	001-005-521.50-63	VEHICLE MAINT BLANKET PO FOR POLICE	164746	19.65
01-000381 OKLAHOMA NATURAL GAS					
	I-AUG 2016	001-005-521.30-33	UTILITIES POLICE 210476717 1434922 91	164792	21.92
01-000450 OKLAHOMA GAS AND ELECTR					
	I-08/2016-129166792	001-005-521.30-33	UTILITIES ELECTRIC SERVICE-POLICE	164776	0.00
	I-08/2016-129232856	001-005-521.30-33	UTILITIES 3104 CARL ALBERT DR	164776	2,306.88
	I-08/2016-35948044	001-005-521.30-33	UTILITIES POLICE-ELECTRIC	164776	593.13
01-000500 RAYMOND'S AUTO SUPPLY I					
	I-432945	001-005-521.50-63	VEHICLE MAINT PD - NAPA BLANKET,WIPER BLADES	164809	43.98
	I-433625	001-005-521.50-63	VEHICLE MAINT PD - NAPA BLANKET,WIPER BLADES	164809	35.98
01-000540 AT&T					
	I-08/2016-7608 1	001-005-521.30-31	PHONE & TELEC POLICE	164637	401.37
01-000613 SHIPMAN COMMUNICATIONS					
	I-59921	001-005-521.50-63	VEHICLE MAINT VEHICLE RADIO REPAIRS	164823	92.34
	I-59968	001-005-521.50-63	VEHICLE MAINT PD 38 GPS	164823	1,520.00

PACKET: 08171 AP CLAIMS 09/14/2016
VENDOR SET: 01
FUND : 001 GENERAL FUND
DEPARTMENT: 005 POLICE - LAW ENFORCEMENT BANK: 601
BUDGET TO USE: CB-CURRENT BUDGET

VENDOR	NAME	ITEM #	G/L ACCOUNT NAME	DESCRIPTION	CHECK#	AMOUNT
01-000790	SIRCHIE FINGER PRINT					
		I-0267840-IN	001-005-521.50-69	OTHER EQUIP P EVIDENCE SUPPLIES	164824	107.38
01-000898	INDIAN NATION WHOLESALE					
		I-6556549	001-005-521.50-62	JANITORAL SUP PAPER TOWELS, ETC	164744	203.55
01-001149	RICHARD EZELL					
		I-08.02.16 -08.05.16	001-005-521.70-72	TRAINING AND PER DIEM A-ONE CONFERENCE	164706	136.50
01-001652	VONNIE HOUSER					
		I-08.12.16- 08.16.16	001-005-521.70-72	TRAINING AND PER DIEM IACP/DRE CONF	164740	310.50
01-001951	BETTY ROBERTSON					
		I-89	001-005-521.30-48	JANITORIAL SE POLICE DP JANITORIAL SERVICES	164643	1,653.33
		I-89	001-005-521.30-48	JANITORIAL SE DETECTIVE JANITORIAL SERVICES	164643	516.67
01-002242	JP MORGAN CHASE - BANK					
		I-0333-0018-0816	001-005-521.50-69	OTHER EQUIP P BATTERIES,MISC PARTS	000000	84.32
		I-0333-0018-0816	001-005-521.50-51	OFFICE SUPPLI PAPER, PENS, ETC	000000	19.76
		I-0333-0018-0816	001-005-521.50-58	BUILDING MAIN PD MINOR PARTS, HOSES, MISC	000000	36.80
		I-0333-0018-0816	001-005-521.50-62	JANITORAL SUP MISC JANITORIAL SUPPLIES	000000	159.50
01-002603	BILLY JONES					
		I-08.02.16- 08.05.16	001-005-521.70-72	TRAINING AND PER DIEM - A-ONE CONF	164755	136.50
01-002736	BRYAN COUNTY SHERIFF'S					
		I-AUGUST 2016	001-005-521.70-81	BRYAN CO. JAI HOUSING OF CITY PRISONERS	164651	8,110.00
01-002988	DAVID HOUSER					
		I-08.12.16- 08.16.16	001-005-521.70-72	TRAINING AND REIMBURSE MILEAGE,PARKING FEES	164739	193.90
		I-08.12.16- 08.16.16	001-005-521.70-72	TRAINING AND PER DIEM IACP/DRE CONF	164739	310.50
01-003045	SOUTHEASTERN ALARM CO					
		I-1860-6864	001-005-521.50-58	BUILDING MAIN REPAIR SECURITY DOORS	164828	200.00
01-003100	FUELMAN OF SOUTHERN OKL					
		I-08/2016-BG159577	001-005-521.50-52	FUEL POLICE DEPT-FUEL	000000	157.04
		I-08/2016-BG159577	001-005-521.50-63	VEHICLE MAINT POLICE-VEHICLE MAINTENANCE	000000	0.00
01-003290	MPH INDUSTRIES INC					
		I-671256	001-005-521.50-69	OTHER EQUIP P RADAR, REMOTE REPAIR	164768	147.25
01-003602	DURANT KIWANIS CLUB					
		I-1188	001-005-521.50-57	MEMBERSHIPS ANNUAL MEMBERSHIP WOODRUFF	164694	120.00
01-003703	QUILL CORPORATION					
		I-7862255	001-005-521.50-51	OFFICE SUPPLI PAPER,PENS, ETC.	164808	0.25
		I-7865091	001-005-521.50-51	OFFICE SUPPLI PAPER,PENS, ETC.	164808	150.92

PACKET: 08171 AP CLAIMS 09/14/2016
VENDOR SET: 01
FUND : 001 GENERAL FUND
DEPARTMENT: 005 POLICE - LAW ENFORCEMENT BANK: 601
BUDGET TO USE: CB-CURRENT BUDGET

VENDOR NAME	ITEM #	G/L ACCOUNT NAME	DESCRIPTION	CHECK#	AMOUNT
01-003739 CDW GOVERNMENT, INC.					
	I-DXM6619	001-005-521.50-80	FORENSIC EQUI 4 DVD-RW 25 PK's	164658	62.36
01-003817 TEXOMA MAINTENANCE &					
	I-18961	001-005-521.50-58	BUILDING MAIN 3104 CARL ALBERT MAINT CONTRAC	164840	139.17
01-003977 JOE ATCUSON STRIPING					
	I-677509	001-005-521.50-58	BUILDING MAIN RESTRIPE P/L AND HANDICAP ZONE	164752	520.00
01-003983 CLAYTON YARBROUGH					
	I-07.22.16	001-005-521.30-95	OHS TRAFFIC E REIMBURSE OHSO TRF ENF PATROLS	164875	25.13
	I-07.25.16	001-005-521.30-95	OHS TRAFFIC E REIMBURSE OHSO TRF ENF PATROLS	164875	5.00
	I-08.01.16	001-005-521.30-95	OHS TRAFFIC E REIMBURSE OHSO TRF ENF PATROLS	164875	50.25
	I-08.03.16	001-005-521.30-95	OHS TRAFFIC E REIMBURSE OHSO TRF ENF PATROLS	164875	25.13
	I-08.10.16	001-005-521.30-95	OHS TRAFFIC E REIMBURSE OHSO TRF ENF PATROLS	164875	25.13
	I-08.11.16	001-005-521.30-95	OHS TRAFFIC E REIMBURSE OHSO TRF ENF PATROLS	164875	50.25
	I-08.18.16	001-005-521.30-95	OHS TRAFFIC E REIMBURSE OHSO TRF ENF PATROLS	164875	100.50
01-003993 JOHN MCCLURE					
	I-08.22.16	001-005-521.10-12	OVERTIME 08/22/16 SRO DURANT HIGH SCHOO	164764	150.78
	I-08.29.16	001-005-521.10-12	OVERTIME 08/29/16 SRO DURANT HIGH SCHOO	164764	213.61
01-004143 TOUCHTONE COMMUNICATION					
	I-08/2016-809247222	001-005-521.30-31	PHONE & TELEC LONG DISTANCE CHGS POLICE	164851	11.94
01-004606 CARS AND TIRES, INC					
	I-12380	001-005-521.50-63	VEHICLE MAINT ALIGNMENT -------#121	164654	70.00
01-004980 DOUGLASS DISTRIBUTING					
	I-08/2016-DURCIT	001-005-521.50-52	FUEL POLICE	164689	968.17
	I-08/2016A-DURCIT	001-005-521.50-52	FUEL POLICE	164689	1,151.67
	I-08/2016B-DURCIT	001-005-521.50-52	FUEL POLICE	164689	1,174.47
	I-08/2016C-DURCIT	001-005-521.50-52	FUEL POLICE	164689	925.70
	I-08/2016D-DURCIT	001-005-521.50-52	FUEL POLICE	164689	1,263.73
01-005168 CASTEEL'S TIRE (CALERA)					
	I-1-GS52183	001-005-521.50-63	VEHICLE MAINT NEW TIRES #121-2	164656	227.54
	I-1-GS52206	001-005-521.50-63	VEHICLE MAINT 4-TIRES #422	164656	479.44
	I-1-GS52302	001-005-521.50-63	VEHICLE MAINT 4-TIRES #855	164656	479.44
01-005546 STUTEVILLE CHEVROLET OF					
	I-16101 CVR	001-005-521.50-63	VEHICLE MAINT BOLT #346	164834	5.70
	I-CVCS24307	001-005-521.50-63	VEHICLE MAINT STEERING SENSOR #097	164834	425.47
01-005576 TRANSUNION RISK & ALTER					
	I-JULY 2016	001-005-521.50-80	FORENSIC EQUI MONTHLY RESEARCH FEES	164852	25.00
01-005654 HOYTE CHRYSLER JEEP DOD					
	I-1007296	001-005-521.50-63	VEHICLE MAINT BLANKET PO FOR POLICE DEPT	164741	35.60

PACKET: 08171 AP CLAIMS 09/14/2016
VENDOR SET: 01
FUND : 001 GENERAL FUND
DEPARTMENT: 005 POLICE - LAW ENFORCEMENT BANK: 601
BUDGET TO USE: CB-CURRENT BUDGET

VENDOR	NAME	ITEM #	G/L ACCOUNT NAME	DESCRIPTION	CHECK#	AMOUNT
01-005654	HOYTE CHRYSLER JEEP DOD continued					
		I-1007310	001-005-521.50-63	VEHICLE MAINT BLANKET PO FOR POLICE DEPT	164741	173.60
		I-CHCS25027	001-005-521.50-63	VEHICLE MAINT ABS MODULE & HYD UNIT #975	164741	1,210.50
		I-CHCS25114	001-005-521.50-63	VEHICLE MAINT BLANKET PO FOR POLICE DEPT	164741	102.54
		I-CHCS25380	001-005-521.50-63	VEHICLE MAINT BLANKET PO FOR POLICE DEPT	164741	679.00
		I-CHCS25699	001-005-521.50-63	VEHICLE MAINT PD #121 BRAKE MODULE	164741	880.55

DEPARTMENT 005 POLICE - LAW ENFORCEMENT TOTAL: 31,920.12

PACKET: 08171 AP CLAIMS 09/14/2016
VENDOR SET: 01
FUND : 001 GENERAL FUND
DEPARTMENT: 006 POLICE - ANIMAL CONTROL BANK: 601
BUDGET TO USE: CB-CURRENT BUDGET

VENDOR NAME	ITEM #	G/L ACCOUNT NAME	DESCRIPTION	CHECK#	AMOUNT
01-000579 CASTEEL'S TIRE BARN INC					
	I-1-GS155578	001-006-523.50-63	VEHICLE MAINT 4 TIRES FOR ANIMAL CONTROL TRK	164657	432.48
01-001105 BRYAN COUNTY ANIMAL					
	I-08.12.16	001-006-523.30-15	VETERINARY SE EUTHANASIAS, ETC	164650	40.00
01-002242 JP MORGAN CHASE - BANK					
	I-0333-0018-0816	001-006-523.50-69	OTHER EQUIP P A.C. MISC PARTS,EQ, SUPPLIES	000000	23.76
01-003100 FUELMAN OF SOUTHERN OKL					
	I-08/2016-BG159577	001-006-523.50-52	FUEL ANIMAL CONTROL FULE	000000	0.00
	I-08/2016-BG159577	001-006-523.50-63	VEHICLE MAINT VEHICLE MAINT-ANIMAL CONTROL	000000	0.00
01-004980 DOUGLASS DISTRIBUTING					
	I-08/2016-DURCIT	001-006-523.50-52	FUEL ANIMAL CONTROL	164689	49.73
	I-08/2016A-DURCIT	001-006-523.50-52	FUEL ANIMAL CONTROL	164689	59.15
	I-08/2016B-DURCIT	001-006-523.50-52	FUEL ANIMAL CONTROL	164689	60.32
	I-08/2016C-DURCIT	001-006-523.50-52	FUEL ANIMAL CONTROL	164689	47.55
	I-08/2016D-DURCIT	001-006-523.50-52	FUEL ANIMAL CONTROL	164689	64.91

DEPARTMENT 006 POLICE - ANIMAL CONTROL TOTAL: 777.90

PACKET: 08171 AP CLAIMS 09/14/2016
VENDOR SET: 01
FUND : 001 GENERAL FUND
DEPARTMENT: 008 FIRE DEPARTMENT BANK: 601
BUDGET TO USE: CB-CURRENT BUDGET

VENDOR NAME	ITEM #	G/L ACCOUNT NAME	DESCRIPTION	CHECK#	AMOUNT
01-000328 JIMMIE'S AUTO SUPPLY LL					
	I-170840	001-008-522.50-61	MINOR TOOLS A FD BLANKET JIMMIE'S	164746	5.62
	I-172144	001-008-522.50-61	MINOR TOOLS A FD BLANKET JIMMIE'S	164746	11.39
01-000381 OKLAHOMA NATURAL GAS					
	I-AUG 2016	001-008-522.30-33	UTILITIES FIRE122 212845862 2523315 45	164792	27.72
	I-AUG 2016	001-008-522.30-33	UTILITIES FIRE124 212845862 2523315 45	164792	114.81
	I-AUG 2016	001-008-522.30-33	UTILITIES FIRE#3 212762353 2514273 00	164792	107.74
01-000450 OKLAHOMA GAS AND ELECTR					
	I-08/2016-129166792	001-008-522.30-33	UTILITIES ELECTRIC SERVICE-FIRE	164776	0.00
	I-08/2016-35948044	001-008-522.30-33	UTILITIES FIRE DEPT-ELECTRIC	164776	1,974.87
01-000459 OKLAHOMA CORRECTIONAL I					
	I-73827	001-008-522.50-51	OFFICE SUPPLI FIRE MARSHALL OFFICE CHAIRS	164788	456.00
01-000525 THE SIGN DEPOT,LLC					
	I-16117	001-008-522.50-61	MINOR TOOLS A NAME PLATES	164845	73.55
01-000540 AT&T					
	I-08/2016-7608 1	001-008-522.30-31	PHONE & TELEC FIRE	164637	188.45
01-000613 SHIPMAN COMMUNICATIONS					
	I-59967	001-008-522.70-80	PAGERS & RADI BLANKET PO PAGERS/RADIOS	164823	184.68
01-000970 STEVEN WILSON					
	I-08.13.16	001-008-522.70-72	TRAINING AND MILEAGE	164874	236.52
01-001566 WILSON ROSS FLORIST					
	I-5007	001-008-522.30-32	FREIGHT & POS BLANKET PO-----FED EX	164873	19.28
01-001729 SUTPHEN CORPORATION					
	I-40015416	001-008-522.50-61	MINOR TOOLS A TURN SIGNAL SWITCH #R1	164835	89.14
01-001951 BETTY ROBERTSON					
	I-89	001-008-522.30-48	JANITORIAL SE FIRE DEPT JANITORIAL SERVICES	164643	104.96
01-002010 DAVIS FLEET PARTS					
	I-621910	001-008-522.50-63	VEHICLE MAINT WATER PUMP, BELT, THERMO #R1	164684	324.53
	I-621962	001-008-522.50-63	VEHICLE MAINT OIL PRESSURE SENDING UNIT #R1	164684	51.90
01-002242 JP MORGAN CHASE - BANK					
	I-0215-1050-0816	001-008-522.50-61	MINOR TOOLS A GATORADE	000000	24.95
	I-2290-3789-0816	001-008-522.50-61	MINOR TOOLS A ADE ELECTRODES	000000	65.08
	I-2290-3789-0816	001-008-522.50-61	MINOR TOOLS A BATTERIES, MALLET, SCREWS, ANC	000000	31.93
	I-2290-3789-0816	001-008-522.50-61	MINOR TOOLS A BUCKETS, LIGHT BULBS, PROPANE	000000	74.74
	I-2290-3789-0816	001-008-522.50-62	JANITORAL SUP STATION SUPPLIES	000000	192.53
	I-2290-3789-0816	001-008-522.50-61	MINOR TOOLS A TOOL BOXES	000000	20.91
	I-2290-3789-0816	001-008-522.30-31	PHONE & TELEC IPAD CAR CHARGER	000000	44.98

PACKET: 08171 AP CLAIMS 09/14/2016
VENDOR SET: 01
FUND : 001 GENERAL FUND
DEPARTMENT: 008 FIRE DEPARTMENT BANK: 601
BUDGET TO USE: CB-CURRENT BUDGET

VENDOR NAME	ITEM #	G/L ACCOUNT NAME	DESCRIPTION	CHECK#	AMOUNT
01-002242 JP MORGAN CHASE - BANK continued					
	I-2290-3789-0816	001-008-522.50-61	MINOR TOOLS A BATTERIES	000000	44.38
	I-2290-3789-0816	001-008-522.50-62	JANITORAL SUP MONTHLY SUPPLIES	000000	243.20
01-002771 STEVE KELSO					
	I-08.20.16- 08.21.16	001-008-522.70-72	TRAINING AND MILEAGE & PER DIEM	164756	238.86
01-003008 PAGE GARAGE DOORS & INS					
	I-9549	001-008-522.50-58	BUILDING AND ENGINE BAY DOOR STATION 1	164800	130.00
01-003100 FUELMAN OF SOUTHERN OKL					
	I-08/2016-BG159577	001-008-522.50-52	FUEL FIRE DEPT-FUEL	000000	114.49
01-003462 JAMES HICKS					
	I-08.20.16- 08.21.16	001-008-522.70-72	TRAINING AND PER DIEM	164736	58.50
01-003466 CASCO INDUSTRIES INC					
	I-172838	001-008-522.50-61	MINOR TOOLS A T-1 PRIMER	164655	133.00
01-004143 TOUCHTONE COMMUNICATION					
	I-08/2016-809247222	001-008-522.30-31	PHONE & TELEC LONG DISTANCE CHGS FIRE DEPT	164851	0.00
01-004203 MCCRAW'S OIL & PROPANE					
	I-587625	001-008-522.50-69	OTHER EQUIP P FUEL TRANSFER MOTOR	164765	399.99
01-004272 FASTENAL					
	I-OKDUR57687	001-008-522.50-61	MINOR TOOLS A LEATHER WORK GLOVES	164708	499.74
01-004732 FARMER BROTHERS COFFEE					
	I-64091052 SO	001-008-522.50-62	JANITORAL SUP BLANKET PO	164707	117.18
01-004822 LAYTON, RICHARD					
	I-08.20.16- 08.21.16	001-008-522.70-72	TRAINING AND PER DIEM	164759	58.50
01-004901 BRUCE'S APPLIANCE REPAI					
	I-08.08.16	001-008-522.50-58	BUILDING AND DRYER REPAIR--STATION #1	164647	98.12
01-004980 DOUGLASS DISTRIBUTING					
	I-08/2016-DURCIT	001-008-522.50-52	FUEL FIRE DEPT	164689	193.51
	I-08/2016A-DURCIT	001-008-522.50-52	FUEL FIRE DEPT	164689	230.19
	I-08/2016B-DURCIT	001-008-522.50-52	FUEL FIRE DEPT	164689	234.74
	I-08/2016C-DURCIT	001-008-522.50-52	FUEL FIRE DEPT	164689	185.02
	I-08/2016D-DURCIT	001-008-522.50-52	FUEL FIRE DEPT	164689	252.58
01-005058 AUTOMATIC GATE SYSTEMS					
	I-123	001-008-522.50-58	BUILDING AND GATE REPAIR AT CENTRAL STATION	164640	275.00
01-005168 CASTEEL'S TIRE (CALERA)					
	I-1-52281	001-008-522.50-63	VEHICLE MAINT VALVE STEMS	164656	12.00

PACKET: 08171 AP CLAIMS 09/14/2016
VENDOR SET: 01
FUND : 001 GENERAL FUND
DEPARTMENT: 008 FIRE DEPARTMENT BANK: 601
BUDGET TO USE: CB-CURRENT BUDGET

VENDOR NAME	ITEM #	G/L ACCOUNT NAME	DESCRIPTION	CHECK#	AMOUNT
01-005347 BROOKS, BRANDON					
	I-08.20.16-08.21.16	001-008-522.70-72	TRAINING AND PER DIEM	164646	58.50
01-005430 VERIZON WIRELESS					
	I-08/2016-542025457	001-008-522.30-31	PHONE & TELEC CELL PHONE 4 FIRE TRUCKS	164860	100.40
01-005521 NORTHERN SAFETY & INDUS					
	I-902044412	001-008-522.50-61	MINOR TOOLS A TIC BATTERIES	164772	176.66
01-005579 EXPLORATION OUTFITTERS					
	I-4746	001-008-522.50-63	VEHICLE MAINT LIGHTS #B-2	164705	33.19
01-005808 P & L FIRE PROTECTION,					
	I-632	001-008-522.50-58	BUILDING AND ANNUAL SPRINKLER TEST	164799	390.00
01-005810 TOMMY FULTS					
	I-08.20.16- 08.21.16	001-008-522.70-72	TRAINING AND PER DIEM	164722	58.50
01-005836 RB&T ENTERPRISES, INC.					
	I-005836	001-008-522.70-72	TRAINING AND SWIFT WATER TRAINING FOR (5)	164810	975.00
			DEPARTMENT 008 FIRE DEPARTMENT	TOTAL:	9,737.53

PACKET: 08171 AP CLAIMS 09/14/2016
VENDOR SET: 01
FUND : 001 GENERAL FUND
DEPARTMENT: 009 PARKS, REC. & GEN. SVCS. BANK: 601
BUDGET TO USE: CB-CURRENT BUDGET

VENDOR NAME	ITEM #	G/L ACCOUNT NAME	DESCRIPTION	CHECK#	AMOUNT
01-000164 DURANT TRUE VALUE LUMBE					
	I-590959	001-009-532.50-58	BUILDING AND BLANKET PO	164695	0.99
	I-591024	001-009-532.50-58	BUILDING AND BLANKET PO	164695	114.96
	I-591081	001-009-532.50-58	BUILDING AND BLANKET PO	164695	26.99
	I-591148	001-009-532.50-58	BUILDING AND BLANKET PO	164695	7.79
	I-591167	001-009-532.50-58	BUILDING AND BLANKET PO	164695	30.05
	I-591340	001-009-532.50-58	BUILDING AND BLANKET PO	164695	18.99
	I-591365	001-009-532.50-58	BUILDING AND BLANKET PO	164695	8.76
	I-591498	001-009-532.50-58	BUILDING AND BLANKET PO	164695	34.15
	I-591700	001-009-532.50-58	BUILDING AND BLANKET PO	164695	63.87
01-000309 US CELLULAR					
	I-0150154083	001-009-532.30-31	PHONE & TELEC DMSC #580-775-1412	164856	27.85
01-000328 JIMMIE'S AUTO SUPPLY LL					
	I-173277	001-009-532.50-68	TRACTOR & MOW ALTERNATOR & BELT #C3	164746	196.78
	I-174092	001-009-532.50-63	VEHICLE MAINT HEADLIGHT & LUGNUTS #228	164746	20.65
01-000381 OKLAHOMA NATURAL GAS					
	I-AUG 2016	001-009-532.30-33	UTILITIES PARKS 211474003 2123338 91	164792	115.96
01-000450 OKLAHOMA GAS AND ELECTR					
	I-08/2016- 35948058	001-009-532.30-33	UTILITIES PARKS	164776	182.99
	I-08/2016-129166792	001-009-532.30-33	UTILITIES ELECTRIC SERVICE-PARKS	164776	0.00
	I-08/2016-129217298	001-009-532.30-33	UTILITIES 902 S 5TH	164776	41.74
	I-08/2016-129626704	001-009-532.30-33	UTILITIES OG&E 313 NE 4 SPLASH PAD	164776	41.02
	I-08/2016-35948044	001-009-532.30-33	UTILITIES PARKS-ELECTRIC	164776	31.41
	I-08/2016-35948044	001-009-532.30-33	UTILITIES CEMETERY-ELECTRIC	164776	32.81
01-000525 THE SIGN DEPOT,LLC					
	I-16231	001-009-532.50-63	VEHICLE MAINT CITY DECALS FOR ALL DEPTS.	164845	206.01
01-000540 AT&T					
	I-08/2016-7608 1	001-009-532.30-31	PHONE & TELEC PARKS	164637	122.47
01-000624 CINTAS CORP					
	I-618750017	001-009-532.50-54	UNIFORMS BLANKET PO FOR UNIFORMS	164666	99.69
	I-618750701	001-009-532.50-54	UNIFORMS BLANKET PO FOR UNIFORMS	164666	99.69
	I-618751384	001-009-532.50-54	UNIFORMS BLANKET PO FOR UNIFORMS	164666	99.69
	I-618752065	001-009-532.50-54	UNIFORMS BLANKET PO FOR UNIFORMS	164666	99.69
01-001080 PETTIT MACHINERY INC					
	C-P11739	001-009-532.50-68	TRACTOR & MOW PETTIT MACHINERY INC	164802	47.71-
	I-P11287	001-009-532.50-68	TRACTOR & MOW BLANKET PO FOR GARAGE	164802	217.80
	I-P11658	001-009-532.50-68	TRACTOR & MOW FUEL TANK #K20	164802	625.15
01-001263 LYNCH LAWN & LANDSCAPE					
	I-6199	001-009-532.30-65	MOWING CONTRA 2016 LAWN & GROUNDS MAINT.	164762	849.96

PACKET: 08171 AP CLAIMS 09/14/2016
VENDOR SET: 01
FUND : 001 GENERAL FUND
DEPARTMENT: 009 PARKS, REC. & GEN. SVCS. BANK: 601
BUDGET TO USE: CB-CURRENT BUDGET

VENDOR NAME	ITEM #	G/L ACCOUNT NAME	DESCRIPTION	CHECK#	AMOUNT
01-002242 JP MORGAN CHASE - BANK					
	I-0253-9452-0816	001-009-532.50-61	MINOR TOOLS A AIRLESS SPRAYER	000000	424.50
	I-0253-9452-0816	001-009-532.50-58	BUILDING AND COFFEE, CREAMER, SUGAR	000000	46.24
	I-0253-9452-0816	001-009-532.50-68	TRACTOR & MOW BLANKET PO	000000	995.30
	I-0253-9452-0816	001-009-532.50-69	OTHER EQUIP P BLANKET PO	000000	439.95
	I-0253-9452-0816	001-009-532.50-71	RECREATIONAL BLANKET PO	000000	1,731.60
01-002253 RELIANCE FASTENERS OF D					
	I-97572	001-009-532.50-58	BUILDING AND BLANKET PO--NUTS, BOLTS, WASHE	164814	18.10
01-002522 GLOVER MOWING & LANDSCA					
	I-5650	001-009-532.30-65	MOWING CONTRA PARKS MOWING CONTRACT	164725	2,868.60
	I-5662	001-009-532.30-65	MOWING CONTRA PARKS MOWING CONTRACT	164725	2,453.40
01-002831 BLACKBURN PLUMBING					
	I-P816.32	001-009-532.50-58	BUILDING AND ROCKET PARK PORTABLE SERVICE	164644	130.00
01-003100 FUELMAN OF SOUTHERN OKL					
	I-08/2016-BG159577	001-009-532.50-52	FUEL PARKS-FUEL	000000	0.00
01-004143 TOUCHTONE COMMUNICATION					
	I-08/2016-809247222	001-009-532.30-31	PHONE & TELEC LONG DISTANCE CHGS PARKS	164851	0.00
01-004980 DOUGLASS DISTRIBUTING					
	I-08/2016-DURCIT	001-009-532.50-52	FUEL PARKS	164689	322.92
	I-08/2016A-DURCIT	001-009-532.50-52	FUEL PARKS	164689	384.13
	I-08/2016B-DURCIT	001-009-532.50-52	FUEL PARKS	164689	391.73
	I-08/2016C-DURCIT	001-009-532.50-52	FUEL PARKS	164689	308.76
	I-08/2016D-DURCIT	001-009-532.50-52	FUEL PARKS	164689	421.50
01-005321 BLAKE GOODE & FANNIN BA					
	I-AIRPORT AUG 2016	001-009-532.30-65	MOWING CONTRA MOWING GROUP #1,2,3,5,6	164726	1,791.25
	I-BYPASS AUG 2016	001-009-532.30-65	MOWING CONTRA HIGHWAY BRUSH HOGGING	164726	11,400.00
	I-CITY HALL AUG 2016	001-009-532.30-65	MOWING CONTRA MOWING GROUP #1,2,3,5,6	164726	674.85
	I-CLOVER LEAF 1 AUG	001-009-532.30-65	MOWING CONTRA MOWING GROUP #1,2,3,5,6	164726	1,576.20
	I-CLOVER LEAF 2 AUG	001-009-532.30-65	MOWING CONTRA MOWING GROUP #1,2,3,5,6	164726	4,122.35
	I-HWY 69/75 AUG 2016	001-009-532.30-65	MOWING CONTRA HIGHWAY BRUSH HOGGING	164726	9,500.00
	I-LEONARD AUG 2016	001-009-532.30-65	MOWING CONTRA PARKS BRUSH HOGGING	164726	1,080.00
	I-LIBRARY AUG 2016	001-009-532.30-65	MOWING CONTRA MOWING GROUP #1,2,3,5,6	164726	2,252.55
	I-SLATON PARK AUG 16	001-009-532.30-65	MOWING CONTRA PARKS BRUSH HOGGING	164726	2,880.00

DEPARTMENT 009 PARKS, REC. & GEN. SVCS. TOTAL: 49,584.13

PACKET: 08171 AP CLAIMS 09/14/2016
VENDOR SET: 01
FUND : 001 GENERAL FUND
DEPARTMENT: 012 CITY SWIMMING POOL BANK: 601
BUDGET TO USE: CB-CURRENT BUDGET

VENDOR NAME	ITEM #	G/L ACCOUNT NAME	DESCRIPTION	CHECK#	AMOUNT
01-000164 DURANT TRUE VALUE LUMBE					
	I-591229	001-012-536.50-53	CHEMICALS, DR MURATIC ACID	164695	110.25
01-000450 OKLAHOMA GAS AND ELECTR					
	I-08/2016-129166792	001-012-536.30-33	UTILITIES ELECTRIC SERVICE-POOL	164776	0.00
	I-08/2016-35948044	001-012-536.30-33	UTILITIES POOL-ELECTRIC	164776	18.26
01-000540 AT&T					
	I-08/2016-7608 1	001-012-536.30-31	PHONE & TELEC SWIMMING POOL	164637	84.84
01-002242 JP MORGAN CHASE - BANK					
	I-2313-4855-0816	001-012-536.50-81	POOL CONCESSI BLANKET PO	000000	771.18
01-002347 WHOLESALE EQUIPMENT					
	I-048191	001-012-536.50-53	CHEMICALS, DR BLANKET PO---POOL CHEMICALS	164871	171.50
	I-048218	001-012-536.50-53	CHEMICALS, DR BLANKET PO---POOL CHEMICALS	164871	107.50
	I-048229	001-012-536.50-53	CHEMICALS, DR BLANKET PO---POOL CHEMICALS	164871	60.00
	I-048231	001-012-536.50-53	CHEMICALS, DR BLANKET PO---POOL CHEMICALS	164871	60.00
	I-048237	001-012-536.50-53	CHEMICALS, DR CARBON DIOXIDE	164871	110.00
01-004143 TOUCHTONE COMMUNICATION					
	I-08/2016-809247222	001-012-536.30-31	PHONE & TELEC LONG DISTANCE POOL	164851	0.00

DEPARTMENT 012 CITY SWIMMING POOL TOTAL: 1,493.53

PACKET: 08171 AP CLAIMS 09/14/2016
VENDOR SET: 01
FUND : 001 GENERAL FUND
DEPARTMENT: 013 MUNICIPAL COURT BANK: 601
BUDGET TO USE: CB-CURRENT BUDGET

VENDOR NAME	ITEM #	G/L ACCOUNT NAME	DESCRIPTION	CHECK#	AMOUNT
01-000484 PRICE'S PRINTING					
	I-52098	001-013-512.50-51	OFFICE SUPPLI CARDS FOR VICTORIA MATHEWS	164807	49.00
01-000596 TEXOMA PRINT SERVICES					
	I-60044	001-013-512.50-51	OFFICE SUPPLI CITATION ENVELOPES	164842	231.09
	I-60045	001-013-512.50-51	OFFICE SUPPLI ORDER OF RELEASE FORMS	164842	177.00
01-003248 FIVE STAR OFFICE SUPPLY					
	I-0213115-001	001-013-512.50-51	OFFICE SUPPLI BLANKET PO-----OFFICE SUPPLIES	164720	40.47
	I-0213737-001	001-013-512.50-51	OFFICE SUPPLI BLANKET PO-----OFFICE SUPPLIES	164720	86.25
01-004266 OKLAHOMA MUNICIPAL COUR					
	I-2271	001-013-512.50-57	MEMBERSHIPS VICTORIA MATHEWS MEMBER DUES	164791	55.00
	I-2272	001-013-512.70-72	TRAINING & TR OMCCA DIST 3 CERTIFICATION TRA	164791	50.00
01-005674 IN SYNCH SYSTEMS					
	I-3747	001-013-512.30-79	DIGITICKET SE DIGITICKET INTERFACE W/INSYNCH	164743	14,995.00

DEPARTMENT 013 MUNICIPAL COURT TOTAL: 15,683.81

PACKET: 08171 AP CLAIMS 09/14/2016
VENDOR SET: 01
FUND : 001 GENERAL FUND
DEPARTMENT: 014 COMMUNITY DEVELOPMENT BANK: 601
BUDGET TO USE: CB-CURRENT BUDGET

VENDOR NAME	ITEM #	G/L ACCOUNT NAME	DESCRIPTION	CHECK#	AMOUNT
01-000152 DURANT DAILY DEMOCRAT					
	I-301886445	001-014-525.30-39	LEGAL PUBLICA PC2016-04-MASSEY	164692	262.80
01-000484 PRICE'S PRINTING					
	I-52304	001-014-525.50-51	OFFICE SUPPLI NEW BUSINESS CARDS	164807	49.00
01-000540 AT&T					
	I-08/2016-7608 1	001-014-525.30-31	PHONE & TELEC COMMUNITY DEVELOPMENT	164637	0.00
01-001850 JACK R SKAGGS					
	I-AUG 2016	001-014-525.20-55	NUISANCE ABAT CODE ENFORCEMENT HEARING OFFIC	164825	500.00
01-002242 JP MORGAN CHASE - BANK					
	I-0338-3322-0816	001-014-525.30-31	PHONE & TELEC EFAX FOR COMDEV	000000	20.00
01-003100 FUELMAN OF SOUTHERN OKL					
	I-08/2016-BG159577	001-014-525.50-52	FUEL FUEL-COMMUNITY DEVELOPMENT	000000	0.00
01-004143 TOUCHTONE COMMUNICATION					
	I-08/2016-809247222	001-014-525.30-31	PHONE & TELEC LONG DISTANCE CHGS COM DEV	164851	7.08
01-004980 DOUGLASS DISTRIBUTING					
	I-08/2016-DURCIT	001-014-525.50-52	FUEL COM DEV	164689	20.69
	I-08/2016A-DURCIT	001-014-525.50-52	FUEL COM DEV	164689	24.62
	I-08/2016B-DURCIT	001-014-525.50-52	FUEL COM DEV	164689	25.10
	I-08/2016C-DURCIT	001-014-525.50-52	FUEL COM DEV	164689	19.79
	I-08/2016D-DURCIT	001-014-525.50-52	FUEL COM DEV	164689	27.01
01-005321 BLAKE GOODE & FANNIN BA					
	I- 412-424 E MAIN ST	001-014-525.20-55	NUISANCE ABAT 414-424 E. MAIN	164726	225.00
	I-1024 E EVERGREEN	001-014-525.20-55	NUISANCE ABAT 1024 W. EVERGREEN	164726	85.00
	I-119 E TEXAS	001-014-525.20-55	NUISANCE ABAT 119 E. TEXAS	164726	225.00
	I-407 E FLORIDA	001-014-525.20-55	NUISANCE ABAT 407 E. FLORIDA	164726	300.00
	I-601 S 11TH	001-014-525.20-55	NUISANCE ABAT 601 S 11TH	164726	100.00
	I-705 W ARKANSAS	001-014-525.20-55	NUISANCE ABAT 705 W ARKANSAS	164726	100.00
	I-714 S 3RD	001-014-525.20-55	NUISANCE ABAT 714 S. 3RD	164726	75.00

DEPARTMENT 014 COMMUNITY DEVELOPMENT TOTAL: 2,066.09

PACKET: 08171 AP CLAIMS 09/14/2016
VENDOR SET: 01
FUND : 001 GENERAL FUND
DEPARTMENT: 015 PUBLIC LIBRARY BANK: 601
BUDGET TO USE: CB-CURRENT BUDGET

VENDOR NAME	ITEM #	G/L ACCOUNT NAME	DESCRIPTION	CHECK#	AMOUNT
01-000071 MICROMARKETING LLC					
	I-631408	001-015-571.50-56	BOOKS AND PUB MISC. STANDING ORDERS	164767	75.98
	I-633987	001-015-571.50-56	BOOKS AND PUB MISC. STANDING ORDERS	164767	37.99
	I-634025	001-015-571.50-56	BOOKS AND PUB MISC. STANDING ORDERS	164767	37.99
	I-634497	001-015-571.50-56	BOOKS AND PUB MISC. STANDING ORDERS	164767	71.23
	I-635585	001-015-571.50-56	BOOKS AND PUB MISC. STANDING ORDERS	164767	71.24
01-000154 CENTER POINT LARGE PRIN					
	I-1398786	001-015-571.50-56	BOOKS AND PUB LP CHRISTIAN, MYSTERY	164660	1,581.84
	I-1398787	001-015-571.50-56	BOOKS AND PUB LP WESTERNS	164660	992.16
01-000164 DURANT TRUE VALUE LUMBE					
	I-591371	001-015-571.50-58	BUILDING AND LIBRARY SUPPLIES	164695	53.72
01-000450 OKLAHOMA GAS AND ELECTR					
	I-08/2016-129166792	001-015-571.30-33	UTILITIES ELECTRIC SERVICE-LIBRARY	164776	0.00
	I-08/2016-129612836	001-015-571.30-33	UTILITIES LIBRARY 1515 W MAIN #1	164776	64.68
	I-08/2016-35948044	001-015-571.30-33	UTILITIES LIBRARY-ELECTRIC	164776	0.00
01-000540 AT&T					
	I-08/2016-7608 1	001-015-571.30-31	PHONE & TELEC LIBRARY	164637	101.80
	I-08/2016-LIBRARY	001-015-571.30-31	PHONE & TELEC DWR LIBRARY	164637	248.18
01-001129 MCNAUGHTON BOOK SERVICE					
	I-M139838	001-015-571.50-56	BOOKS AND PUB MONTHLY BOOK LEASE	164766	169.00
	I-M140160	001-015-571.50-56	BOOKS AND PUB LEASE PURCHASE MATERIALS	164766	127.50
01-001275 RECORDED BOOKS, LLC					
	I-75379360	001-015-571.50-56	BOOKS AND PUB STANDING ORDER AUDIO TITLES	164811	12.87
	I-75388918	001-015-571.50-56	BOOKS AND PUB STANDING ORDER AUDIO TITLES	164811	38.87
01-001402 STEVE CRAWFORD					
	I-07.26.16	001-015-571.50-99	HUMANITIES PR PERFORMANCE	164679	370.00
01-001610 AMAZON.COM CREDIT PLAN					
	I-100623938465	001-015-571.50-51	OFFICE SUPPLI MISC. LIBRARY SUPPLIES	164635	70.14
	I-146917595048	001-015-571.50-51	OFFICE SUPPLI MISC. LIBRARY SUPPLIES	164635	47.78
	I-168077506869	001-015-571.50-56	BOOKS AND PUB MISC. LIBRARY SUPPLIES	164635	74.12
	I-168077935994	001-015-571.50-56	BOOKS AND PUB MISC. LIBRARY SUPPLIES	164635	152.71
	I-168078189731	001-015-571.50-56	BOOKS AND PUB MISC. LIBRARY SUPPLIES	164635	29.17
	I-168079186173	001-015-571.50-56	BOOKS AND PUB MISC. LIBRARY SUPPLIES	164635	14.96
	I-168079793417	001-015-571.50-56	BOOKS AND PUB MISC. LIBRARY SUPPLIES	164635	22.82
	I-168079860226	001-015-571.50-56	BOOKS AND PUB MISC. LIBRARY SUPPLIES	164635	12.99
	I-253970966561	001-015-571.50-51	OFFICE SUPPLI MISC. LIBRARY SUPPLIES	164635	17.48
	I-261880534601	001-015-571.50-51	OFFICE SUPPLI MISC. LIBRARY SUPPLIES	164635	54.49
01-001884 TEXOMA JANITORIAL SUPPL					
	I-2965	001-015-571.50-58	BUILDING AND MISC. CLEANING SUPPLIES	164839	29.95
	I-3000	001-015-571.50-58	BUILDING AND MISC. CLEANING SUPPLIES	164839	314.40

PACKET: 08171 AP CLAIMS 09/14/2016
VENDOR SET: 01
FUND : 001 GENERAL FUND
DEPARTMENT: 015 PUBLIC LIBRARY BANK: 601
BUDGET TO USE: CB-CURRENT BUDGET

VENDOR NAME	ITEM #	G/L ACCOUNT NAME	DESCRIPTION	CHECK#	AMOUNT
01-002242 JP MORGAN CHASE - BANK					
	I-0338-3322-0816	001-015-571.30-31	PHONE & TELEC EFAX FOR LIBRARY	000000	60.25
	I-2521-9340-0816	001-015-571.50-32	POSTAGE & FRE MONTHLY PRO PLAN	000000	15.99
	I-2521-9340-0816	001-015-571.50-99	HUMANITIES PR MOTION PIC LIC. CORP. UMBRELLA	000000	188.70
	I-2521-9340-0816	001-015-571.50-58	BUILDING AND MISC. LIBRARY PROJECTS	000000	365.43
	I-2521-9340-0816	001-015-571.70-35	STATE AID EXP GAMES FOR PATRON CHECK- OUT	000000	752.56
	I-2521-9340-0816	001-015-571.50-56	BOOKS AND PUB CURRENT MONTHLY MOVIE TITLES	000000	232.90
	I-2521-9340-0816	001-015-571.50-56	BOOKS AND PUB 1YR. SUB. RENEWAL EXP. 8/3/17	000000	324.00
	I-2521-9340-0816	001-015-571.50-51	OFFICE SUPPLI BUFFING MACHINE SUPPLIES	000000	164.99
	I-2521-9340-0816	001-015-571.50-99	HUMANITIES PR SR CHILDRENS PROGRAM SUPPLIES	000000	468.52
01-002631 INGRAM LIBRARY SERVICES					
	I-94070219	001-015-571.50-56	BOOKS AND PUB MISC. TITLES	164745	92.86
	I-94504984	001-015-571.50-56	BOOKS AND PUB MISC. TITLES	164745	17.54
	I-94527802	001-015-571.50-56	BOOKS AND PUB MISC. TITLES	164745	63.88
01-003248 FIVE STAR OFFICE SUPPLY					
	I-0213496-001	001-015-571.50-51	OFFICE SUPPLI MISC. LIBRARY SUPPLIES	164720	62.87
01-004143 TOUCHTONE COMMUNICATION					
	I-08/2016-809247222	001-015-571.30-31	PHONE & TELEC LONG DISTANCE CHGS LIBRARY	164851	4.60
01-004971 MULLEN, ANGIE					
	I-AUG 2016	001-015-571.70-72	TRAINING AND LIBRARY TRAVEL TO BANK & CH	164770	55.94
01-005244 THE LIBRARY CORPORATION					
	I-2017053110	001-015-571.30-55	MAINTENANCE C SOFTWARE SUPPORT RENEWAL	164844	6,485.00
01-005422 TONUBBEE, ROBBEE					
	I-08.14.16-08.19.16	001-015-571.70-72	TRAINING AND IFLA NATIONAL MTG COLUMBUS, OH	164849	404.97
01-005454 CENGAGE LEARNING, INC.					
	I-58387544	001-015-571.50-56	BOOKS AND PUB LARGE PRINT TITLES	164659	77.57
	I-58394457	001-015-571.50-56	BOOKS AND PUB LARGE PRINT TITLES	164659	32.38
	I-58422713	001-015-571.50-56	BOOKS AND PUB AMISH MILLIONAIRE SERIES	164659	23.99
	I-58464022	001-015-571.50-56	BOOKS AND PUB LARGE PRINT TITLES	164659	355.88
	I-58480621	001-015-571.50-56	BOOKS AND PUB AMISH MILLIONAIRE SERIES	164659	47.98
	I-58503107	001-015-571.50-56	BOOKS AND PUB LARGE PRINT TITLES	164659	83.24
	I-58541520	001-015-571.50-56	BOOKS AND PUB LARGE PRINT TITLES	164659	75.97
	I-58552952	001-015-571.50-56	BOOKS AND PUB LARGE PRINT TITLES	164659	27.19
	I-58554409	001-015-571.50-56	BOOKS AND PUB LARGE PRINT TITLES	164659	32.38
	I-58589722	001-015-571.50-56	BOOKS AND PUB STANDING ORDER LRG PRINT FIC.	164659	158.92
	I-58654885	001-015-571.50-56	BOOKS AND PUB LARGE PRINT TITLES	164659	21.00
01-005642 VYVE					
	I-AUG 2016	001-015-571.30-33	UTILITIES LIB. 301109243 1515 W MAIN ST	164867	104.85

DEPARTMENT 015 PUBLIC LIBRARY TOTAL: 15,698.41

PACKET: 08171 AP CLAIMS 09/14/2016
VENDOR SET: 01
FUND : 001 GENERAL FUND
DEPARTMENT: 016 STREET DEPARTMENT BANK: 601
BUDGET TO USE: CB-CURRENT BUDGET

VENDOR NAME	ITEM #	G/L ACCOUNT NAME	DESCRIPTION	CHECK#	AMOUNT
01-000164 DURANT TRUE VALUE LUMBE					
	I-590861	001-016-541.50-61	MINOR TOOLS A BLANKET PO	164695	36.49
	I-590978	001-016-541.50-61	MINOR TOOLS A BLANKET PO	164695	82.22
	I-591116	001-016-541.50-61	MINOR TOOLS A BLANKET PO	164695	6.90
	I-591119	001-016-541.50-61	MINOR TOOLS A BLANKET PO	164695	14.28
	I-591302	001-016-541.50-61	MINOR TOOLS A BLANKET PO	164695	45.98
	I-591425	001-016-541.50-61	MINOR TOOLS A BLANKET PO	164695	34.99
01-000260 GRAHAM INTERNATIONAL IN					
	I-672720	001-016-541.50-63	VEHICLE MAINT INJECTOR #83	164730	364.30
01-000275 OVERLAND CORP					
	I-9555	001-016-541.50-95	PAVING MAINTE ASPHALT FOR PATCHING	164796	256.95
	I-9556	001-016-541.50-95	PAVING MAINTE ASPHALT	164796	1,458.00
	I-9557	001-016-541.50-95	PAVING MAINTE ASPHALT FOR PATCHING	164796	245.82
	I-9558	001-016-541.50-95	PAVING MAINTE ASPHALT FOR PATCHING	164796	252.11
	I-9591	001-016-541.50-95	PAVING MAINTE ASPHALT FOR PATCHING	164796	253.08
	I-9592	001-016-541.50-95	PAVING MAINTE ASPHALT FOR PATCHING	164796	243.89
	I-9629	001-016-541.50-95	PAVING MAINTE ASPHALT FOR PATCHING	164796	547.77
	I-9685	001-016-541.50-95	PAVING MAINTE ASPHALT FOR PATCHING	164796	293.73
	I-9686	001-016-541.50-95	PAVING MAINTE ASPHALT FOR PATCHING	164796	542.93
	I-9687	001-016-541.50-95	PAVING MAINTE ASPHALT FOR PATCHING	164796	285.98
01-000309 US CELLULAR					
	I-0150154083	001-016-541.30-31	PHONE & TELEC STREET ON CALL #580-775-3415	164856	42.84
01-000328 JIMMIE'S AUTO SUPPLY LL					
	I-170912	001-016-541.50-63	VEHICLE MAINT BLANKET PO FOR STREET	164746	171.99
	I-171146	001-016-541.50-63	VEHICLE MAINT BLANKET PO FOR STREET	164746	76.96
	I-172376	001-016-541.50-63	VEHICLE MAINT BLANKET PO FOR STREET	164746	47.65
	I-172391	001-016-541.50-63	VEHICLE MAINT BLANKET PO FOR STREET	164746	16.55
	I-172845	001-016-541.50-63	VEHICLE MAINT BLANKET PO	164746	41.45
	I-173377	001-016-541.50-63	VEHICLE MAINT BLANKET PO FOR STREET	164746	35.96
	I-174169	001-016-541.50-63	VEHICLE MAINT BLANKET PO	164746	34.32
01-000455 CALIFORNIA CONTRACTORS					
	I-T 36131	001-016-541.50-67	SIGNS REFLECTIVE CAUTION TAPE	164652	298.80
01-000508 RUSTIN CONCRETE					
	I-57741	001-016-541.50-71	DRAINAGE MAIN CONCRETE	164819	109.00
	I-58020	001-016-541.50-95	PAVING MAINTE CONCRETE	164819	163.50
	I-58308	001-016-541.50-71	DRAINAGE MAIN 1-YARD OF CONCRETE	164819	109.00
	I-58776	001-016-541.50-95	PAVING MAINTE CONCRETE	164819	125.00
01-000525 THE SIGN DEPOT,LLC					
	I-16231	001-016-541.50-63	VEHICLE MAINT CITY DECALS FOR ALL DEPTS.	164845	206.01
01-000540 AT&T					
	I-08/2016-7608 1	001-016-541.30-31	PHONE & TELEC STREET DEPT	164637	11.40

PACKET: 08171 AP CLAIMS 09/14/2016
VENDOR SET: 01
FUND : 001 GENERAL FUND
DEPARTMENT: 016 STREET DEPARTMENT BANK: 601
BUDGET TO USE: CB-CURRENT BUDGET

VENDOR NAME	ITEM #	G/L ACCOUNT NAME	DESCRIPTION		CHECK#	AMOUNT
01-000624 CINTAS CORP						
	C-6186307CR	001-016-541.50-54	UNIFORMS	CINTAS CORP	164666	7.06-
	I-618750015	001-016-541.50-54	UNIFORMS	BLANKET PO FOR STREET UNIFORMS	164666	87.52
	I-618750699	001-016-541.50-54	UNIFORMS	BLANKET PO FOR STREET UNIFORMS	164666	87.52
	I-618751382	001-016-541.50-54	UNIFORMS	BLANKET PO FOR STREET UNIFORMS	164666	87.52
	I-618752063	001-016-541.50-54	UNIFORMS	BLANKET PO FOR STREET UNIFORMS	164666	87.52
01-001093 TEXOMA BUSINESS SERVICE						
	I-91330	001-016-541.30-51	CONTRACT LABO	(2) SEASONAL WORKERS 60 DAYS	164838	1,216.75
	I-91365	001-016-541.30-51	CONTRACT LABO	(2) SEASONAL WORKERS 60 DAYS	164838	1,139.25
	I-91399	001-016-541.30-51	CONTRACT LABO	(2) SEASONAL WORKERS 60 DAYS	164838	961.00
01-001420 UNITED ENGINES LLC						
	I-2081928	001-016-541.50-63	VEHICLE MAINT	TRANSMISSION CONTROLLER 383	164854	1,436.75
01-001906 VULCAN INC						
	I-294632	001-016-541.50-67	SIGNS	STREET SIGNS	164866	984.10
01-002010 DAVIS FLEET PARTS						
	I-621950	001-016-541.50-63	VEHICLE MAINT	BRAKES, WHEEL SEAL #83	164684	138.73
	I-622329	001-016-541.50-63	VEHICLE MAINT	A/C COMPRESSOR KIT, SHOCKS #42	164684	534.62
	I-622330	001-016-541.50-63	VEHICLE MAINT	A/C PARTS #83	164684	195.00
	I-622421	001-016-541.50-63	VEHICLE MAINT	A/C PARTS #83	164684	385.92
01-002242 JP MORGAN CHASE - BANK						
	I-2275-0461-0816	001-016-541.50-61	MINOR TOOLS A	BLANKET PO	000000	88.77
01-002451 PAVING MAINTENANCE SUPP						
	I-26001036	001-016-541.50-96	PAVEMENT MARK	CROSSWALK PAINT	164806	700.00
01-002617 RED BUD SUPPLY, INC.						
	I-144060	001-016-541.50-67	SIGNS	PEDESTRIAN SIGNS	164812	1,052.82
01-003100 FUELMAN OF SOUTHERN OKL						
	I-08/2016-BG159577	001-016-541.50-52	FUEL	STREET-FUEL	000000	0.00
01-003852 H.D. INDUSTRIES, INC.						
	I-24390	001-016-541.50-63	VEHICLE MAINT	AUGER FOR BED #PATCH TRUCK	164734	1,206.73
01-004143 TOUCHTONE COMMUNICATION						
	I-08/2016-809247222	001-016-541.30-31	PHONE & TELEC	LONG DISTANCE CHGS STREET	164851	0.00
01-004203 MCCRAW'S OIL & PROPANE						
	I-51907	001-016-541.50-95	PAVING MAINTE	PROPANE FOR PATCH TRUCK	164765	12.45
01-004272 FASTENAL						
	I-OKDUR57796	001-016-541.50-69	OTHER EQUIP P	LASER LEVEL	164708	686.06
	I-OKDUR57833	001-016-541.50-69	OTHER EQUIP P	SAWS ALL BLADES	164708	263.48
	I-OKDUR58096	001-016-541.50-67	SIGNS	50-TRAFFIC CHANNELIZES	164708	1,633.00

PACKET: 08171 AP CLAIMS 09/14/2016
VENDOR SET: 01
FUND : 001 GENERAL FUND
DEPARTMENT: 016 STREET DEPARTMENT BANK: 601
BUDGET TO USE: CB-CURRENT BUDGET

VENDOR	NAME	ITEM #	G/L ACCOUNT NAME	DESCRIPTION	CHECK#	AMOUNT
01-004272	FASTENAL	continued				
		I-OKDUR58098	001-016-541.50-67	SIGNS TRAFFIC CONES	164708	368.48
01-004980	DOUGLASS DISTRIBUTING					
		I-08/2016-DURCIT	001-016-541.50-52	FUEL STREET	164689	632.53
		I-08/2016A-DURCIT	001-016-541.50-52	FUEL STREET	164689	752.42
		I-08/2016B-DURCIT	001-016-541.50-52	FUEL STREET	164689	767.31
		I-08/2016C-DURCIT	001-016-541.50-52	FUEL STREET	164689	604.78
		I-08/2016D-DURCIT	001-016-541.50-52	FUEL STREET	164689	825.64
01-005437	YELLOWHOUSE MACHINERY C					
		I-173786	001-016-541.50-69	OTHER EQUIP P K14	164876	224.17
01-005654	HOYTE CHRYSLER JEEP DOD					
		I-1007393	001-016-541.50-63	VEHICLE MAINT WINDOW SWITCH #313	164741	28.56
01-005706	SOUTHEASTERN ICE					
		I-05-600454	001-016-541.50-58	BUILDING AND ICE	164831	70.00
01-005724	TEXHOMA LIMESTONE, INC					
		I-5646	001-016-541.50-95	PAVING MAINTE BASEROCK FOR PATCHING	164836	7,996.46

DEPARTMENT 016 STREET DEPARTMENT TOTAL: 31,704.65

PACKET: 08171 AP CLAIMS 09/14/2016
VENDOR SET: 01
FUND : 001 GENERAL FUND
DEPARTMENT: 018 CIVIL EMERGENCY MGMT. BANK: 601
BUDGET TO USE: CB-CURRENT BUDGET

VENDOR NAME	ITEM #	G/L ACCOUNT NAME	DESCRIPTION	CHECK#	AMOUNT
01-000253 GENE'S TIRE SERVICE INC					
	I-161417	001-018-519.50-63	VEHICLE MAINT 4-TIRES	164724	450.00
01-000274 O'REILLY AUTO PARTS					
	I-0345-231614	001-018-519.50-63	VEHICLE MAINT BLANKET PO	164774	99.97
	I-0345-231776	001-018-519.50-63	VEHICLE MAINT BLANKET PO	164774	10.47
	I-0345-233288	001-018-519.50-63	VEHICLE MAINT BLANKET PO	164774	8.74
01-000309 US CELLULAR					
	I-0150046634	001-018-519.30-31	PHONE & TELEC E2462 4398 4613 8758 8759 8760	164856	556.83
	I-0150154083	001-018-519.30-31	PHONE & TELEC EM JAMES DALTON 580-775-3661	164856	85.52
	I-0150154083	001-018-519.30-31	PHONE & TELEC EM UNPUBLISHED #580-775-5888	164856	65.72
01-000381 OKLAHOMA NATURAL GAS					
	I-AUG 2016	001-018-519.30-33	UTILITIES DEOC BLDG 211473996 2579350 36	164792	37.02
01-000500 RAYMOND'S AUTO SUPPLY I					
	I-432503	001-018-519.50-70	NEW SIREN MAI BLANKET PO	164809	229.00
	I-433872	001-018-519.50-70	NEW SIREN MAI BLANKET PO	164809	25.49
	I-434075	001-018-519.50-70	NEW SIREN MAI BLANKET PO	164809	224.00
	I-434767	001-018-519.50-70	NEW SIREN MAI BLANKET PO	164809	25.49
	I-434768	001-018-519.50-70	NEW SIREN MAI BLANKET PO	164809	229.00
01-000540 AT&T					
	I-08/2016-7608 1	001-018-519.30-31	PHONE & TELEC EMERGENCY MANAGEMENT	164637	70.38
01-002242 JP MORGAN CHASE - BANK					
	I-2275-4257-0816	001-018-519.50-69	EQUIP MAINT & BLANKET PO	000000	423.92
	I-2275-4257-0816	001-018-519.50-51	OFFICE SUPPLI BLANKET PO	000000	480.00
	I-2275-4257-0816	001-018-519.50-57	MEMBERSHIPS OK EM MGMT ASSOC MEMBERSHIP	000000	205.00
	I-2275-4257-0816	001-018-519.50-49	COMPUTER SOFT BLANKET PO	000000	370.00
	I-2275-4257-0816	001-018-519.50-54	UNIFORMS UNIFORM PANTS	000000	258.93
01-003100 FUELMAN OF SOUTHERN OKL					
	I-08/2016-BG159577	001-018-519.50-52	FUEL EMERGENCY MANAGEMENT	000000	0.00
01-004143 TOUCHTONE COMMUNICATION					
	I-08/2016-809247222	001-018-519.30-31	PHONE & TELEC LONG DISTANCE CHGS EMGT	164851	0.00
01-004297 KENNETH EPPLER					
	I-06.29.16- 06.30.16	001-018-519.70-72	TRAINING AND PER DIEM FOR KENNETH EPPLER	164701	29.25
01-004980 DOUGLASS DISTRIBUTING					
	I-08/2016-DURCIT	001-018-519.50-52	FUEL EM MGMT	164689	46.37
	I-08/2016A-DURCIT	001-018-519.50-52	FUEL EM MGMT	164689	55.16
	I-08/2016B-DURCIT	001-018-519.50-52	FUEL EM MGMT	164689	56.25
	I-08/2016C-DURCIT	001-018-519.50-52	FUEL EM MGMT	164689	44.34
	I-08/2016D-DURCIT	001-018-519.50-52	FUEL EM MGMT	164689	60.52

PACKET: 08171 AP CLAIMS 09/14/2016
VENDOR SET: 01
FUND : 001 GENERAL FUND
DEPARTMENT: 018 CIVIL EMERGENCY MGMT. BANK: 601
BUDGET TO USE: CB-CURRENT BUDGET

VENDOR	NAME	ITEM #	G/L ACCOUNT NAME	DESCRIPTION	CHECK#	AMOUNT
01-005430	VERIZON WIRELESS					
		I-08/2016-02 015817	001-018-519.30-31	PHONE & TELEC DATA PLAN EM NEW TRAILER	164860	31.21
				DEPARTMENT 018 CIVIL EMERGENCY MGMT. TOTAL:		4,178.58

PACKET: 08171 AP CLAIMS 09/14/2016
VENDOR SET: 01
FUND : 001 GENERAL FUND
DEPARTMENT: 019 GENERAL GOVERNMENT BANK: 601
BUDGET TO USE: CB-CURRENT BUDGET

VENDOR NAME	ITEM #	G/L ACCOUNT NAME	DESCRIPTION	CHECK#	AMOUNT
01-000152 DURANT DAILY DEMOCRAT					
	I-301883687	001-019-569.30-38	ADVERTISING- BLANKET PO-- ADVERTISE JOB ADS	164692	328.50
01-000262 JERRY TOMLINSON					
	I-AUG 2016	001-019-569.70-22	COUNCIL MEMBE CITY COUNCIL COMPENSATION	164848	150.00
01-000381 OKLAHOMA NATURAL GAS					
	I-AUG 2016	001-019-569.30-33	UTILITIES CITY HALL 210476745 1434958 91	164792	149.26
	I-AUG 2016	001-019-569.30-33	UTILITIES DPS BLDG 211474141 2123450 27	164792	45.57
01-000450 OKLAHOMA GAS AND ELECTR					
	I-08/2016-129166792	001-019-569.30-33	UTILITIES ELECTRIC SERVICE-GENERAL GOVNT	164776	42.60
	I-08/2016-129501066	001-019-569.30-33	UTILITIES 4201 N SERVICE ROAD	164776	35.66
	I-08/2016-129652900	001-019-569.30-33	UTILITIES 206 N 3 #STREETSCAP	164776	30.28
	I-08/2016-129780045	001-019-569.30-33	UTILITIES 2797 S 9TH SIGNAL	164776	43.80
	I-08/2016-129780066	001-019-569.30-33	UTILITIES 2615 S 9 SIGNAL	164776	44.84
	I-08/2016-129780346	001-019-569.30-33	UTILITIES 2801 SE 3 AV SIGNAL	164776	38.75
	I-08/2016-129780364	001-019-569.30-33	UTILITIES 5276 W MAIN SIGNAL	164776	38.75
	I-08/2016-129826738	001-019-569.30-33	UTILITIES 1.5 MS HWY 78 W.2	164776	62.32
	I-08/2016-130283888	001-019-569.30-33	UTILITIES 1608 N 9TH GG	164776	242.94
	I-08/2016-130327858	001-019-569.30-33	UTILITIES LIGHTS 16715 US HIGHWAY 70	164776	134.03
	I-08/2016-130534609	001-019-569.30-33	UTILITIES 1500 SE 3	164776	25.71
	I-08/2016-35948044	001-019-569.30-33	UTILITIES GEN GOVT-ELECTRIC	164776	18,286.29
	I-08/2016-35948044	001-019-569.30-33	UTILITIES GENERAL GOV.	164776	69.13
	I-08/2016-35948044	001-019-569.30-33	UTILITIES SIRENS/16 ACCTS	164776	412.96
01-000540 AT&T					
	I-08/2016-229-2594	001-019-569.30-31	PHONE SERVICE ONENET SERVICE LONG DISTANCE	164637	2.92
	I-08/2016-229-2602	001-019-569.30-31	PHONE SERVICE ONENET SERVICE LONG DISTANCE	164637	127.09
	I-08/2016-7608 1	001-019-569.30-31	PHONE SERVICE COMMON COSTS	164637	1,524.14
01-000584 THREE VALLEY MUSEUM					
	I-1ST QUARTER	001-019-569.70-66	DURANT HISTOR OPERATION OF A MUSEUM	164846	2,125.00
01-000944 CRAWFORD & ASSOCIATES P					
	I-10030	001-019-569.20-21	PRORATED AUDI AUDIT PREPARATION	164678	133.08
	I-9979	001-019-569.20-21	PRORATED AUDI AUDIT PREPARATION	164678	264.56
01-000948 CENTRAL ELECTRIC					
	I-10563	001-019-569.50-58	BUILDING MAIN A/C REPAIR IN CONFERENCE ROOM	164661	67.50
01-001671 SOUTHEASTERN ELECTRIC					
	I-AUG 2016	001-019-569.30-33	UTILITIES GG SEC LIGHT ONLY 16370-001	164829	63.74
	I-AUG 2016	001-019-569.30-33	UTILITIES GG SEC LIGHT ONLY 16370-002	164829	10.62
	I-AUG 2016	001-019-569.30-33	UTILITIES GG CAMELOT ENTRANCE 16370-021	164829	10.62
	I-AUG 2016	001-019-569.30-33	UTILITIES GG REMINGTON STR LT 16370-015	164829	84.99
	I-AUG 2016	001-019-569.30-33	UTILITIES GG LIGHTS CAMELOT 16370-019	164829	21.25
	I-AUG 2016	001-019-569.30-33	UTILITIES GG SIREN RIDGEMONT 16370-009	164829	30.00
	I-AUG 2016	001-019-569.30-33	UTILITIES GG LIGHTS CAMELOT 16370-020	164829	21.25

PACKET: 08171 AP CLAIMS 09/14/2016
VENDOR SET: 01
FUND : 001 GENERAL FUND
DEPARTMENT: 019 GENERAL GOVERNMENT BANK: 601
BUDGET TO USE: CB-CURRENT BUDGET

VENDOR NAME	ITEM #	G/L ACCOUNT NAME	DESCRIPTION	CHECK#	AMOUNT
01-001752 OKLAHOMA STATE BUREAU O					
	I-AUG 2016 AFIS	001-019-569.70-61	C.L.E.E.T. LA AFIS FEES----JULY 2016	164787	492.00
	I-AUGUST 2016	001-019-569.70-61	C.L.E.E.T. LA FORENSIC FEES---JULY 2016	164787	478.80
01-001884 TEXOMA JANITORIAL SUPPL					
	I-2994	001-019-569.50-62	JANITORIAL SU BLANKET PO	164839	23.95
01-001951 BETTY ROBERTSON					
	I-89	001-019-569.30-48	JANITORIAL SE CITY HALL JANITORIAL SERVICES	164643	1,540.49
01-002242 JP MORGAN CHASE - BANK					
	I-0338-3322-0816	001-019-569.50-63	VEHICLE MAINT FORD TAURUS DETAILED	000000	120.00
01-002989 C.L.E.E.T.					
	I-AUGUST 2016	001-019-569.70-61	C.L.E.E.T. LA CLEET FEES---JULY 2016	164671	798.84
01-003100 FUELMAN OF SOUTHERN OKL					
	I-08/2016-BG159577	001-019-569.70-77	A & G MISCELL FUEL STATEMENT CHARGES	000000	32.00-
	I-08/2016-BG159577	001-019-569.50-52	GENERAL GOV C FUEL-GEN GOVERMENT	000000	0.00
01-003144 OTIS ELEVATOR COMPANY					
	I-TD65036916	001-019-569.30-42	CITY HALL ELE BLANKET PO------ELEVATOR MAINT	164795	290.19
01-003189 BRYAN CO RWD #2					
	I-AUG 2016	001-019-569.30-33	UTILITIES BOY SCOUTS ACCT #3093	164648	8.25
	I-AUG 2016	001-019-569.30-33	UTILITIES REMINGTON HILLS ACCT#3801	164648	8.25
01-003248 FIVE STAR OFFICE SUPPLY					
	I-0213227-001	001-019-569.50-58	BUILDING MAIN DESK, CHAIR, SHREDDER, TABLE	164720	3,074.37
	I-1756334	001-019-569.50-70	PHOTOCOPY PAP COPY PAPER	164720	488.60
01-004463 OKLAHOMA DEPARTMENT OF					
	I-160720E32951	001-019-569.30-42	CITY HALL ELE CITY HALL ELEVATOR INSPECTION	164789	100.00
01-004735 OKLAHOMA UNIFORM BUILDI					
	I-08/2016-TITLE 748	001-019-569.70-60	UBCC FEES DUE TITLE 748 MONTHLY COLLECTION	164790	576.00
01-004980 DOUGLASS DISTRIBUTING					
	I-08/2016-DURCIT	001-019-569.50-52	GENERAL GOV C GEN GOV	164689	0.40
	I-08/2016A-DURCIT	001-019-569.50-52	GENERAL GOV C GEN GOV	164689	0.48
	I-08/2016B-DURCIT	001-019-569.50-52	GENERAL GOV C GEN GOV	164689	0.49
	I-08/2016C-DURCIT	001-019-569.50-52	GENERAL GOV C GEN GOV	164689	0.39
	I-08/2016D-DURCIT	001-019-569.50-52	GENERAL GOV C GEN GOV	164689	0.53
01-005351 MARLOW CONSTRUCTION					
	I-2723	001-019-569.50-58	BUILDING MAIN OFFICES REMODEL	164763	3,468.00
01-005455 HOFFMAN, STEWART					
	I-AUG 2016	001-019-569.70-22	COUNCIL MEMBE CITY COUNCIL COMPENSATION	164738	250.00

PACKET: 08171 AP CLAIMS 09/14/2016
VENDOR SET: 01
FUND : 001 GENERAL FUND
DEPARTMENT: 019 GENERAL GOVERNMENT BANK: 601
BUDGET TO USE: CB-CURRENT BUDGET

VENDOR	NAME	ITEM #	G/L ACCOUNT NAME	DESCRIPTION	CHECK#	AMOUNT
01-005613	BILLY ORR					
		I-AUG 2016	001-019-569.70-22	COUNCIL MEMBE CITY COUNCIL COMPENSATION	164793	150.00
01-005693	BRADLEY DALE COLLINS					
		I-4036	001-019-569.50-58	BUILDING MAIN BLANKET PO FOR BUILDING KEYS	164641	56.50
01-005700	DESTRY K HAWTHORNE					
		I-AUG 2016	001-019-569.70-22	COUNCIL MEMBE CITY COUNCIL COMPENSATION	164733	150.00
01-005701	CHAD HITCHCOCK					
		I-AUG 2016	001-019-569.70-22	COUNCIL MEMBE CITY COUNCIL COMPENSATION	164737	150.00
01-1	MISCELLANEOUS VENDOR					
	TIM RUNDEL	I-201608269939	001-019-569.70-77	A & G MISCELL TIM RUNDEL: TRAVEL REIMBURSE.	164847	959.13

DEPARTMENT 019 GENERAL GOVERNMENT TOTAL: 37,821.81

PACKET: 08171 AP CLAIMS 09/14/2016
VENDOR SET: 01
FUND : 001 GENERAL FUND
DEPARTMENT: 021 CITY GARAGE BANK: 601
BUDGET TO USE: CB-CURRENT BUDGET

VENDOR NAME	ITEM #	G/L ACCOUNT NAME	DESCRIPTION	CHECK#	AMOUNT
01-000328 JIMMIE'S AUTO SUPPLY LL					
	I-170755	001-021-541.50-71	OIL AND LUBRI BLANKET PO	164746	26.04
	I-170796	001-021-541.50-71	OIL AND LUBRI BLANKET PO	164746	71.83
	I-171392	001-021-541.50-71	OIL AND LUBRI BLANKET PO	164746	68.70
	I-171470	001-021-541.50-71	OIL AND LUBRI BLANKET PO	164746	68.00
	I-172791	001-021-541.50-63	VEHICLE MAINT ALTENATOR FOR GARAGE #84	164746	183.34
	I-173127	001-021-541.50-69	OTHER EQUIP P BLANKET PO	164746	19.95
	I-173156	001-021-541.50-69	OTHER EQUIP P BLANKET PO	164746	27.67
	I-173329	001-021-541.50-69	OTHER EQUIP P BLANKET PO	164746	25.99
	I-173415	001-021-541.50-69	OTHER EQUIP P BLANKET PO	164746	117.21
	I-173676	001-021-541.50-69	OTHER EQUIP P TRACKHOE PARTS	164746	219.98
	I-173992	001-021-541.50-71	OIL AND LUBRI BLANKET PO	164746	121.26
	I-174180	001-021-541.50-69	OTHER EQUIP P BLANKET PO	164746	20.50
01-000525 THE SIGN DEPOT,LLC					
	I-16231	001-021-541.50-63	VEHICLE MAINT CITY DECALS FOR ALL DEPTS.	164845	206.01
01-000540 AT&T					
	I-08/2016-7608 1	001-021-541.30-31	PHONE & TELEC GARAGE	164637	5.70
01-000624 CINTAS CORP					
	I-618750016	001-021-541.50-54	UNIFORMS BLANKET PO FOR UNIFORMS	164666	54.75
	I-618750700	001-021-541.50-54	UNIFORMS BLANKET PO FOR UNIFORMS	164666	54.75
	I-618751383	001-021-541.50-54	UNIFORMS BLANKET PO FOR UNIFORMS	164666	54.75
	I-618752064	001-021-541.50-54	UNIFORMS BLANKET PO FOR UNIFORMS	164666	54.75
01-002010 DAVIS FLEET PARTS					
	I-621918	001-021-541.50-71	OIL AND LUBRI BLANKET PO---OILS & LUBS.	164684	108.65
	I-622199	001-021-541.50-71	OIL AND LUBRI BLANKET PO---OILS & LUBS.	164684	59.26
	I-622809	001-021-541.50-71	OIL AND LUBRI BLANKET PO---OILS & LUBS.	164684	300.59
01-002068 RED RIVER FORD LINCOLN					
	I-5027721	001-021-541.50-63	VEHICLE MAINT A/C LINE #84	164813	84.13
01-003100 FUELMAN OF SOUTHERN OKL					
	I-08/2016-BG159577	001-021-541.50-52	FUEL FUEL -GARAGE	000000	0.00
01-004143 TOUCHTONE COMMUNICATION					
	I-08/2016-809247222	001-021-541.30-31	PHONE & TELEC LONG DISTANCE GARAGE	164851	0.00
01-004439 CHEMSEARCH					
	I-2400408	001-021-541.50-61	MINOR TOOLS A DEODRIZER	164662	356.00
01-004980 DOUGLASS DISTRIBUTING					
	I-08/2016-DURCIT	001-021-541.50-52	FUEL GARAGE	164689	20.67
	I-08/2016A-DURCIT	001-021-541.50-52	FUEL GARAGE	164689	24.58
	I-08/2016B-DURCIT	001-021-541.50-52	FUEL GARAGE	164689	25.07
	I-08/2016C-DURCIT	001-021-541.50-52	FUEL GARAGE	164689	19.76
	I-08/2016D-DURCIT	001-021-541.50-52	FUEL GARAGE	164689	26.97

PACKET: 08171 AP CLAIMS 09/14/2016
VENDOR SET: 01
FUND : 001 GENERAL FUND
DEPARTMENT: 021 CITY GARAGE BANK: 601
BUDGET TO USE: CB-CURRENT BUDGET

VENDOR	NAME	ITEM #	G/L ACCOUNT NAME	DESCRIPTION	CHECK#	AMOUNT
01-005070	G & K PRINTING COMPANY					
		I-08.05.16	001-021-541.50-69	OTHER EQUIP P WORK ORDER BOOKS	164723	92.00
01-005168	CASTEEL'S TIRE (CALERA)					
		I-1-GS52134	001-021-541.50-63	VEHICLE MAINT NESW TIRES #PD097-2	164656	239.72
				DEPARTMENT 021 CITY GARAGE	TOTAL:	2,758.58

PACKET: 08171 AP CLAIMS 09/14/2016
VENDOR SET: 01
FUND : 001 GENERAL FUND
DEPARTMENT: 023 SENIOR CITIZENS CENTER BANK: 601
BUDGET TO USE: CB-CURRENT BUDGET

VENDOR NAME	ITEM #	G/L ACCOUNT NAME	DESCRIPTION	CHECK#	AMOUNT
01-000381 OKLAHOMA NATURAL GAS					
	I-AUG 2016	001-023-592.30-33	UTILITIES SR BLDG 210474645 1433280 27	164792	69.18
01-000450 OKLAHOMA GAS AND ELECTR					
	I-08/2016-129166792	001-023-592.30-33	UTILITIES ELECTRIC SERVICE-SR CITIZEN	164776	0.00
	I-08/2016-35948044	001-023-592.30-33	UTILITIES SENIOR CENTER-ELECTRIC	164776	1,308.71
01-000624 CINTAS CORP					
	I-618750011	001-023-592.50-58	BUILDING AND DRAIN CLEANER	164666	25.00
	I-618750695	001-023-592.50-58	BUILDING AND DRAIN CLEANER	164666	25.00
	I-618751378	001-023-592.50-58	BUILDING AND DRAIN CLEANER	164666	25.00
	I-618752059	001-023-592.50-58	BUILDING AND DRAIN CLEANER	164666	25.00
01-003045 SOUTHEASTERN ALARM CO					
	I-1860-6815	001-023-592.30-58	SECURITY MAIN ALARM MONITORING	164828	65.00
01-005785 HUNTER HEAT & AIR LLC					
	I-24202146	001-023-592.50-58	BUILDING AND A/C REPAIRS	164742	701.20
	I-24268373	001-023-592.50-58	BUILDING AND KITCHEN A/C REPAIR	164742	161.00

DEPARTMENT 023 SENIOR CITIZENS CENTER TOTAL: 2,405.09

FUND 001 GENERAL FUND TOTAL: 222,015.21

PACKET: 08171 AP CLAIMS 09/14/2016
VENDOR SET: 01
FUND : 004 FED BLDG ENTERPRISE FUND
DEPARTMENT: 037 WHEELER FEDERAL BUILDING BANK: 601
BUDGET TO USE: CB-CURRENT BUDGET

VENDOR	NAME	ITEM #	G/L ACCOUNT NAME		DESCRIPTION	CHECK#	AMOUNT
01-000450	OKLAHOMA GAS AND ELECTR						
		I-08/2016-129166792	004-037-596.30-33	UTILITIES	ELECTRIC SERVICE - FED BLDG	164776	0.00
				DEPARTMENT 037	WHEELER FEDERAL BUILDING TOTAL:		0.00
				FUND 004	FED BLDG ENTERPRISE FUND TOTAL:		0.00

PACKET: 08171 AP CLAIMS 09/14/2016
VENDOR SET: 01
FUND : 005 EMPLOYEE INSURANCE FUND
DEPARTMENT: 066 EMPLOYEE HEALTH INS. BANK: 601
BUDGET TO USE: CB-CURRENT BUDGET

VENDOR	NAME	ITEM #	G/L ACCOUNT NAME	DESCRIPTION	CHECK#	AMOUNT
01-003057	EQUITABLE PLAN SERVICES					
		I-SEPT 2016	005-066-569.20-11	ADMINISTRATIV ADMINISTRATIVE FEE	164702	3,575.35
		I-SEPT 2016	005-066-569.20-12	SPECIFIC PREM SPECIFIC PREMIUM	164702	30,118.29
		I-SEPT 2016	005-066-569.20-13	ANNUAL AGGREG ANNUAL AGGREGATE FEE	164702	862.99
				DEPARTMENT 066 EMPLOYEE HEALTH INS. TOTAL:		34,556.63
				FUND 005 EMPLOYEE INSURANCE FUND TOTAL:		34,556.63

PACKET: 08171 AP CLAIMS 09/14/2016
VENDOR SET: 01
FUND : 010 INFO. TECH. SERVICE FUND
DEPARTMENT: 020 INFO. TECH. SERVICE DEPT. BANK: 601
BUDGET TO USE: CB-CURRENT BUDGET

VENDOR NAME	ITEM #	G/L ACCOUNT NAME	DESCRIPTION	CHECK#	AMOUNT
01-000309 US CELLULAR					
	I-0150154083	010-020-560.30-31	PHONE & TELEC IT DUWAYNE #580-775-3780	164856	87.77
01-000328 JIMMIE'S AUTO SUPPLY LL					
	I-172422	010-020-560.50-69	OTHER EQUIP P STARTER #900HHR	164746	108.70
01-002242 JP MORGAN CHASE - BANK					
	I-0338-3322-0816	010-020-560.30-40	INTERNET SERV RISE BROADBAND LANDFILL	000000	93.43
	I-0338-3322-0816	010-020-560.30-40	INTERNET SERV RISE BROADBAND EMER. MAN.	000000	84.75
	I-0338-3322-0816	010-020-560.30-40	INTERNET SERV RISE BROADBAND SPORTS COMP.	000000	74.93
	I-0338-3322-0816	010-020-560.50-49	NETWORK PRINT IT TONER	000000	1,154.81
	I-0338-3322-0816	010-020-560.50-69	OTHER EQUIP P IT PARTS AND ACCES.	000000	359.10
	I-0338-3322-0816	010-020-560.30-31	PHONE & TELEC EFAX CLERK	000000	20.00
	I-2523-6708-0816	010-020-560.30-50	SOFTWARE/SERV SOFTWARE/SERVER MAINT.	000000	540.00
01-002246 COMPUTER SERVICES OF DU					
	I-701666	010-020-560.30-51	CONTRACT LABO CONTRACT LABOR	164674	1,000.00
	I-701666	010-020-560.30-51	CONTRACT LABO CONTRACT LABOR	164674	500.00
01-003739 CDW GOVERNMENT, INC.					
	I-DTX9211	010-020-560.50-49	NETWORK PRINT NETWORK PRINTER SUPPLIES	164658	236.90
	I-FBN0798	010-020-560.30-52	GIS SERVICES PLOTTER SUPPLIES	164658	142.50
01-003910 DELL INC.					
	I-XK15XCWJ4	010-020-560.80-01	HARDWARE PURC REPLACEMENT BATTERIES	164687	419.90
	I-XK1846WN8	010-020-560.80-01	HARDWARE PURC PD LAPTOPS & TONERS	164687	524.95
	I-XK1D8R5C7	010-020-560.80-01	HARDWARE PURC PD LAPTOPS & TONERS	164687	100.93
	I-XK1D95C92	010-020-560.80-01	HARDWARE PURC PD LAPTOPS & TONERS	164687	365.71
01-004143 TOUCHTONE COMMUNICATION					
	I-08/2016-809247222	010-020-560.30-31	PHONE & TELEC LONG DISTANCE IT INFO	164851	2.53
01-004713 TYLER TECHNOLOGIES, INC					
	I-025-162406	010-020-560.30-90	ACCOUNTING SO SOFTWARE MODULE SUPPORT & MAIN	164853	13,172.57
	I-025-164961	010-020-560.30-90	ACCOUNTING SO SOFTWARE MODULE SUPPORT & MAIN	164853	16,345.36
01-005303 RICOH USA, INC.					
	I-1064800711	010-020-560.30-52	GIS SERVICES AUTOCAD SUPPLIES FOR PLOTTER	164815	133.00
	I-5043459654	010-020-560.30-35	COPIER LEASE COPIER LEASE & USE FEES	164815	60.50
	I-5043500602	010-020-560.30-35	COPIER LEASE COPIER LEASE & USE FEES	164815	21.69
	I-5043500603	010-020-560.30-35	COPIER LEASE COPIER LEASE & USE FEES	164815	224.29
	I-5043526342	010-020-560.30-35	COPIER LEASE COPIER LEASE & USE FEES	164815	284.30
	I-5043562823	010-020-560.30-35	COPIER LEASE COPIER LEASE & USE FEES	164815	34.00
	I-5043562900	010-020-560.30-35	COPIER LEASE COPIER LEASE & USE FEES	164815	50.00
	I-5044037597	010-020-560.30-35	COPIER LEASE COPIER LEASE & USE FEES	164815	66.73
	I-5044060612	010-020-560.30-35	COPIER LEASE COPIER LEASE & USE FEES	164815	64.56
	I-5044060613	010-020-560.30-35	COPIER LEASE COPIER LEASE & USE FEES	164815	21.69
	I-5044092882	010-020-560.30-35	COPIER LEASE COPIER LEASE & USE FEES	164815	89.52
	I-5044143528	010-020-560.30-35	COPIER LEASE COPIER LEASE & USE FEES	164815	34.00

PACKET: 08171 AP CLAIMS 09/14/2016
VENDOR SET: 01
FUND : 010 INFO. TECH. SERVICE FUND
DEPARTMENT: 020 INFO. TECH. SERVICE DEPT. BANK: 601
BUDGET TO USE: CB-CURRENT BUDGET

VENDOR NAME	ITEM #	G/L ACCOUNT NAME	DESCRIPTION	CHECK#	AMOUNT
01-005304 RICOH USA, INC. (FINANC					
	I-97178342	010-020-560.30-35	COPIER LEASE COPIER RENTAL & ADD. IMAGES	000000	295.24
	I-97187548	010-020-560.30-35	COPIER LEASE COPIER RENTAL & ADD. IMAGES	000000	1,314.46
	I-97247628	010-020-560.30-35	COPIER LEASE COPIER RENTAL & ADD. IMAGES	000000	295.32
	I-97293340	010-020-560.30-35	COPIER LEASE COPIER RENTAL & ADD. IMAGES	000000	413.56
	I-97346534	010-020-560.30-35	COPIER LEASE COPIER RENTAL & ADD. IMAGES	000000	573.52
01-005430 VERIZON WIRELESS					
	I-08/2016-5457 0003	010-020-560.30-40	INTERNET SERV IT DATA PLAN/TABLETS	164860	360.09
	I-08/2016-5457-0002	010-020-560.80-03	NETWORK HARDW EQUIPMENT CHARGES	164860	3,299.94
01-005642 VYVE					
	I-AUG 2016	010-020-560.30-40	INTERNET SERV FD 301020649 1200 GAIL FARRELL	164867	78.50
	I-AUG 2016	010-020-560.30-40	INTERNET SERV IT 301027153 300 W EVERGREEN	164867	500.00
	I-AUG 2016	010-020-560.30-40	INTERNET SERV EM 301084275 2808 ENTERPRISE	164867	60.03
	I-AUG 2016	010-020-560.30-40	INTERNET SERV FD 301086688 120 N 1ST AVE	164867	0.00
	I-AUG 2016	010-020-560.30-40	INTERNET SERV PD 301178940 3200 CARL ALBERT	164867	100.04
	I-AUG 2016	010-020-560.30-40	INTERNET SERV FD 301019440 120 N 1ST AVE B	164867	33.08
	I-AUG 2016	010-020-560.30-40	INTERNET SERV GG 301082830 3801 N 1ST AVE	164867	65.95
01-005758 NOVUSOLUTIONS					
	I-24171	010-020-560.30-70	AGENDA PREP S NOVUSAGENDA MEMBERSHIP	164773	4,950.00

DEPARTMENT 020 INFO. TECH. SERVICE DEPT.TOTAL: 48,758.85

FUND 010 INFO. TECH. SERVICE FUND TOTAL: 48,758.85

PACKET: 08171 AP CLAIMS 09/14/2016
VENDOR SET: 01
FUND : 015 CAPITAL IMPROVEMENTS FUND
DEPARTMENT: 008 FIRE DEPARTMENT BANK: 601
BUDGET TO USE: CB-CURRENT BUDGET

VENDOR	NAME	ITEM #	G/L ACCOUNT NAME	DESCRIPTION	CHECK#	AMOUNT
01-005836	RB&T ENTERPRISES, INC.					
		I-1838	015-008-522.61-48	FY17 OEC GRNT SWIFTWATER I RESCUE TRAINING	164810	3,510.00
				DEPARTMENT 008 FIRE DEPARTMENT TOTAL:		3,510.00

PACKET: 08171 AP CLAIMS 09/14/2016
VENDOR SET: 01
FUND : 015 CAPITAL IMPROVEMENTS FUND
DEPARTMENT: 009 PARKS & GENERAL SERVICES BANK: 601
BUDGET TO USE: CB-CURRENT BUDGET

VENDOR NAME	ITEM #	G/L ACCOUNT NAME	DESCRIPTION	CHECK#	AMOUNT
01-000007 DEALERS ELECTRICAL SUPP					
	I-4684342-00	015-009-532.62-12	FY14 TSET EXP ELECTRICAL FOR LIGHTS	164686	849.96
	I-4684494-00	015-009-532.62-12	FY14 TSET EXP ELECTRICAL FOR LIGHTS	164686	472.08
	I-4684495-00	015-009-532.62-12	FY14 TSET EXP ELECTRICAL FOR LIGHTS	164686	72.56
01-000164 DURANT TRUE VALUE LUMBE					
	I-591023	015-009-532.62-12	FY14 TSET EXP PLYWOOD, SHINGLES FOR ROOF	164695	294.99
	I-591150	015-009-532.62-12	FY14 TSET EXP PLYWOOD, SHINGLES FOR ROOF	164695	737.64
	I-591242	015-009-532.62-12	FY14 TSET EXP PLYWOOD, SHINGLES FOR ROOF	164695	97.48
	I-591255	015-009-532.62-12	FY14 TSET EXP PLYWOOD, SHINGLES FOR ROOF	164695	15.98
	I-591271	015-009-532.62-12	FY14 TSET EXP PLYWOOD, SHINGLES FOR ROOF	164695	499.95
	I-591305	015-009-532.62-12	FY14 TSET EXP PLYWOOD, SHINGLES FOR ROOF	164695	17.94
	I-591548	015-009-532.62-15	FY17 ROCKET P PLYWOOD, SHINGLES FOR ROOF	164695	66.93
	I-591746	015-009-532.62-15	FY17 ROCKET P PLYWOOD, SHINGLES FOR ROOF	164695	138.25
	I-591810	015-009-532.62-15	FY17 ROCKET P PLYWOOD, SHINGLES FOR ROOF	164695	517.71
	I-591812	015-009-532.62-15	FY17 ROCKET P PLYWOOD, SHINGLES FOR ROOF	164695	93.80
	I-591820	015-009-532.62-15	FY17 ROCKET P PLYWOOD, SHINGLES FOR ROOF	164695	17.99
01-001197 THE SHERWIN WILLIAMS CO					
	I-3627-7	015-009-532.62-12	FY14 TSET EXP BLANKET PO	164822	165.32
01-002242 JP MORGAN CHASE - BANK					
	I-0253-9452-0816	015-009-532.62-12	FY14 TSET EXP BLOCK FILLER	000000	98.85
01-005139 TEXOMA MFG. LLC					
	I-7303	015-009-532.62-12	FY14 TSET EXP REMOVE, INSTALL NEW WOOD POLES	164841	7,500.00
01-005765 TEXHOMA TRUSS LLC					
	I-TEX-232072516	015-009-532.62-15	FY17 ROCKET P TRUSSES FOR RESTROOMS	164837	500.00
	I-TEX-232072516-2	015-009-532.62-12	FY14 TSET EXP TRUSSES FOR RESTROOMS	164837	500.00

DEPARTMENT 009 PARKS & GENERAL SERVICES TOTAL: 12,657.43

PACKET: 08171 AP CLAIMS 09/14/2016
VENDOR SET: 01
FUND : 015 CAPITAL IMPROVEMENTS FUND
DEPARTMENT: 016 STREET DEPARTMENT BANK: 601
BUDGET TO USE: CB-CURRENT BUDGET

VENDOR	NAME	ITEM #	G/L ACCOUNT NAME	DESCRIPTION	CHECK#	AMOUNT
01-000152	DURANT DAILY DEMOCRAT					
		I-301887340	015-016-541.62-95	FY17 MIDDLE S DMS DRAINAGE PROJECT AD	164692	23.25
				DEPARTMENT 016 STREET DEPARTMENT TOTAL:		23.25

PACKET: 08171 AP CLAIMS 09/14/2016
VENDOR SET: 01
FUND : 015 CAPITAL IMPROVEMENTS FUND
DEPARTMENT: 019 GENERAL GOVERNMENT BANK: 601
BUDGET TO USE: CB-CURRENT BUDGET

VENDOR NAME	ITEM #	G/L ACCOUNT NAME	DESCRIPTION	CHECK#	AMOUNT
01-000551 FIRST UNITED BANK & TRU					
	I-08/2016-USSTR 06	015-019-569.85-23	NOTE PAYABLE- USSTR SERIES2006 PRINCIPAL	164712	12,700.00
	I-08/2016-USSTR 06	015-019-569.85-23	NOTE PAYABLE- USSTR SERIES2006 INTEREST	164712	990.99
01-001313 LANDMARK BANK					
	I-08/2016-414050002	015-019-569.85-47	FY12 AUTOMATE PETERBILT CAB & CHASSIS PRINC.	164757	3,743.63
	I-08/2016-414050002	015-019-569.85-47	FY12 AUTOMATE PETERBILT CAB & CHASSIS INT.	164757	87.07
	I-08/2016-414050002	015-019-569.85-49	FY12 SWC COMP 5000 COMPACTOR BODY-PRINC.	164757	1,378.38
	I-08/2016-414050002	015-019-569.85-49	FY12 SWC COMP 5000 COMPACTOR BODY-INT.	164757	32.06
	I-08/2016-414050049	015-019-569.85-63	FY15 (4) PD T PRINCIPAL 4 2015 TAHOES PD	164758	2,627.64
	I-08/2016-414050049	015-019-569.85-63	FY15 (4) PD T INTEREST 4 2015 TAHOES PD	164758	239.22
01-002229 FIRST UNITED BANK & TRU					
	I-08/2016-400926994	015-019-569.85-45	FY12 GARAGE F 2011 FORKLIFT -INTEREST	164715	3.89
	I-08/2016-400926994	015-019-569.85-45	FY12 GARAGE F 2011 FORKLIFT -PRINCIPAL	164715	1,229.42
	I-08/2016-401067145	015-019-569.85-56	FY13 STREET B INTEREST 2012 JD 410 BACKHOE	164716	71.16
	I-08/2016-401067145	015-019-569.85-56	FY13 STREET B PRINCIPAL 2012 JD 410 BACKHOE	164716	2,008.80
	I-08/2016-402092266	015-019-569.85-57	FY13 PD VEHIC PRIN.2013 PD VEHICLELS/ANIMAL	164717	5,786.33
	I-08/2016-402092266	015-019-569.85-57	FY13 PD VEHIC INT.2013 PD VEHICLELS/ANIMAL	164717	14.58
01-003224 VISION BANK					
	I-08/2016-280001126	015-019-569.85-59	FY14 SWC- ROL INTEREST 2014 ROLL OFF TRUCK	164862	43.46
	I-08/2016-280001126	015-019-569.85-59	FY14 SWC- ROL PRINCIPAL 2014 ROLL OFF TRUCK	164862	5,225.85
	I-08/2016-42000313	015-019-569.85-34	DMSC FIELD LI DMSC LIGHTING -- PRINCIPAL	164863	1,979.45
	I-08/2016-42000313	015-019-569.85-34	DMSC FIELD LI DMSC LIGHTING INTEREST	164863	165.35
	I-08/2016-428001469	015-019-569.85-62	FY14 STREET D PRIN2 DUMP TRUCKS STREET DEPT	164864	4,503.38
	I-08/2016-428001469	015-019-569.85-62	FY14 STREET D INT 2 DUMP TRUCKS STREET DEPT	164864	333.69
01-005498 RONALD F. & CAROLYN K.					
	I-08/2016-C-2013-38	015-019-569.85-61	FY14 OLD COUN COUNTRY CLUB PROPERTY INTEREST	164818	334.33
	I-08/2016-PC201338	015-019-569.85-61	FY14 OLD COUN COUNTRY CLUB PRIN. C-2013-38	164818	5,665.85
			DEPARTMENT 019 GENERAL GOVERNMENT TOTAL:		49,164.53

PACKET: 08171 AP CLAIMS 09/14/2016
VENDOR SET: 01
FUND : 015 CAPITAL IMPROVEMENTS FUND
DEPARTMENT: 405 2007 U.S.S.T.R.NOTE DISB. BANK: 601
BUDGET TO USE: CB-CURRENT BUDGET

VENDOR	NAME	ITEM #	G/L ACCOUNT NAME	DESCRIPTION	CHECK#	AMOUNT
01-005423	MTS DRYWALL INC					
		I-160525-1	015-405-555.61-40	EOC ROADWAY & 17 PIECES OF DRYWALL	164769	198.97
				DEPARTMENT 405 2007 U.S.S.T.R.NOTE DISB.TOTAL:		198.97
				FUND 015 CAPITAL IMPROVEMENTS FUNDTOTAL:		65,554.18

PACKET: 08171 AP CLAIMS 09/14/2016
VENDOR SET: 01
FUND : 020 DURANT INDUSTRIAL AUTH.
DEPARTMENT: 017 ECON. DEV. ADMINISTRATION BANK: 601
BUDGET TO USE: CB-CURRENT BUDGET

VENDOR NAME	ITEM #	G/L ACCOUNT NAME	DESCRIPTION	CHECK#	AMOUNT
01-000152 DURANT DAILY DEMOCRAT					
	I-301857700	020-017-537.30-38	PUBLICATIONS DISCOVER DURANT AD	164692	965.00
	I-301873616	020-017-537.30-38	PUBLICATIONS SERVICE CHARGES 1605	164692	14.48
01-000346 DURANT AREA CHAMBER OF					
	I- AUGUST 2016	020-017-537.50-50	PHOTOCOPIES MONTHLY COPIER RENT	164691	160.00
	I-AUGUST 2016	020-017-537.50-50	PHOTOCOPIES MONTHLY COPIER RENT	164691	1,225.00
01-000540 AT&T					
	I-08/2016-7608 1	020-017-537.30-31	PHONE & TELEC ECONOMIC DEVELOPMENT	164637	11.40
01-000620 AT&T MOBILITY (CINGULA					
	I-752164X09012016	020-017-537.30-31	PHONE & TELEC DIA MONTHLY CELL PHONE BILLING	164639	52.69
01-000944 CRAWFORD & ASSOCIATES P					
	I-10030	020-017-537.20-21	AUDIT FEES (P AUDIT PREPARATION	164678	48.56
	I-9979	020-017-537.20-21	AUDIT FEES (P AUDIT PREPARATION	164678	96.53
01-001361 GOVERNOR'S ECON.DEV. MA					
	I-ANNUAL DUES	020-017-537.50-57	MEMBERSHIPS MEMBER ANNUAL DUES	164728	500.00
	I-APPLICATION FEE	020-017-537.50-57	MEMBERSHIPS MEMBER APPLICATION FEE	164729	100.00
01-002194 FEDERAL EXPRESS					
	I-5-488-08581	020-017-537.30-32	POSTAGE AND F FED EX SERVICES	164709	32.28
01-002242 JP MORGAN CHASE - BANK					
	I-0327-5585-0816	020-017-537.50-63	VEHICLE MAINT CAR WASH	000000	10.00
	I-0327-5585-0816	020-017-537.70-72	TRAINING & TR BRAUMS	000000	2.39
	I-0327-5585-0816	020-017-537.70-72	TRAINING & TR ROADHOUSE	000000	41.30
	I-0327-5585-0816	020-017-537.70-72	TRAINING & TR MCDONALDS	000000	20.84
	I-0327-5585-0816	020-017-537.70-72	TRAINING & TR IHOP	000000	16.76
01-003100 FUELMAN OF SOUTHERN OKL					
	I-08/2016-BG159577	020-017-537.50-52	FUEL FUEL-ECONOMIC DEVELOPMENT	000000	104.85
01-003190 P.L. PAT PHELPS					
	I-1614	020-017-537.30-36	CONSULTING FE DIA LEGAL SERVICES	164803	87.50
01-004143 TOUCHTONE COMMUNICATION					
	I-08/2016-809247222	020-017-537.30-31	PHONE & TELEC LONG DISTANCE CHGS ECON DEV	164851	0.00
01-005807 LOUCINDA FRENCH					
	I-AUG 2016	020-017-537.50-62	JANITORIAL SE BLANKET PO	164721	30.00

DEPARTMENT 017 ECON. DEV. ADMINISTRATIONTOTAL: 3,519.58

PACKET: 08171 AP CLAIMS 09/14/2016
VENDOR SET: 01
FUND : 020 DURANT INDUSTRIAL AUTH.
DEPARTMENT: 067 INDUSTRIAL PROJECTS BANK: 601
BUDGET TO USE: CB-CURRENT BUDGET

VENDOR	NAME	ITEM #	G/L ACCOUNT NAME	DESCRIPTION	CHECK#	AMOUNT
01-001602	OKLAHOMA DEPARTMENT OF					
		I-08/2016-10712	020-067-596.66-12	BL - CDBG LOA LOAN 10712 PMT 151 OF 240	164780	2,083.34
		I-08/2016-11124ED87	020-067-596.66-13	CG - CDBG LOA 11124 ED 87 PMT 141 OF 240	164781	1,666.67
		I-08/2016-12491ES	020-067-596.66-17	ES - CDBG LOA CDBG #12491 - EAGLE SUSPENSION	164782	1,666.48
		I-08/2016-9131CDBG	020-067-596.66-11	CMP - CDBG LO 9131CDBG-EDIF99-	164783	1,250.00
		I-08/2016-CDBG#1210	020-067-596.66-15	EB - CDBG LOA EARTH BIOFUELS CDBG	164784	354.17
01-005269	CHERYL JACKSON					
		I-08/2016-INTEREST	020-067-596.68-01	CG LAND ACQUI INTEREST CARDINAL GLASS LAND	164664	722.29
		I-08/2016-LAND PRIN	020-067-596.68-01	CG LAND ACQUI CARDINAL GLASS LAND PRINCIPAL	164664	1,685.32
01-005270	JOHN JACKSON					
		I-08/2016-INTEREST	020-067-596.68-01	CG LAND ACQUI INTEREST CARDINAL GLASS LAND	164753	722.29
		I-08/2016-LAND PRIN	020-067-596.68-01	CG LAND ACQUI CARDNIAL LAND PURCHASE	164753	1,685.31

DEPARTMENT 067 INDUSTRIAL PROJECTS TOTAL: 11,835.87

FUND 020 DURANT INDUSTRIAL AUTH. TOTAL: 15,355.45

PACKET: 08171 AP CLAIMS 09/14/2016
VENDOR SET: 01
FUND : 101 SPECIAL 911 TAX FUND
DEPARTMENT: 007 911 COMMUNICATIONS CTR. BANK: 601
BUDGET TO USE: CB-CURRENT BUDGET

VENDOR NAME	ITEM #	G/L ACCOUNT NAME	DESCRIPTION	CHECK#	AMOUNT
01-000540 AT&T					
	I-08/2016-7608 1	101-007-527.30-31	PHONE & TELEC 911 COMM CENTER	164637	1,220.75
	I-08/2016-E 911	101-007-527.30-31	PHONE & TELEC E-911 PHONE	164637	2,000.36
	I-08/2016-E911 WIRE	101-007-527.30-31	PHONE & TELEC E911 DURANT WIRELESS	164637	216.03
01-000820 OK DEPT OF PUBLIC SAFET					
	I-04-1700922	101-007-527.30-53	COMMUNICATION OLETS AUG 2016	164786	350.00
01-000919 A & M ENGRAVING & TROPH					
	I-08.15.16	101-007-527.50-57	MEMBERSHIPS NOTARY STAMP	164631	40.00
	I-PD08.15.16	101-007-527.50-51	OFFICE SUPPLI NAME PLATES,PLAQUES,AWARDS	164631	5.00
01-000944 CRAWFORD & ASSOCIATES P					
	I-10030	101-007-527.20-21	PRORATED AUDI AUDIT PREPARATION	164678	5.71
	I-9979	101-007-527.20-21	PRORATED AUDI AUDIT PREPARATION	164678	11.35
01-001671 SOUTHEASTERN ELECTRIC					
	I-AUG 2016	101-007-527.30-33	UTILITIES 911TWR #303-294-6712 16370-001	164829	54.23
	I-AUG 2016	101-007-527.30-33	UTILITIES BOSWELL 1PH 16370-018	164829	0.00
01-002242 JP MORGAN CHASE - BANK					
	I-0333-0018-0816	101-007-527.50-57	MEMBERSHIPS 911 NOTARY APP & FILING FEES	000000	20.80
	I-2523-7656-0816	101-007-527.70-72	TRAINING & TR REGISTRATIONS	000000	238.00
01-004826 CHEROKEE TELEPHONE COMP					
	I-08/2016-19791SD91	101-007-527.30-31	PHONE & TELEC PD-911 COMM	164663	281.00
	I-08/2016-2226878	101-007-527.30-31	PHONE & TELEC 911 DLS ACHILLE TOWER	164663	43.25
01-005430 VERIZON WIRELESS					
	I-08/2016-5457-0002	101-007-527.30-53	COMMUNICATION PD AIR CARDS	164860	1,626.24

DEPARTMENT 007 911 COMMUNICATIONS CTR. TOTAL: 6,112.72

FUND 101 SPECIAL 911 TAX FUND TOTAL: 6,112.72

PACKET: 08171 AP CLAIMS 09/14/2016
VENDOR SET: 01
FUND : 206 DURANT AIRPORT AUTHORITY
DEPARTMENT: 065 EAKER FIELD BANK: 601
BUDGET TO USE: CB-CURRENT BUDGET

VENDOR NAME	ITEM #	G/L ACCOUNT NAME	DESCRIPTION	CHECK#	AMOUNT
01-000381 OKLAHOMA NATURAL GAS					
	I-AUG 2016	206-065-503.30-33 UTILITIES	AIRPORT 210477682 1435694 64	164792	100.35
01-000450 OKLAHOMA GAS AND ELECTR					
	I-08/2016- 35948058	206-065-503.30-33 UTILITIES	AIRPORT	164776	1,606.41
	I-08/2016-129313772	206-065-503.30-33 UTILITIES	OG&E AIRPORT PAPI'S & REIL'S	164776	25.71
	I-08/2016-130578288	206-065-503.30-33 UTILITIES	10 WALDRON DR #N HAN	164776	53.17
	I-08/2016-35948044	206-065-503.30-33 UTILITIES	AIRPORT-ELECTRIC	164776	106.60
01-000500 RAYMOND'S AUTO SUPPLY I					
	I-434694	206-065-503.50-63 VEHICLE MAINT	WINDSHIELD WIPERS---2 VANS	164809	55.03
01-000540 AT&T					
	I-08/2016-7608 1	206-065-503.30-31 PHONE & TELEC	AIRPORT	164637	116.64
	I-08/2016-920-0574	206-065-503.30-31 PHONE & TELEC	AIRPORT	164637	180.43
01-000944 CRAWFORD & ASSOCIATES P					
	I-10030	206-065-503.20-21 PRORATED AUDI	AUDIT PREPARATION	164678	6.66
	I-9979	206-065-503.20-21 PRORATED AUDI	AUDIT PREPARATION	164678	13.23
01-001204 COUSINS ELECTRONIC SERV					
	I-08152016	206-065-503.30-55 AWOS TELECOM	BLANKET PO----AWOS MAINTENANCE	164677	250.00
01-001443 VAISALA INC					
	I-301050389	206-065-503.30-55 AWOS TELECOM	BLANKET PO----VAISALA	164859	245.00
01-001861 D/W AVIATION					
	I-AUG 2016	206-065-503.30-66 OPERATOR'S SH	OPERATOR SHARE IN SALES	164680	12,414.02
01-001951 BETTY ROBERTSON					
	I-89	206-065-503.30-48 JANITORIAL SE	AIRPORT JANITORIAL SERVICES	164643	289.33
01-002445 LBR INC AIRPORT CONSULT					
	I-5176	206-065-503.80-05 FY16 10 T HAN	CONSTRUCTION TESTING	164760	5,373.00
01-003100 FUELMAN OF SOUTHERN OKL					
	I-08/2016-BG159577	206-065-503.50-52 FUEL FOR SERV	FUEL-AIRPORT	000000	0.00
01-003190 P.L. PAT PHELPS					
	I-1607	206-065-503.30-51 CONTRACT LABO	LEGAL SERVICES	164803	455.00
01-003224 VISION BANK					
	I-08/2016-428002756	206-065-503.90-90 FY16 10 T HAN	INT. 2016 AIRPORT 10-T-HANGAR	164865	1,351.51
	I-08/2016-428002756	206-065-503.90-89 FY16 10 T HAN	PRIN. 2016 AIRPORT 10-T-HANGAR	164865	3,141.91
01-003734 AVFUEL CORPORATION					
	I-008679554	206-065-503.70-86 JET FUEL PURC	JET FUEL	000000	13,991.59
01-004980 DOUGLASS DISTRIBUTING					

PACKET: 08171 AP CLAIMS 09/14/2016
VENDOR SET: 01
FUND : 206 DURANT AIRPORT AUTHORITY
DEPARTMENT: 065 EAKER FIELD BANK: 601
BUDGET TO USE: CB-CURRENT BUDGET

VENDOR NAME	ITEM #	G/L ACCOUNT NAME	DESCRIPTION	CHECK#	AMOUNT
01-004980 DOUGLASS DISTRIBUTING continued					
	I-08/2016-DURCIT	206-065-503.50-52	FUEL FOR SERV AIRPORT	164689	12.32
	I-08/2016A-DURCIT	206-065-503.50-52	FUEL FOR SERV AIRPORT	164689	14.66
	I-08/2016B-DURCIT	206-065-503.50-52	FUEL FOR SERV AIRPORT	164689	14.95
	I-08/2016C-DURCIT	206-065-503.50-52	FUEL FOR SERV AIRPORT	164689	11.78
	I-08/2016D-DURCIT	206-065-503.50-52	FUEL FOR SERV AIRPORT	164689	16.08
01-004988 DIRECTTV					
	I-08/2016-033109525	206-065-503.30-33	UTILITIES MONTHLY SERVICE	164688	161.98
01-005797 CONTECH, INC					
	I-PAY APP. #3	206-065-503.80-05	FY16 10 T HAN (10) UNIT T-HANGARS	164675	108,328.50

DEPARTMENT 065 EAKER FIELD TOTAL: 148,335.86

FUND 206 DURANT AIRPORT AUTHORITY TOTAL: 148,335.86

PACKET: 08171 AP CLAIMS 09/14/2016
VENDOR SET: 01
FUND : 210 U A BONDS SINKING FUND
DEPARTMENT: N/A NON-DEPARTMENTAL BANK: 601
BUDGET TO USE: CB-CURRENT BUDGET

VENDOR	NAME	ITEM #	G/L ACCOUNT NAME	DESCRIPTION	CHECK#	AMOUNT
01-000551	FIRST UNITED BANK & TRU					
		I-08/2016-SER 2009A	210-000-101.06-04	2009A INT. A SERIES 2009A INTEREST	164710	16,687.50
		I-08/2016-SER 2009A	210-000-101.06-03	2009A PRIN. SERIES 2009A PRINCIPAL	164710	20,000.00
		I-08/2016-SER 2009B	210-000-101.06-10	2009B INT. AC DCUA SALES/TAX REV 2009B INT	164711	5,755.37
		I-08/2016-SER 2009B	210-000-101.06-09	2009B PRIN. A DCUA SALES/TAX REV 2009B PRIN	164711	6,666.67
01-002229	FIRST UNITED BANK & TRU					
		I-08/2016-400695201	210-000-101.06-13	2010 DCUA INT INT UTILITY SYS SALES TAX REV	164714	16,100.64
		I-08/2016-400695201	210-000-101.06-12	2010 DCUA PRI PRINCIPAL	164714	20,833.33
		I-08/2016-DCUA 2013	210-000-101.24-03	2013 PRIN. AC 2013 DCUA USSTR NOTE PRINCIPAL	164718	38,333.33
		I-08/2016-DCUA 2013	210-000-101.24-04	2013 INT. ACT 2013 DCUA USSTR NOTE INTEREST	164718	4,532.00
		I-08/2016-DCUA2012A	210-000-101.23-04	2012A INT. AC DCUA 2012A NOTE INTEREST	164719	10,026.67
		I-08/2016-DCUA2012A	210-000-101.23-03	2012A PRIN. A DCUA 2012A NOTE PRINCIPAL	164719	74,166.67

DEPARTMENT NON-DEPARTMENTAL TOTAL: 213,102.18

PACKET: 08171 AP CLAIMS 09/14/2016
VENDOR SET: 01
FUND : 210 U A BONDS SINKING FUND
DEPARTMENT: 046 DCUA 2007 MISC NOTE BANK: 601
BUDGET TO USE: CB-CURRENT BUDGET

VENDOR	NAME	ITEM #	G/L ACCOUNT NAME	DESCRIPTION	CHECK#	AMOUNT
01-000551	FIRST UNITED BANK & TRU					
		I-08/2016-USSTRN07	210-046-528.90-95	INTEREST EXPE 2007 SALES TAX REVENUE INT	164713	13,806.75
		I-08/2016-USSTRN07	210-046-528.90-96	PRINCIPAL PYM 2007 SALES TAX REVENUE PRIN	164713	21,666.67
				DEPARTMENT 046 DCUA 2007 MISC NOTE TOTAL:		35,473.42
				FUND 210 U A BONDS SINKING FUND TOTAL:		248,575.60

PACKET: 08171 AP CLAIMS 09/14/2016
VENDOR SET: 01
FUND : 215 D.C.F.A. REVENUE FUND
DEPARTMENT: 078 GEN. GOVT. & DEBT SERVICE BANK: 601
BUDGET TO USE: CB-CURRENT BUDGET

VENDOR	NAME	ITEM #	G/L ACCOUNT NAME	DESCRIPTION	CHECK#	AMOUNT
01-000944	CRAWFORD & ASSOCIATES P					
		I-10030	215-078-528.20-21	PRORATED AUDI AUDIT PREPARATION	164678	17.98
		I-9979	215-078-528.20-21	PRORATED AUDI AUDIT PREPARATION	164678	35.75
01-003190	P.L. PAT PHELPS					
		I-1608	215-078-528.20-05	LEGAL FEES DCFA LEGAL SERVICES	164803	70.00
				DEPARTMENT 078 GEN. GOVT. & DEBT SERVICETOTAL:		123.73
				FUND 215 D.C.F.A. REVENUE FUND TOTAL:		123.73

PACKET: 08171 AP CLAIMS 09/14/2016
VENDOR SET: 01
FUND : 250 C. D. B. G.
DEPARTMENT: 131 CDBG-ED 16246 CCLUB RD BANK: 601
BUDGET TO USE: CB-CURRENT BUDGET

VENDOR	NAME	ITEM #	G/L ACCOUNT NAME	DESCRIPTION	CHECK#	AMOUNT
01-002285	OWNER-OPERATORS, INC.					
		I-29565	250-131-596.60-01	14CDBG-ED1624 BASEROCK	164798	5,987.00
		I-29585	250-131-596.60-01	14CDBG-ED1624 BASEROCK	164798	1,753.86
01-005728	ROCKING O CONSTRUCTION,					
		I-APP#2 PROJDU-15-01	250-131-596.60-01	14CDBG-ED1624 CURB & GUTTER	164816	60,713.80
				DEPARTMENT 131 CDBG-ED 16246 CCLUB RD	TOTAL:	68,454.66
				FUND 250 C. D. B. G.	TOTAL:	68,454.66

PACKET: 08171 AP CLAIMS 09/14/2016
VENDOR SET: 01
FUND : 315 R.L.WILLIAMS LIBRARY FUND
DEPARTMENT: 015 R.L.WILLIAMS LIBRARY BANK: 601
BUDGET TO USE: CB-CURRENT BUDGET

VENDOR	NAME	ITEM #	G/L ACCOUNT NAME	DESCRIPTION	CHECK#	AMOUNT
01-000071	MICROMARKETING LLC					
		I-634442	315-015-571.50-56	BOOKS, TAPES, 2016 BOARD BOOK LIST	164767	115.14
		I-634869	315-015-571.50-56	BOOKS, TAPES, 2016 BOARD BOOK LIST	164767	69.27
01-001610	AMAZON.COM CREDIT PLAN					
		I-079490067179	315-015-571.50-56	BOOKS, TAPES, SUMMER READING MISC. TITLES	164635	14.99
				DEPARTMENT 015 R.L.WILLIAMS LIBRARY TOTAL:		199.40
				FUND 315 R.L.WILLIAMS LIBRARY FUNDTOTAL:		199.40

PACKET: 08171 AP CLAIMS 09/14/2016
VENDOR SET: 01
FUND : 405 DURANT UTILITIES AUTH.
DEPARTMENT: N/A NON-DEPARTMENTAL BANK: 601
BUDGET TO USE: CB-CURRENT BUDGET

VENDOR	NAME	ITEM #	G/L ACCOUNT NAME	DESCRIPTION	CHECK#	AMOUNT
01-005839	KURT WALKER					
		I-01454050	405-000-361.24-00	TAP FEES: WAT TAP FEE REFUND	164868	1,112.75
				DEPARTMENT NON-DEPARTMENTAL	TOTAL:	1,112.75

PACKET: 08171 AP CLAIMS 09/14/2016
VENDOR SET: 01
FUND : 405 DURANT UTILITIES AUTH.
DEPARTMENT: 024 PUBLIC WORKS ADMIN. BANK: 601
BUDGET TO USE: CB-CURRENT BUDGET

VENDOR	NAME	ITEM #	G/L ACCOUNT NAME	DESCRIPTION	CHECK#	AMOUNT
01-000540	AT&T					
		I-08/2016-7608 1	405-024-565.30-31	PHONE & TELEC PUBLIC WORKS	164637	28.50
01-003100	FUELMAN OF SOUTHERN OKL					
		I-08/2016-BG159577	405-024-565.50-52	FUEL PUBLIC WORKS	000000	0.00
01-004143	TOUCHTONE COMMUNICATION					
		I-08/2016-809247222	405-024-565.30-31	PHONE & TELEC LONG DISTANCE CHGS PUB WKS	164851	0.00
01-004980	DOUGLASS DISTRIBUTING					
		I-08/2016-DURCIT	405-024-565.50-52	FUEL PUBLIC WORKS ADMIN	164689	9.38
		I-08/2016A-DURCIT	405-024-565.50-52	FUEL PUBLIC WORKS ADMIN	164689	11.16
		I-08/2016B-DURCIT	405-024-565.50-52	FUEL PUBLIC WORKS ADMIN	164689	11.38
		I-08/2016C-DURCIT	405-024-565.50-52	FUEL PUBLIC WORKS ADMIN	164689	8.97
		I-08/2016D-DURCIT	405-024-565.50-52	FUEL PUBLIC WORKS ADMIN	164689	12.25
				DEPARTMENT 024 PUBLIC WORKS ADMIN. TOTAL:		81.64

PACKET: 08171 AP CLAIMS 09/14/2016
VENDOR SET: 01
FUND : 405 DURANT UTILITIES AUTH.
DEPARTMENT: 025 UTILITY BILLING BANK: 601
BUDGET TO USE: CB-CURRENT BUDGET

VENDOR NAME	ITEM #	G/L ACCOUNT NAME	DESCRIPTION	CHECK#	AMOUNT
01-000484 PRICE'S PRINTING					
	I-52336	405-025-550.30-37	PRINTING SERV BUSINESS CARDS	164807	87.00
01-005598 DATAPROSE, LLC					
	I-DP1602053	405-025-550.30-33	UTILITY BILLI POSTAGE USED	164683	2,063.94
	I-DP1602053	405-025-550.30-33	UTILITY BILLI BILL PACKAGE	164683	1,130.65
			DEPARTMENT 025 UTILITY BILLING	TOTAL:	3,281.59

PACKET: 08171 AP CLAIMS 09/14/2016
VENDOR SET: 01
FUND : 405 DURANT UTILITIES AUTH.
DEPARTMENT: 026 WATER/SEWER LINE MAINT. BANK: 601
BUDGET TO USE: CB-CURRENT BUDGET

VENDOR NAME	ITEM #	G/L ACCOUNT NAME	DESCRIPTION	CHECK#	AMOUNT
01-000164 DURANT TRUE VALUE LUMBE					
	I-590893	405-026-551.50-58	BUILDING AND BLANKET PO	164695	43.97
01-000309 US CELLULAR					
	I-0150154083	405-026-551.30-31	PHONE & TELEC M/O ON CALL#580-775-2973& 3180	164856	55.70
01-000328 JIMMIE'S AUTO SUPPLY LL					
	I-174534	405-026-551.50-63	VEHICLE MAINT BLANKET PO-------VEHICLE MAINT	164746	90.49
01-000525 THE SIGN DEPOT,LLC					
	I-16231	405-026-551.50-63	VEHICLE MAINT CITY DECALS FOR ALL DEPTS.	164845	206.01
01-000540 AT&T					
	I-08/2016-7608 1	405-026-551.30-31	PHONE & TELEC W/S LINE MAINTENANCE	164637	470.77
01-000548 S & H ELECTRIC MOTOR SE					
	I-08.26.16	405-026-551.50-70	LIFT STATIONS ARKANSAS LIFT STATION REPAIR	164820	1,538.17
01-000624 CINTAS CORP					
	I-618750019	405-026-551.50-54	UNIFORMS BLANKET PO	164666	95.13
	I-618750703	405-026-551.50-54	UNIFORMS BLANKET PO	164666	90.05
	I-618751386	405-026-551.50-54	UNIFORMS BLANKET PO	164666	88.41
	I-618752067	405-026-551.50-54	UNIFORMS BLANKET PO	164666	88.41
01-002242 JP MORGAN CHASE - BANK					
	I-0253-9452-0816	405-026-551.50-51	OFFICE SUPPLI BLANKET PO	000000	82.00
	I-2523-6708-0816	405-026-551.70-72	TRAINING AND RANDY CANTRELL	000000	62.00
	I-2523-6708-0816	405-026-551.70-72	TRAINING AND JOHN THOMAS ARGO	000000	62.00
	I-2523-6708-0816	405-026-551.70-72	TRAINING AND JARROD JOLLY	000000	62.00
	I-2523-6708-0816	405-026-551.70-72	TRAINING AND CHRISTOPHER SPROUSE	000000	62.00
	I-2523-6708-0816	405-026-551.70-72	TRAINING AND TODD MILLER	000000	62.00
	I-2523-6708-0816	405-026-551.70-72	TRAINING AND ELLIOTT DOWNS	000000	62.00
	I-2523-6708-0816	405-026-551.70-72	TRAINING AND MICHAEL ROBBIE MEWSZEL	000000	62.00
	I-2523-6708-0816	405-026-551.70-72	TRAINING AND GARY MCBRIDE	000000	62.00
	I-2523-6708-0816	405-026-551.70-72	TRAINING AND GARY MCBRIDE	000000	62.00
	I-2523-6708-0816	405-026-551.70-72	TRAINING AND TODD MILLER	000000	62.00
	I-2523-6708-0816	405-026-551.70-72	TRAINING AND ELLIOTT DOWNS	000000	62.00
	I-2523-6708-0816	405-026-551.70-72	TRAINING AND JOHN THOMAS ARGO	000000	62.00
	I-2523-6708-0816	405-026-551.70-72	TRAINING AND CHRISTOPHER SPROUSE	000000	62.00
	I-2523-6708-0816	405-026-551.70-72	TRAINING AND JARROD JOLLY	000000	62.00
	I-2523-6708-0816	405-026-551.70-72	TRAINING AND MICHAEL ROBBIE MEWSZEL	000000	62.00
01-003100 FUELMAN OF SOUTHERN OKL					
	I-08/2016-BG159577	405-026-551.50-52	FUEL WATER/SEWER-FUEL	000000	0.00
01-004143 TOUCHTONE COMMUNICATION					
	I-08/2016-809247222	405-026-551.30-31	PHONE & TELEC LONG DISTANCE WTR/SWR LN	164851	0.00
01-004552 HD SUPPLY WATERWORKS					

PACKET: 08171 AP CLAIMS 09/14/2016
VENDOR SET: 01
FUND : 405 DURANT UTILITIES AUTH.
DEPARTMENT: 026 WATER/SEWER LINE MAINT. BANK: 601
BUDGET TO USE: CB-CURRENT BUDGET

VENDOR NAME	ITEM #	G/L ACCOUNT NAME	DESCRIPTION	CHECK#	AMOUNT
01-004552 HD SUPPLY WATERWORKS continued					
	I-F836056	405-026-551.50-76	WATER MAIN MA STOCK PARTS	164735	149.34
	I-F904799	405-026-551.50-76	WATER MAIN MA STOCK PARTS	164735	1,803.56
	I-F938461	405-026-551.50-76	WATER MAIN MA STOCK PARTS	164735	190.00
	I-F954467	405-026-551.50-79	METER MAINT & 4" HP METER FOR 2501 W MAIN	164735	782.00
	I-G979397	405-026-551.50-79	METER MAINT & 4" HP METER FOR 2501 W MAIN	164735	400.53
01-004980 DOUGLASS DISTRIBUTING					
	I-08/2016-DURCIT	405-026-551.50-52	FUEL M/O	164689	310.42
	I-08/2016A-DURCIT	405-026-551.50-52	FUEL M/O	164689	369.26
	I-08/2016B-DURCIT	405-026-551.50-52	FUEL M/O	164689	376.56
	I-08/2016C-DURCIT	405-026-551.50-52	FUEL M/O	164689	296.80
	I-08/2016D-DURCIT	405-026-551.50-52	FUEL M/O	164689	405.18
01-005430 VERIZON WIRELESS					
	I-08/2016-581700003	405-026-551.30-31	PHONE & TELEC M/O DATA LIFT STATIONS	164860	538.95

DEPARTMENT 026 WATER/SEWER LINE MAINT. TOTAL: 9,401.71

PACKET: 08171 AP CLAIMS 09/14/2016
VENDOR SET: 01
FUND : 405 DURANT UTILITIES AUTH.
DEPARTMENT: 027 WATER TREATMENT PLANT BANK: 601
BUDGET TO USE: CB-CURRENT BUDGET

VENDOR NAME	ITEM #	G/L ACCOUNT NAME	DESCRIPTION	CHECK#	AMOUNT
01-000057 BRYAN AGRI PRODUCTS					
	I-594771	405-027-552.50-71	LAKE DURANT R DOZER WORK	164649	243.00
01-000309 US CELLULAR					
	I-0150154083	405-027-552.30-31	PHONE & TELEC WTP ON CALL 580-774-4774	164856	27.85
01-000450 OKLAHOMA GAS AND ELECTR					
	I-08/2016- 35948058	405-027-552.30-33	UTILITIES WTP	164776	30,496.52
	I-08/2016-129166792	405-027-552.30-33	UTILITIES ELECTRIC SERVICE - WTP	164776	0.00
01-000525 THE SIGN DEPOT,LLC					
	I-16231	405-027-552.50-63	VEHICLE MAINT CITY DECALS FOR ALL DEPTS.	164845	206.01
01-000540 AT&T					
	I-08/2016-7608 1	405-027-552.30-31	PHONE & TELEC WTP	164637	11.40
01-000613 SHIPMAN COMMUNICATIONS					
	I-60041	405-027-552.50-58	BUILDING AND WATER TOWER LIGHT BULBS	164823	185.00
01-000624 CINTAS CORP					
	I-618750012	405-027-552.50-54	UNIFORMS BLANKET PO	164666	62.83
	I-618750696	405-027-552.50-54	UNIFORMS BLANKET PO	164666	76.72
	I-618751379	405-027-552.50-54	UNIFORMS BLANKET PO	164666	62.83
	I-618752060	405-027-552.50-54	UNIFORMS BLANKET PO	164666	62.83
01-000650 ENVIRONMENTAL RESOURCE					
	I-800507	405-027-552.50-53	CHEMICALS, DR WS 241--WATER STUDY	164699	429.46
01-000819 SOUTHWEST CHEMICAL					
	I-105251	405-027-552.50-53	CHEMICALS, DR CHEMICALS	164832	3,104.63
	I-105324	405-027-552.50-53	CHEMICALS, DR CHEMICALS	164832	3,074.33
01-000824 HACH COMPANY					
	I-10069546	405-027-552.50-53	CHEMICALS, DR LAB CHEMICALS	164731	1,567.53
01-001580 LYLES ELECTRIC					
	I-2581	405-027-552.50-58	BUILDING AND HIGH SERVICE PUMP STATION-VFD	164761	4,119.64
01-001587 A*B*C OCCUPATIONAL SAFE					
	I-49013	405-027-552.70-74	SAFETY EQUIPM FIRE EXTINGUISHERS	164633	120.00
01-002242 JP MORGAN CHASE - BANK					
	I-0264-7511-0816	405-027-552.50-61	MINOR TOOLS A A/C FILTERS, DUST MASK	000000	197.36
	I-0264-7511-0816	405-027-552.70-72	TRAINING AND ZACH OWENS DEQ WATER TEST	000000	62.00
	I-0264-7511-0816	405-027-552.50-58	BUILDING AND A/C UNIT	000000	619.00
	I-0264-7511-0816	405-027-552.50-62	JANITORAL SUP BLANKET PO--JANITORIAL	000000	46.56
	I-0264-7511-0816	405-027-552.50-51	OFFICE SUPPLI BLANKET PO--OFFICE SUPPLIES	000000	75.00
01-002347 WHOLESALE EQUIPMENT					

PACKET: 08171 AP CLAIMS 09/14/2016
VENDOR SET: 01
FUND : 405 DURANT UTILITIES AUTH.
DEPARTMENT: 027 WATER TREATMENT PLANT BANK: 601
BUDGET TO USE: CB-CURRENT BUDGET

VENDOR	NAME	ITEM #	G/L ACCOUNT NAME	DESCRIPTION	CHECK#	AMOUNT
01-002347	WHOLESALE EQUIPMENT continued					
		I-047560	405-027-552.50-58	BUILDING AND OXYGEN CYLINDER LEASES	164871	200.00
01-003100	FUELMAN OF SOUTHERN OKL					
		I-08/2016-BG159577	405-027-552.50-52	FUEL FUEL-WTP	000000	0.00
01-004143	TOUCHTONE COMMUNICATION					
		I-08/2016-809247222	405-027-552.30-31	PHONE & TELEC LONG DISTANCE CHGS WTP	164851	0.00
01-004736	CONTROL CONCEPTS, INC					
		I-15010	405-027-552.50-58	BUILDING AND SERVICE CALL	164676	746.50
01-004980	DOUGLASS DISTRIBUTING					
		I-08/2016-DURCIT	405-027-552.50-52	FUEL WTP	164689	35.77
		I-08/2016A-DURCIT	405-027-552.50-52	FUEL WTP	164689	42.55
		I-08/2016B-DURCIT	405-027-552.50-52	FUEL WTP	164689	43.39
		I-08/2016C-DURCIT	405-027-552.50-52	FUEL WTP	164689	34.20
		I-08/2016D-DURCIT	405-027-552.50-52	FUEL WTP	164689	46.69
01-005230	ENVIRONMENTAL RESOURCE					
		I-33814	405-027-552.50-53	CHEMICALS, DR LAB TESTING	164700	1,200.00
		I-34154	405-027-552.50-53	CHEMICALS, DR LAB TESTING	164700	80.00
		I-34236	405-027-552.50-53	CHEMICALS, DR LAB TESTING	164700	25.00
01-005440	BRENNTAG SOUTHWEST, INC					
		I-BSW756868	405-027-552.50-53	CHEMICALS, DR CHEMICALS	164645	3,608.88
01-005565	EVOQUA WATER TECHNOLOGI					
		I-902733076	405-027-552.50-53	CHEMICALS, DR CHLORINE DIOXIDE	164704	550.00
01-005574	ACCURATE ENVIRONMENTAL					
		I-6G12146	405-027-552.50-53	CHEMICALS, DR LAB TESTING FOR CRYPTO	164634	10.00
		I-6H09184	405-027-552.50-53	CHEMICALS, DR LAB TESTING FOR CRYPTO	164634	430.00
01-005838	ZACH OWEN					
		I-08.08.16- 08.09.16	405-027-552.70-72	TRAINING AND TRAVEL REIMBURSEMENT	164797	142.78

DEPARTMENT 027 WATER TREATMENT PLANT TOTAL: 52,046.26

PACKET: 08171 AP CLAIMS 09/14/2016
VENDOR SET: 01
FUND : 405 DURANT UTILITIES AUTH.
DEPARTMENT: 028 WWTP BANK: 601
BUDGET TO USE: CB-CURRENT BUDGET

VENDOR NAME	ITEM #	G/L ACCOUNT NAME	DESCRIPTION	CHECK#	AMOUNT
01-000164 DURANT TRUE VALUE LUMBE					
	C- 591260	405-028-553.50-69	OTHER EQUIP P DURANT TRUE VALUE LUMBER	164695	9.96-
	I-591232	405-028-553.50-61	MINOR TOOLS A BLANKET PO	164695	119.97
	I-591233	405-028-553.50-69	OTHER EQUIP P BLANKET PO	164695	18.20
	I-591260	405-028-553.50-69	OTHER EQUIP P BLANKET PO	164695	16.98
	I-591457	405-028-553.50-69	OTHER EQUIP P BLANKET PO	164695	61.44
01-000309 US CELLULAR					
	I-0150014124	405-028-553.30-31	PHONE & TELEC WWTP INTERNET CARD	164856	52.07
	I-0150154083	405-028-553.30-31	PHONE & TELEC WWTP ON CALL 580-775-4812	164856	45.85
01-000328 JIMMIE'S AUTO SUPPLY LL					
	I-173818	405-028-553.50-69	OTHER EQUIP P SEAL FOR PUMP	164746	182.18
01-000381 OKLAHOMA NATURAL GAS					
	I-AUG 2016	405-028-553.30-33	UTILITIES WWTP 211477529 2126160 64	164792	210.84
01-000450 OKLAHOMA GAS AND ELECTR					
	I-08/2016- 35948058	405-028-553.30-33	UTILITIES WWTP	164776	11,492.78
	I-08/2016-35948044	405-028-553.30-33	UTILITIES WWTP-1124 DAVIS	164776	328.10
01-000500 RAYMOND'S AUTO SUPPLY I					
	I-433041	405-028-553.50-69	OTHER EQUIP P BLANKET	164809	57.39
01-000525 THE SIGN DEPOT,LLC					
	I-16231	405-028-553.50-63	VEHICLE MAINT CITY DECALS FOR ALL DEPTS.	164845	206.01
01-000540 AT&T					
	I-08/2016-7608 1	405-028-553.30-31	PHONE & TELEC WWTP	164637	62.00
01-000624 CINTAS CORP					
	I-618750020	405-028-553.50-54	UNIFORMS BLANKET PO	164666	78.11
	I-618750704	405-028-553.50-54	UNIFORMS BLANKET PO	164666	64.22
	I-618751387	405-028-553.50-54	UNIFORMS BLANKET PO	164666	64.22
	I-618752068	405-028-553.50-54	UNIFORMS BLANKET PO	164666	64.22
01-000650 ENVIRONMENTAL RESOURCE					
	I-801752	405-028-553.50-53	CHEMICALS, DR STATE CORRECTIVE ACTION TESTS	164699	243.22
01-001132 NORTH CENTRAL LABORATOR					
	I-377350	405-028-553.50-53	CHEMICALS, DR LAB SUPPLIES	164771	1,555.42
01-001434 SCHAEFFER MFG. CO.					
	I-AFH42360-INV1	405-028-553.50-69	OTHER EQUIP P WWTP OIL	164821	234.52
01-001671 SOUTHEASTERN ELECTRIC					
	I-AUG 2016	405-028-553.30-33	UTILITIES WWTP 3P.SEWERLIFT 16370-014	164829	33.38
01-002242 JP MORGAN CHASE - BANK					

PACKET: 08171 AP CLAIMS 09/14/2016
VENDOR SET: 01
FUND : 405 DURANT UTILITIES AUTH.
DEPARTMENT: 028 WWTP BANK: 601
BUDGET TO USE: CB-CURRENT BUDGET

VENDOR NAME	ITEM #	G/L ACCOUNT NAME	DESCRIPTION	CHECK#	AMOUNT
01-002242 JP MORGAN CHASE - BANK continued					
	I-2275-0941-0816	405-028-553.70-72	TRAINING AND JESSE BURK	000000	62.00
	I-2275-0941-0816	405-028-553.70-72	TRAINING AND REGISTRATION	000000	150.00
	I-2275-0941-0816	405-028-553.50-69	OTHER EQUIP P OIL SITE GLASSES FOR SBR BLOWE	000000	149.87
	I-2275-0941-0816	405-028-553.50-69	OTHER EQUIP P PLC PARTS	000000	573.37
01-002840 THE UPS STORE - #4911					
	I-8989	405-028-553.30-32	FREIGHT AND P BLANKET PO------UPS	164855	29.21
01-003100 FUELMAN OF SOUTHERN OKL					
	I-08/2016-BG159577	405-028-553.50-52	FUEL FUEL-WWTP	000000	0.00
01-003452 ESBENSHADE INC					
	I-319290	405-028-553.30-36	SLUDGE DISPOS SLUDGE DISPOSAL	164703	1,125.00
	I-319291	405-028-553.30-36	SLUDGE DISPOS SLUDGE DISPOSAL	164703	1,125.00
	I-319292	405-028-553.30-36	SLUDGE DISPOS SLUDGE DISPOSAL	164703	1,125.00
	I-319293	405-028-553.30-36	SLUDGE DISPOS SLUDGE DISPOSAL	164703	1,125.00
	I-319294	405-028-553.30-36	SLUDGE DISPOS SLUDGE DISPOSAL	164703	1,125.00
01-003482 DASH MEDICAL GLOVES					
	I-INV1010276	405-028-553.50-53	CHEMICALS, DR LATEX GLOVES	164682	142.80
01-004143 TOUCHTONE COMMUNICATION					
	I-08/2016-809247222	405-028-553.30-31	PHONE & TELEC LONG DISTANCE CHGS WWTP	164851	0.00
01-004174 CARL, CARY E.					
	I-08.01.16- 08.04.16	405-028-553.70-72	TRAINING AND PER DIEM & TRAVEL EXPENSE	164653	224.82
01-004203 MCCRAW'S OIL & PROPANE					
	I-20687	405-028-553.50-52	FUEL GAS	164765	12.52
01-004980 DOUGLASS DISTRIBUTING					
	I-08/2016-DURCIT	405-028-553.50-52	FUEL WWTP	164689	28.05
	I-08/2016A-DURCIT	405-028-553.50-52	FUEL WWTP	164689	33.36
	I-08/2016B-DURCIT	405-028-553.50-52	FUEL WWTP	164689	34.02
	I-08/2016C-DURCIT	405-028-553.50-52	FUEL WWTP	164689	26.82
	I-08/2016D-DURCIT	405-028-553.50-52	FUEL WWTP	164689	36.61
01-005781 COGENT, INC. DBA AUTOMA					
	I-5373338	405-028-553.50-69	OTHER EQUIP P MAIN LIFT STATION PUMP	164673	15,398.00
			DEPARTMENT 028 WWTP	TOTAL:	37,707.61

PACKET: 08171 AP CLAIMS 09/14/2016
VENDOR SET: 01
FUND : 405 DURANT UTILITIES AUTH.
DEPARTMENT: 029 COLLECTION - SOLID WASTE BANK: 601
BUDGET TO USE: CB-CURRENT BUDGET

VENDOR NAME	ITEM #	G/L ACCOUNT NAME	DESCRIPTION	CHECK#	AMOUNT
01-000164 DURANT TRUE VALUE LUMBE					
	I-591270	405-029-554.50-58	BUILDING AND SWC BLANKET DUANT LUMBER	164695	29.94
01-000328 JIMMIE'S AUTO SUPPLY LL					
	I-170698	405-029-554.50-63	VEHICLE MAINT BLANKET PO FOR GARAGE	164746	70.76
	I-170968	405-029-554.50-63	VEHICLE MAINT BLANKET PO FOR GARAGE	164746	70.53
	I-171176	405-029-554.50-61	MINOR TOOLS A SWC BLANKET JIMMIE'S	164746	27.98
	I-172455	405-029-554.50-63	VEHICLE MAINT BLANKET PO FOR GARAGE	164746	105.12
	I-173046	405-029-554.50-63	VEHICLE MAINT BLANKET PO FOR GARAGE	164746	20.32
	I-173461	405-029-554.50-63	VEHICLE MAINT BLANKET PO FOR GARAGE	164746	11.85
	I-173545	405-029-554.50-63	VEHICLE MAINT BLANKET PO FOR GARAGE	164746	72.44
	I-173977	405-029-554.50-63	VEHICLE MAINT BLANKET PO FOR GARAGE	164746	102.61
	I-174495	405-029-554.50-63	VEHICLE MAINT BLANKET PO FOR GARAGE	164746	32.38
	I-174965	405-029-554.50-63	VEHICLE MAINT BLANKET PO FOR GARAGE	164746	10.79
01-000525 THE SIGN DEPOT,LLC					
	I-16231	405-029-554.50-63	VEHICLE MAINT CITY DECALS FOR ALL DEPTS.	164845	206.01
01-000540 AT&T					
	I-08/2016-7608 1	405-029-554.30-31	PHONE & TELEC SANITATION	164637	17.10
01-000579 CASTEEL'S TIRE BARN INC					
	I-1-GS155956	405-029-554.50-63	VEHICLE MAINT 2-TIRES #69	164657	244.92
01-000624 CINTAS CORP					
	I-618750014	405-029-554.50-54	UNIFORMS SWC BLANKET FOR UNIFORMS	164666	171.00
	I-618750698	405-029-554.50-54	UNIFORMS SWC BLANKET FOR UNIFORMS	164666	152.89
	I-618751381	405-029-554.50-54	UNIFORMS SWC BLANKET FOR UNIFORMS	164666	151.78
	I-618752062	405-029-554.50-54	UNIFORMS SWC BLANKET FOR UNIFORMS	164666	145.33
01-001420 UNITED ENGINES LLC					
	I-2083119	405-029-554.50-63	VEHICLE MAINT GRABER BELTS & SENSOR #14	164854	176.62
01-002010 DAVIS FLEET PARTS					
	I-621836	405-029-554.50-63	VEHICLE MAINT BLANKET PO	164684	100.06
01-002894 STERICYCLE INC					
	I-4006506499	405-029-554.70-73	SHARPS DISPOS SHARPS CONTAINERS	164833	456.32
01-003075 TOTAL TRUCK & TRAILER,					
	I-20167373	405-029-554.50-63	VEHICLE MAINT CABLES #20	164850	220.00
01-003100 FUELMAN OF SOUTHERN OKL					
	I-08/2016-BG159577	405-029-554.50-52	FUEL SOLID WASTE COLLECTION-FUEL	000000	48.68
01-003102 ROLL OFFS USA OF AMERIC					
	I-0038520-IN	405-029-554.50-82	COMPACTORS REPAIR HOSPITAL COMPACTOR	164817	218.05
	I-0038568-IN	405-029-554.50-82	COMPACTORS REPAIR DHS COMPACTOR	164817	50.08
	I-0038569-IN	405-029-554.50-82	COMPACTORS REPAIR DHS COMPACTOR	164817	583.40

PACKET: 08171 AP CLAIMS 09/14/2016
VENDOR SET: 01
FUND : 405 DURANT UTILITIES AUTH.
DEPARTMENT: 029 COLLECTION - SOLID WASTE BANK: 601
BUDGET TO USE: CB-CURRENT BUDGET

VENDOR NAME	ITEM #	G/L ACCOUNT NAME	DESCRIPTION		CHECK#	AMOUNT
01-003490 WILLIAMS REFUSE EQUIPME						
	I-4539	405-029-554.50-83	POLYCARTS	POLYCART LIDS	164872	1,247.50
	I-4540	405-029-554.50-83	POLYCARTS	POLYCART WHEELS & AXLES	164872	1,502.19
01-004143 TOUCHTONE COMMUNICATION						
	I-08/2016-809247222	405-029-554.30-31	PHONE & TELEC	LONG DISTANCE SANITATION	164851	0.00
01-004606 CARS AND TIRES, INC						
	I-12396	405-029-554.50-63	VEHICLE MAINT	FRONT END ALIGNMENT SWC#69	164654	60.00
01-004980 DOUGLASS DISTRIBUTING						
	I-08/2016-DURCIT	405-029-554.50-52	FUEL	SW COLLECTION	164689	968.65
	I-08/2016A-DURCIT	405-029-554.50-52	FUEL	SW COLLECTION	164689	1,152.24
	I-08/2016B-DURCIT	405-029-554.50-52	FUEL	SW COLLECTION	164689	1,175.05
	I-08/2016C-DURCIT	405-029-554.50-52	FUEL	SW COLLECTION	164689	926.16
	I-08/2016D-DURCIT	405-029-554.50-52	FUEL	SW COLLECTION	164689	1,264.36
01-005070 G & K PRINTING COMPANY						
	I-08.10.16	405-029-554.50-53	PUBLICATIONS	300 DOOR HANGERS	164723	154.30
01-005139 TEXOMA MFG. LLC						
	I-7316	405-029-554.50-63	VEHICLE MAINT	INSTALLING ARM HOOK #68	164841	315.00
01-005168 CASTEEL'S TIRE (CALERA)						
	I-1-52056	405-029-554.50-63	VEHICLE MAINT	4-TIRES #6	164656	1,314.72
01-005706 SOUTHEASTERN ICE						
	I-0153549	405-029-554.50-58	BUILDING AND	ICE	164831	53.00
01-005837 PLATINUM MANUFACTURING						
	I-2543	405-029-554.50-81	ROLL-OFF BINS	LABOR ON ROLLOFFS	164805	1,173.75
	I-2544	405-029-554.50-79	DUMPSTERS	LABOR ON DUMPSTERS	164805	217.50

DEPARTMENT 029 COLLECTION - SOLID WASTE TOTAL: 15,021.38

PACKET: 08171 AP CLAIMS 09/14/2016
VENDOR SET: 01
FUND : 405 DURANT UTILITIES AUTH.
DEPARTMENT: 030 UTILITY GENERAL ADMIN. BANK: 601
BUDGET TO USE: CB-CURRENT BUDGET

VENDOR NAME	ITEM #	G/L ACCOUNT NAME	DESCRIPTION	CHECK#	AMOUNT
01-000152 DURANT DAILY DEMOCRAT					
	I-301887642	405-030-555.30-38	ADVERTISING- BOW HUNTING DEER LEASE AD	164692	29.40
01-000493 OK DEPT OF ENVIRONMENTA					
	I-30354445	405-030-555.70-97	WATER & WASTE RETENTION LAGOON ANNUAL FEE	164785	651.96
01-000673 OTC					
	I-298037	405-030-555.70-79	CDL RENEWAL F BLANKET PO---EMP. CDL RENEWALS	164794	51.50
	I-947698	405-030-555.70-79	CDL RENEWAL F BLANKET PO---EMP. CDL RENEWALS	164794	28.00
01-000944 CRAWFORD & ASSOCIATES P					
	I-10030	405-030-555.20-21	PRORATED AUDI AUDIT PREPARATION	164678	110.79
	I-9979	405-030-555.20-21	PRORATED AUDI AUDIT PREPARATION	164678	220.25
01-001951 BETTY ROBERTSON					
	I-89	405-030-555.30-48	JANITORIAL SE STREET & SW JANITORIAL SERVICE	164643	35.82

DEPARTMENT 030 UTILITY GENERAL ADMIN. TOTAL: 1,127.72

PACKET: 08171 AP CLAIMS 09/14/2016
VENDOR SET: 01
FUND : 405 DURANT UTILITIES AUTH.
DEPARTMENT: 031 "LAKE DURANT" BANK: 601
BUDGET TO USE: CB-CURRENT BUDGET

VENDOR	NAME	ITEM #	G/L ACCOUNT NAME		DESCRIPTION	CHECK#	AMOUNT
01-001671	SOUTHEASTERN ELECTRIC						
		I-AUG 2016	405-031-552.30-33	UTILITIES	LAKE GATE TRAILER 16370-003	164829	153.81
		I-AUG 2016	405-031-552.30-33	UTILITIES	LAKE 16370-004	164829	303.56
		I-AUG 2016	405-031-552.30-33	UTILITIES	LAKE PICNIC AREA 16370-006	164829	40.12
		I-AUG 2016	405-031-552.30-33	UTILITIES	LAKE CG WATER TOWER 16370-010	164829	133.96
		I-AUG 2016	405-031-552.30-33	UTILITIES	LAKE RV PADS 16370-012	164829	45.35
01-003100	FUELMAN OF SOUTHERN OKL						
		I-08/2016-BG159577	405-031-552.50-52	FUEL	FUEL-LAKE DURANT	000000	0.00
01-003189	BRYAN CO RWD #2						
		I-AUG 2016	405-031-552.30-33	UTILITIES	LAKE DURANT ACCT #1833	164648	64.15
		I-AUG 2016	405-031-552.30-33	UTILITIES	WARD ACCT #1834	164648	19.93
01-003402	MICHAEL WARD						
		I-117644	405-031-552.30-51	CONTRACT LABO	LAKE DURANT CONTRACT LABOR	164869	733.42
		I-117645	405-031-552.30-51	CONTRACT LABO	LAKE DURANT CONTRACT LABOR	164870	733.43
01-004980	DOUGLASS DISTRIBUTING						
		I-08/2016-DURCIT	405-031-552.50-52	FUEL	LAKE DURANT	164689	1.76
		I-08/2016A-DURCIT	405-031-552.50-52	FUEL	LAKE DURANT	164689	2.09
		I-08/2016B-DURCIT	405-031-552.50-52	FUEL	LAKE DURANT	164689	2.13
		I-08/2016C-DURCIT	405-031-552.50-52	FUEL	LAKE DURANT	164689	1.68
		I-08/2016D-DURCIT	405-031-552.50-52	FUEL	LAKE DURANT	164689	2.30

DEPARTMENT 031 "LAKE DURANT" TOTAL: 2,237.69

PACKET: 08171 AP CLAIMS 09/14/2016
VENDOR SET: 01
FUND : 405 DURANT UTILITIES AUTH.
DEPARTMENT: 049 DISPOSAL - SOLID WASTE BANK: 601
BUDGET TO USE: CB-CURRENT BUDGET

VENDOR NAME	ITEM #	G/L ACCOUNT NAME	DESCRIPTION	CHECK#	AMOUNT
01-000163 DURANT IRON & METAL INC					
	I-10511	405-049-554.50-58	BUILDING AND ANGLE IRON	164693	45.40
01-000328 JIMMIE'S AUTO SUPPLY LL					
	I-170948	405-049-554.70-59	LANDFILL EQUI BLANKET PO	164746	47.26
	I-171038	405-049-554.70-59	LANDFILL EQUI BLANKET PO	164746	40.80
	I-171128	405-049-554.70-59	LANDFILL EQUI BLANKET PO	164746	155.58
	I-171868	405-049-554.70-59	LANDFILL EQUI TRACTOR BATTERY #6610	164746	171.99
	I-171966	405-049-554.70-59	LANDFILL EQUI BLANKET PO	164746	209.22
	I-172075	405-049-554.70-59	LANDFILL EQUI BLANKET PO	164746	59.94
	I-172767	405-049-554.70-59	LANDFILL EQUI BLANKET PO	164746	8.90
	I-173151	405-049-554.70-59	LANDFILL EQUI BLANKET PO	164746	11.95
	I-173490	405-049-554.70-59	LANDFILL EQUI BLANKET PO	164746	10.45
	I-173498	405-049-554.70-59	LANDFILL EQUI BLANKET PO	164746	32.14
	I-173912	405-049-554.70-59	LANDFILL EQUI BLANKET PO	164746	69.59
	I-174902	405-049-554.70-59	LANDFILL EQUI BLANKET PO	164746	14.96
	I-175013	405-049-554.70-59	LANDFILL EQUI BLANKET PO	164746	490.83
01-000450 OKLAHOMA GAS AND ELECTR					
	I-08/2016- 35948058	405-049-554.30-33	UTILITIES LANDFILL	164776	0.00
01-000525 THE SIGN DEPOT,LLC					
	I-16231	405-049-554.70-59	LANDFILL EQUI CITY DECALS FOR ALL DEPTS.	164845	206.01
01-000540 AT&T					
	I-08/2016-7608 1	405-049-554.30-31	PHONE & TELEC LANDFILL	164637	0.00
01-000624 CINTAS CORP					
	I-618750021	405-049-554.50-54	UNIFORMS BLANKET PO	164666	82.58
	I-618750705	405-049-554.50-54	UNIFORMS BLANKET PO	164666	77.28
	I-618751388	405-049-554.50-54	UNIFORMS BLANKET PO	164666	79.71
	I-618752069	405-049-554.50-54	UNIFORMS BLANKET PO	164666	79.71
01-000729 SOONER SCALE INC					
	I-042964	405-049-554.50-58	BUILDING AND CALIBRATION OF SCALES	164826	295.00
01-002010 DAVIS FLEET PARTS					
	I-618777	405-049-554.70-59	LANDFILL EQUI BLANKET PO	164684	27.58
	I-618779	405-049-554.70-59	LANDFILL EQUI BLANKET PO	164684	42.88
	I-622271	405-049-554.70-59	LANDFILL EQUI BLANKET PO	164684	185.50
	I-622299	405-049-554.70-59	LANDFILL EQUI BLANKET PO	164684	49.34
	I-623167	405-049-554.70-59	LANDFILL EQUI AIR COMPRESSOR	164684	542.26
01-002242 JP MORGAN CHASE - BANK					
	I-2523-6708-0816	405-049-554.50-61	MINOR TOOLS A BLANKET PO	000000	144.85
	I-2523-6708-0816	405-049-554.50-51	OFFICE SUPPLI BLANKET PO	000000	105.57
01-002961 SOUTHERN OK REGIONAL DI					
	I-0000553382	405-049-554.30-44	SOLID WASTE D DISPOSAL FEES FY 2016/2017	164827	35,004.28

PACKET: 08171 AP CLAIMS 09/14/2016
VENDOR SET: 01
FUND : 405 DURANT UTILITIES AUTH.
DEPARTMENT: 049 DISPOSAL - SOLID WASTE BANK: 601
BUDGET TO USE: CB-CURRENT BUDGET

VENDOR NAME	ITEM #	G/L ACCOUNT NAME	DESCRIPTION	CHECK#	AMOUNT
01-003100 FUELMAN OF SOUTHERN OKL					
	I-08/2016-BG159577	405-049-554.50-52	FUEL FUEL-LANDFILL	000000	4,439.83
01-004143 TOUCHTONE COMMUNICATION					
	I-08/2016-809247222	405-049-554.30-31	PHONE & TELEC LONG DISTANCE LANDFILL	164851	0.00
01-004203 MCCRAW'S OIL & PROPANE					
	I-52519	405-049-554.50-65	OILS & LUBRIC 150 GALLONS OF HYDRAULIC OIL	164765	825.00
	I-53185	405-049-554.50-65	OILS & LUBRIC HYDRAULIC OIL	164765	275.00
	I-53244	405-049-554.50-65	OILS & LUBRIC HYDRAULIC OIL	164765	165.00
01-004439 CHEMSEARCH					
	I-2415988	405-049-554.50-65	OILS & LUBRIC YIELD LUBRICANT	164662	300.00
01-004980 DOUGLASS DISTRIBUTING					
	I-08/2016-DURCIT	405-049-554.50-52	FUEL LANDFILL/SW DISP	164689	68.48
	I-08/2016A-DURCIT	405-049-554.50-52	FUEL LANDFILL/SW DISP	164689	81.45
	I-08/2016B-DURCIT	405-049-554.50-52	FUEL LANDFILL/SW DISP	164689	83.07
	I-08/2016C-DURCIT	405-049-554.50-52	FUEL LANDFILL/SW DISP	164689	65.47
	I-08/2016D-DURCIT	405-049-554.50-52	FUEL LANDFILL/SW DISP	164689	89.38
01-005437 YELLOWHOUSE MACHINERY C					
	I-171595	405-049-554.70-59	LANDFILL EQUI LINK FOR #310 BACKHOE	164876	1,083.86

DEPARTMENT 049 DISPOSAL - SOLID WASTE TOTAL: 45,768.10

FUND 405 DURANT UTILITIES AUTH. TOTAL: 167,786.45

PACKET: 08171 AP CLAIMS 09/14/2016
VENDOR SET: 01
FUND : 500 MULTI-SPORTS COMPLEX
DEPARTMENT: 010 RECREATIONAL MARKETING BANK: 601
BUDGET TO USE: CB-CURRENT BUDGET

VENDOR NAME	ITEM #	G/L ACCOUNT NAME	DESCRIPTION	CHECK#	AMOUNT
01-000898 INDIAN NATION WHOLESALE					
	I-6559338	500-010-534.55-01	CONCESSION PR CONCESSION ITEMS	164744	749.10
01-000977 COCA-COLA BOTTLING CO					
	I-1201060811	500-010-534.10-18	CONCESSION SA FOR CONCESSION STAND	164672	238.46
	I-1211102708	500-010-534.55-01	CONCESSION PR CONCESSION ITEMS	164672	217.29
01-004099 US FOODS					
	I-3090263	500-010-534.55-01	CONCESSION PR CONCESSION ITEMS	164858	407.49
	I-3579933	500-010-534.55-03	CONCESSION MI ICE SCOOP	164858	2.99
			DEPARTMENT 010 RECREATIONAL MARKETING TOTAL:		1,615.33

PACKET: 08171 AP CLAIMS 09/14/2016
VENDOR SET: 01
FUND : 500 MULTI-SPORTS COMPLEX
DEPARTMENT: 011 DURANT MULTI-SPORTS CMPLX BANK: 601
BUDGET TO USE: CB-CURRENT BUDGET

VENDOR NAME	ITEM #	G/L ACCOUNT NAME	DESCRIPTION	CHECK#	AMOUNT
01-000007 DEALERS ELECTRICAL SUPP					
	I-4684414-00	500-011-535.50-58	BUILDING & GR BALLAST, BULB	164686	78.96
01-000164 DURANT TRUE VALUE LUMBE					
	I-591193	500-011-535.50-58	BUILDING & GR BLANKET PO	164695	4.19
	I-591230	500-011-535.50-58	BUILDING & GR BLANKET PO	164695	7.58
	I-591332	500-011-535.50-58	BUILDING & GR BLANKET PO	164695	4.99
01-000309 US CELLULAR					
	I-0150046634	500-011-535.30-31	PHONE & TELEC DMSC 580-775-2447 & 775-2390	164856	135.52
01-000328 JIMMIE'S AUTO SUPPLY LL					
	I-168552	500-011-535.50-61	MINOR TOOLS & BLANKET PO	164746	17.94
	I-173493	500-011-535.50-58	BUILDING & GR BLANKET PO	164746	180.98
	I-173533	500-011-535.50-58	BUILDING & GR BLANKET PO	164746	11.44
	I-174010	500-011-535.50-58	BUILDING & GR BLANKET PO	164746	35.13
	I-174089	500-011-535.50-58	BUILDING & GR BLANKET PO	164746	3.99
01-000445 BEMAC SUPPLY					
	I-S1943030.001	500-011-535.50-58	BUILDING & GR BLANKET PO------PLUMBING PARTS	164642	1.08
	I-S1943925.001	500-011-535.50-58	BUILDING & GR BLANKET PO------PLUMBING PARTS	164642	99.17
	I-S1944495.001	500-011-535.50-58	BUILDING & GR BLANKET PO------PLUMBING PARTS	164642	31.29
	I-S1945830.001	500-011-535.50-58	BUILDING & GR BLANKET PO------PLUMBING PARTS	164642	150.68
01-000450 OKLAHOMA GAS AND ELECTR					
	I-08/2016- 35948058	500-011-535.30-33	UTILITIES EXP MULTI-SPORTS	164776	1,421.24
01-000525 THE SIGN DEPOT,LLC					
	I-16231	500-011-535.50-63	VEHICLE MAINT CITY DECALS FOR ALL DEPTS.	164845	206.17
01-000540 AT&T					
	I-08/2016-7608 1	500-011-535.30-31	PHONE & TELEC DMSC	164637	105.84
01-000579 CASTEEL'S TIRE BARN INC					
	I-1-156508	500-011-535.50-61	MINOR TOOLS & BLANKET PO-TIRE	164657	79.95
01-000624 CINTAS CORP					
	I-618750018	500-011-535.50-54	UNIFORMS BLANKET PO FOR UNIFORMS	164666	35.76
	I-618750702	500-011-535.50-54	UNIFORMS BLANKET PO FOR UNIFORMS	164666	35.76
	I-618751385	500-011-535.50-54	UNIFORMS BLANKET PO FOR UNIFORMS	164666	35.76
	I-618752066	500-011-535.50-54	UNIFORMS BLANKET PO FOR UNIFORMS	164666	35.76
01-000944 CRAWFORD & ASSOCIATES P					
	I-10030	500-011-535.20-21	PRORATED AUDI AUDIT PREPARATION	164678	3.56
	I-9979	500-011-535.20-21	PRORATED AUDI AUDIT PREPARATION	164678	7.08
01-001884 TEXOMA JANITORIAL SUPPL					
	I-3024	500-011-535.50-62	JANITORIAL SU CAN LINERS, FLOOR CLEANERS	164839	290.35

PACKET: 08171 AP CLAIMS 09/14/2016
VENDOR SET: 01
FUND : 500 MULTI-SPORTS COMPLEX
DEPARTMENT: 011 DURANT MULTI-SPORTS CMPLX BANK: 601
BUDGET TO USE: CB-CURRENT BUDGET

VENDOR NAME	ITEM #	G/L ACCOUNT NAME	DESCRIPTION	CHECK#	AMOUNT
01-002242 JP MORGAN CHASE - BANK					
	I-0253-9452-0816	500-011-535.50-61	MINOR TOOLS & MINOR TOOLS	000000	320.69
	I-0253-9452-0816	500-011-535.50-58	BUILDING & GR FALL BARRIER FOR PLAYGROUND	000000	1,298.70
	I-0253-9452-0816	500-011-535.50-61	MINOR TOOLS & AIRLESS SPRAYER	000000	424.50
	I-0253-9452-0816	500-011-535.50-69	OTHER EQUIP P BLANKET PO	000000	119.99
01-002717 TEXOMA UTILITY EQUIPMEN					
	I-139368	500-011-535.50-72	TRACTOR MAINT DISC PARTS	164843	63.20
01-002831 BLACKBURN PLUMBING					
	I-P816.33	500-011-535.50-58	BUILDING & GR AUGUST TOILET SERVICE AT DMSC	164644	65.00
01-003100 FUELMAN OF SOUTHERN OKL					
	I-08/2016-BG159577	500-011-535.50-52	FUEL FUEL-MULTISPORTS COMPLEX	000000	0.00
01-004143 TOUCHTONE COMMUNICATION					
	I-08/2016-809247222	500-011-535.30-33	UTILITIES EXP LONG DISTANCE DMSC	164851	0.00
01-004980 DOUGLASS DISTRIBUTING					
	I-08/2016-DURCIT	500-011-535.50-52	FUEL DMSC	164689	8.37
	I-08/2016A-DURCIT	500-011-535.50-52	FUEL DMSC	164689	9.95
	I-08/2016B-DURCIT	500-011-535.50-52	FUEL DMSC	164689	10.15
	I-08/2016C-DURCIT	500-011-535.50-52	FUEL DMSC	164689	8.00
	I-08/2016D-DURCIT	500-011-535.50-52	FUEL DMSC	164689	10.92

DEPARTMENT 011 DURANT MULTI-SPORTS CMPLXTOTAL: 5,359.64

FUND 500 MULTI-SPORTS COMPLEX TOTAL: 6,974.97

PACKET: 08171 AP CLAIMS 09/14/2016
VENDOR SET: 01
FUND : 610 CEMETERY OPERATIONS FUND
DEPARTMENT: N/A NON-DEPARTMENTAL BANK: 601
BUDGET TO USE: CB-CURRENT BUDGET

VENDOR	NAME	ITEM #	G/L ACCOUNT NAME	DESCRIPTION	CHECK#	AMOUNT
01-1	MISCELLANEOUS VENDOR					
	JOHN YEAGER	I-201608169938	610-000-341.45-00	SALE OF CEMET JOHN YEAGER: LOT BUY BACK	164754	375.00
				DEPARTMENT NON-DEPARTMENTAL TOTAL:		375.00

PACKET: 08171 AP CLAIMS 09/14/2016
VENDOR SET: 01
FUND : 610 CEMETERY OPERATIONS FUND
DEPARTMENT: 050 HIGHLAND CEMETERY BANK: 601
BUDGET TO USE: CB-CURRENT BUDGET

VENDOR NAME	ITEM #	G/L ACCOUNT NAME	DESCRIPTION	CHECK#	AMOUNT
01-000164 DURANT TRUE VALUE LUMBE					
	I-591915	610-050-572.50-58	BUILDING AND OFFICE PAINTING MATERIALS	164695	68.97
01-000540 AT&T					
	I-08/2016-7608 1	610-050-572.30-31	PHONE & TELEC CEMETERY	164637	12.75
01-001671 SOUTHEASTERN ELECTRIC					
	I-AUG 2016	610-050-572.30-33	UTILITIES CMTRY OFFICE/SHOP 16370-005	164829	62.46
	I-AUG 2016	610-050-572.30-33	UTILITIES CMTRY SEC. LIGHT 16370-013	164829	10.62
01-003100 FUELMAN OF SOUTHERN OKL					
	I-08/2016-BG159577	610-050-572.50-52	FUEL CEMETERY-FUEL	000000	0.00
01-003190 P.L. PAT PHELPS					
	I-1612	610-050-572.70-71	MISC. EXPENDI CEMETERY LEGAL SERVICES	164803	227.50
01-004143 TOUCHTONE COMMUNICATION					
	I-08/2016-809247222	610-050-572.30-31	PHONE & TELEC LONG DISTANCE CHGS CEMTRY	164851	0.00
01-004980 DOUGLASS DISTRIBUTING					
	I-08/2016-DURCIT	610-050-572.50-52	FUEL CEMETERY	164689	49.34
	I-08/2016A-DURCIT	610-050-572.50-52	FUEL CEMETERY	164689	58.69
	I-08/2016B-DURCIT	610-050-572.50-52	FUEL CEMETERY	164689	59.86
	I-08/2016C-DURCIT	610-050-572.50-52	FUEL CEMETERY	164689	47.18
	I-08/2016D-DURCIT	610-050-572.50-52	FUEL CEMETERY	164689	64.40
01-005702 BRADY WILCOX					
	I-11	610-050-572.30-51	MOWING CONTRA CEMETERY MOWING CONTRACT	164670	17,270.92
	I-13	610-050-572.30-51	MOWING CONTRA CEMETERY MOWING CONTRACT	164670	1,270.45

DEPARTMENT 050 HIGHLAND CEMETERY TOTAL: 19,203.14

FUND 610 CEMETERY OPERATIONS FUND TOTAL: 19,578.14

REPORT GRAND TOTAL: 1,052,381.85

** G/L ACCOUNT TOTALS **

YEAR	ACCOUNT	NAME	AMOUNT	=========LINE ITEM========= ANNUAL BUDGET	BUDGET AVAILABLE	OVER BUDG	=======GROUP BUDGET======= ANNUAL BUDGET	BUDGET AVAILABLE	OVER BUDG
2015-2016	001-018-519.70-72	TRAINING AND TRAVEL	29.25	6,500	3,719.99		289,283	18,675.44	
	405-049-554.70-59	LANDFILL EQUIP. REPAIR	70.46	70,000	2,053.42		946,491	28,900.56	
	** 2015-2016 YEAR TOTALS **		99.71						
2016-2017	001-000-331.10-01	POOL RENTAL FEE*NON-EXPENS	350.00	5,000-	2,300.00				
	001-001-513.30-31	PHONE & TELECOMMUNICATION	37.78	400	171.82		561,185	492,770.05	
	001-001-513.30-32	FREIGHT & POSTAGE	27.46	500	447.40		561,185	492,770.05	
	001-001-513.30-51	CONTRACT LABOR	9,887.25	0	14,500.00-	Y	561,185	492,770.05	
	001-001-513.50-51	OFFICE SUPPLIES	50.30	4,000	2,551.36		561,185	492,770.05	
	001-001-513.50-57	MEMBERSHIPS & SUBSCRIPTION	318.00	5,000	4,132.00		561,185	492,770.05	
	001-001-513.70-77	MISC. MEETING EXPENSES	37.25	0	640.60-	Y	561,185	492,770.05	
	001-002-514.30-31	PHONE & TELECOMMUNICATION	27.49	400	287.12		147,117	127,202.98	
	001-002-514.30-32	FREIGHT AND POSTAGE	202.04	6,500	4,649.36		147,117	127,202.98	
	001-002-514.50-64	FUEL	0.00	0	0.00		147,117	127,202.98	
	001-003-515.30-31	PHONE & TELECOMMUNICATION	0.52	100	95.27		165,950	132,306.80	
	001-003-515.50-51	OFFICE SUPPLIES	294.34	1,500	190.98		165,950	132,306.80	
	001-003-515.70-72	TRAINING AND TRAVEL	281.77	3,500	249.71		165,950	132,306.80	
	001-004-516.30-77	INTERNAL LEGAL SVCS	4,550.00	60,000	46,000.00		88,800	73,973.79	
	001-004-516.50-56	LEGAL SUBSCRIPTION SERVICE	120.78	2,500	2,000.00		88,800	73,973.79	
	001-005-521.10-12	OVERTIME	364.39	75,000	65,039.72		4,787,081	3,967,658.65	
	001-005-521.30-31	PHONE & TELECOMMUNICATION	639.21	10,000	8,753.37		4,787,081	3,967,658.65	
	001-005-521.30-33	UTILITIES	2,921.93	48,770	43,037.85		4,787,081	3,967,658.65	
	001-005-521.30-48	JANITORIAL SERVICES CONTRA	2,170.00	16,130	9,910.01-	Y	4,787,081	3,967,658.65	
	001-005-521.30-95	OHS TRAFFIC ENF. GRANT EXP	281.39	48,750	41,188.65		4,787,081	3,967,658.65	
	001-005-521.50-51	OFFICE SUPPLIES	170.93	7,500	5,394.42		4,787,081	3,967,658.65	
	001-005-521.50-52	FUEL	5,640.78	110,000	98,381.61		4,787,081	3,967,658.65	
	001-005-521.50-57	MEMBERSHIPS	120.00	4,500	732.00		4,787,081	3,967,658.65	
	001-005-521.50-58	BUILDING MAINTENANCE	895.97	10,000	684.92		4,787,081	3,967,658.65	
	001-005-521.50-62	JANITORAL SUPPLIES	363.05	5,000	2,510.00		4,787,081	3,967,658.65	
	001-005-521.50-63	VEHICLE MAINTENANCE	8,278.26	60,000	43,027.37		4,787,081	3,967,658.65	
	001-005-521.50-69	OTHER EQUIP PARTS & MAINT	338.95	49,000	4,383.31		4,787,081	3,967,658.65	
	001-005-521.50-80	FORENSIC EQUIPMENT	87.36	2,000	535.15		4,787,081	3,967,658.65	
	001-005-521.70-72	TRAINING AND TRAVEL	1,537.90	30,300	24,197.08		4,787,081	3,967,658.65	
	001-005-521.70-81	BRYAN CO. JAIL PAYMENT	8,110.00	97,500	0.00		4,787,081	3,967,658.65	
	001-006-523.30-15	VETERINARY SERVICES	40.00	500	0.00		107,192	87,930.05	
	001-006-523.50-52	FUEL	281.66	6,000	5,414.92		107,192	87,930.05	
	001-006-523.50-63	VEHICLE MAINTENANCE	432.48	1,500	1,232.48-	Y	107,192	87,930.05	
	001-006-523.50-69	OTHER EQUIP PARTS & MAINT	23.76	4,000	2,600.00		107,192	87,930.05	
	001-008-522.30-31	PHONE & TELECOMMUNICATION	333.83	5,000	4,384.91		3,020,889	2,602,968.59	
	001-008-522.30-32	FREIGHT & POSTAGE	19.28	400	178.15		3,020,889	2,602,968.59	
	001-008-522.30-33	UTILITIES	2,225.14	26,000	21,619.67		3,020,889	2,602,968.59	
	001-008-522.30-48	JANITORIAL SERVICES CONTRA	104.96	1,250	9.51-	Y	3,020,889	2,602,968.59	
	001-008-522.50-51	OFFICE SUPPLIES	456.00	3,000	2,344.00		3,020,889	2,602,968.59	
	001-008-522.50-52	FUEL	1,210.53	20,000	17,467.15		3,020,889	2,602,968.59	

** G/L ACCOUNT TOTALS **

YEAR	ACCOUNT	NAME	AMOUNT	LINE ITEM ANNUAL BUDGET	LINE ITEM BUDGET AVAILABLE	OVER BUDG	GROUP BUDGET ANNUAL BUDGET	GROUP BUDGET AVAILABLE	OVER BUDG
	001-008-522.50-58	BUILDING AND MAINTENANCE	893.12	12,000	10,432.94		3,020,889	2,602,968.59	
	001-008-522.50-61	MINOR TOOLS AND EQUIPMENT	1,251.09	35,000	26,367.55		3,020,889	2,602,968.59	
	001-008-522.50-62	JANITORAL SUPPLIES	552.91	7,000	5,314.27		3,020,889	2,602,968.59	
	001-008-522.50-63	VEHICLE MAINTENANCE	421.62	32,000	27,658.26		3,020,889	2,602,968.59	
	001-008-522.50-69	OTHER EQUIP PARTS & MAINT	399.99	6,000	2,336.01		3,020,889	2,602,968.59	
	001-008-522.70-72	TRAINING AND TRAVEL	1,684.38	15,000	11,273.62		3,020,889	2,602,968.59	
	001-008-522.70-80	PAGERS & RADIOS	184.68	6,000	4,755.00		3,020,889	2,602,968.59	
	001-009-532.30-31	PHONE & TELECOMMUNICATION	150.32	1,500	1,204.29		943,506	618,859.39	
	001-009-532.30-33	UTILITIES	445.93	20,000	18,124.92		943,506	618,859.39	
	001-009-532.30-65	MOWING CONTRACTS	41,449.16	0	210,641.30-	Y	943,506	618,859.39	
	001-009-532.50-52	FUEL	1,829.04	20,000	16,200.54		943,506	618,859.39	
	001-009-532.50-54	UNIFORMS	398.76	5,700	4,700.00		943,506	618,859.39	
	001-009-532.50-58	BUILDING AND MAINTENANCE	500.89	5,000	559.50		943,506	618,859.39	
	001-009-532.50-61	MINOR TOOLS AND EQUIPMENT	424.50	5,000	2,432.00		943,506	618,859.39	
	001-009-532.50-63	VEHICLE MAINTENANCE	226.66	5,000	3,131.35		943,506	618,859.39	
	001-009-532.50-68	TRACTOR & MOWER MAINTENANC	1,987.32	10,000	6,552.21		943,506	618,859.39	
	001-009-532.50-69	OTHER EQUIP PARTS & MAINT.	439.95	8,000	6,001.00		943,506	618,859.39	
	001-009-532.50-71	RECREATIONAL EQUIP. & MAIN	1,731.60	5,000	3,001.00		943,506	618,859.39	
	001-012-536.30-31	PHONE & TELECOMMUNICATION	84.84	300	130.32		104,225	52,538.94	
	001-012-536.30-33	UTILITIES	18.26	4,000	3,963.48		104,225	52,538.94	
	001-012-536.50-53	CHEMICALS, DRUGS, AND LAB	619.25	20,000	15,097.25		104,225	52,538.94	
	001-012-536.50-81	POOL CONCESSION	771.18	7,500	5,495.32		104,225	52,538.94	
	001-013-512.30-79	DIGITICKET SERVICE AGREEME	14,995.00	47,595	24,125.00		165,826	128,118.17	
	001-013-512.50-51	OFFICE SUPPLIES	583.81	1,000	342.91		165,826	128,118.17	
	001-013-512.50-57	MEMBERSHIPS	55.00	300	245.00		165,826	128,118.17	
	001-013-512.70-72	TRAINING & TRAVEL	50.00	3,000	2,069.98		165,826	128,118.17	
	001-014-525.20-55	NUISANCE ABATEMENT SERVICE	1,610.00	0	7,665.00-	Y	470,887	411,375.02	
	001-014-525.30-31	PHONE & TELECOMMUNICATION	27.08	400	111.15-	Y	470,887	411,375.02	
	001-014-525.30-39	LEGAL PUBLICATIONS REIMB	262.80	1,500	237.20		470,887	411,375.02	
	001-014-525.50-51	OFFICE SUPPLIES	49.00	1,500	1,298.88		470,887	411,375.02	
	001-014-525.50-52	FUEL	117.21	2,000	1,756.53		470,887	411,375.02	
	001-015-571.30-31	PHONE & TELECOMMUNICATION	414.83	5,000	3,783.50		673,125	538,399.00	
	001-015-571.30-33	UTILITIES	169.53	7,000	3,437.32		673,125	538,399.00	
	001-015-571.30-55	MAINTENANCE CONTRACT	6,485.00	6,500	15.00		673,125	538,399.00	
	001-015-571.50-32	POSTAGE & FREIGHT	15.99	3,000	2,200.00		673,125	538,399.00	
	001-015-571.50-51	OFFICE SUPPLIES	417.75	11,000	7,135.01		673,125	538,399.00	
	001-015-571.50-56	BOOKS AND PUBLICATIONS	5,191.12	50,000	14,063.92		673,125	538,399.00	
	001-015-571.50-58	BUILDING AND MAINTENANCE	763.50	25,000	12,624.94		673,125	538,399.00	
	001-015-571.50-99	HUMANITIES PROGRAMS	1,027.22	2,800	1,209.43		673,125	538,399.00	
	001-015-571.70-35	STATE AID EXPENDITURES	752.56	19,350	18,370.96		673,125	538,399.00	
	001-015-571.70-72	TRAINING AND TRAVEL	460.91	5,000	2,533.85		673,125	538,399.00	
	001-016-541.30-31	PHONE & TELECOMMUNICATION	54.24	600	491.98		907,686	740,116.32	
	001-016-541.30-51	CONTRACT LABOR	3,317.00	0	14,880.00-	Y	907,686	740,116.32	
	001-016-541.50-52	FUEL	3,582.68	60,000	52,557.66		907,686	740,116.32	
	001-016-541.50-54	UNIFORMS	343.02	6,500	5,007.06		907,686	740,116.32	

** G/L ACCOUNT TOTALS **

YEAR	ACCOUNT	NAME	AMOUNT	LINE ITEM ANNUAL BUDGET	LINE ITEM BUDGET AVAILABLE	OVER BUDG	GROUP BUDGET ANNUAL BUDGET	GROUP BUDGET AVAILABLE	OVER BUDG
	001-016-541.50-58	BUILDING AND MAINTENANCE	70.00	2,000	1,539.48		907,686	740,116.32	
	001-016-541.50-61	MINOR TOOLS AND EQUIPMENT	309.63	7,000	4,826.45		907,686	740,116.32	
	001-016-541.50-63	VEHICLE MAINTENANCE	4,921.50	26,000	19,497.43		907,686	740,116.32	
	001-016-541.50-67	SIGNS	4,337.20	15,000	10,207.24		907,686	740,116.32	
	001-016-541.50-69	OTHER EQUIP PARTS & MAINT	1,173.71	17,000	14,276.96		907,686	740,116.32	
	001-016-541.50-71	DRAINAGE MAINTENANCE	218.00	8,000	6,402.50		907,686	740,116.32	
	001-016-541.50-95	PAVING MAINTENANCE	12,677.67	50,000	14,625.13		907,686	740,116.32	
	001-016-541.50-96	PAVEMENT MARKING MATERIALS	700.00	5,000	3,590.32		907,686	740,116.32	
	001-018-519.30-31	PHONE & TELECOMMUNICATION	809.66	9,000	7,383.51		291,774	247,227.78	
	001-018-519.30-33	UTILITIES	37.02	12,000	11,925.45		291,774	247,227.78	
	001-018-519.50-49	COMPUTER SOFTWARE & ACCES.	370.00	1,500	1,000.00		291,774	247,227.78	
	001-018-519.50-51	OFFICE SUPPLIES	480.00	1,500	350.00		291,774	247,227.78	
	001-018-519.50-52	FUEL	262.64	5,000	4,441.19		291,774	247,227.78	
	001-018-519.50-54	UNIFORMS	258.93	1,000	142.79		291,774	247,227.78	
	001-018-519.50-57	MEMBERSHIPS	205.00	800	595.00		291,774	247,227.78	
	001-018-519.50-63	VEHICLE MAINT	569.18	5,000	3,675.65		291,774	247,227.78	
	001-018-519.50-69	EQUIP MAINT & PARTS	423.92	1,500	1,031.98		291,774	247,227.78	
	001-018-519.50-70	NEW SIREN MAINT	732.98	8,000	3,641.53		291,774	247,227.78	
	001-019-569.20-21	PRORATED AUDIT & FIN. CONS	397.64	36,970	751.50-	Y	2,743,219	2,566,109.37	
	001-019-569.30-31	PHONE SERVICE - COMMON COS	1,654.15	20,000	16,705.90		2,743,219	2,566,109.37	
	001-019-569.30-33	UTILITIES	19,961.86	240,000	200,895.49		2,743,219	2,566,109.37	
	001-019-569.30-38	ADVERTISING- GEN FUND	328.50	6,000	4,000.00		2,743,219	2,566,109.37	
	001-019-569.30-42	CITY HALL ELEVATOR MAINTEN	390.19	2,000	900.00		2,743,219	2,566,109.37	
	001-019-569.30-48	JANITORIAL SERVICES CONTRA	1,540.49	18,500	14.08		2,743,219	2,566,109.37	
	001-019-569.50-52	GENERAL GOV COMMON FUEL CO	2.29	200	195.25		2,743,219	2,566,109.37	
	001-019-569.50-58	BUILDING MAINT. & SUPPLIES	6,666.37	10,000	1,839.36		2,743,219	2,566,109.37	
	001-019-569.50-62	JANITORIAL SUPPLIES	23.95	3,000	2,000.00		2,743,219	2,566,109.37	
	001-019-569.50-63	VEHICLE MAINTENANCE	120.00	500	325.81		2,743,219	2,566,109.37	
	001-019-569.50-70	PHOTOCOPY PAPER	488.60	1,000	500.00-	Y	2,743,219	2,566,109.37	
	001-019-569.70-22	COUNCIL MEMBER COMPENSATIO	850.00	8,000	500.00		2,743,219	2,566,109.37	
	001-019-569.70-60	UBCC FEES DUE TO STATE OF	576.00	2,500	1,748.00		2,743,219	2,566,109.37	
	001-019-569.70-61	C.L.E.E.T. LAW ENF. TRAINI	1,769.64	0	1,072.83-	Y	2,743,219	2,566,109.37	
	001-019-569.70-66	DURANT HISTORICAL SOCIETY	2,125.00	8,500	0.00		2,743,219	2,566,109.37	
	001-019-569.70-77	A & G MISCELLANEOUS	927.13	15,000	13,937.87		2,743,219	2,566,109.37	
	001-021-541.30-31	PHONE & TELECOMMUNICATION	5.70	100	88.83		319,456	273,674.28	
	001-021-541.50-52	FUEL	117.05	2,800	2,556.86		319,456	273,674.28	
	001-021-541.50-54	UNIFORMS	219.00	4,000	2,500.00		319,456	273,674.28	
	001-021-541.50-61	MINOR TOOLS AND EQUIPMENT	356.00	6,000	5,644.00		319,456	273,674.28	
	001-021-541.50-63	VEHICLE MAINTENANCE	713.20	3,000	971.36		319,456	273,674.28	
	001-021-541.50-69	OTHER EQUIP PARTS & MAINT	523.30	5,000	3,783.61		319,456	273,674.28	
	001-021-541.50-71	OIL AND LUBRICANTS	824.33	50,000	43,525.28		319,456	273,674.28	
	001-023-592.30-33	UTILITIES	1,377.89	14,500	11,935.60		22,750	18,573.40	
	001-023-592.30-58	SECURITY MAINTENANCE	65.00	250	0.00		22,750	18,573.40	
	001-023-592.50-58	BUILDING AND MAINTENANCE	962.20	6,500	5,137.80		22,750	18,573.40	
	004-037-596.30-33	UTILITIES	0.00	0	0.00		0	0.76	

** G/L ACCOUNT TOTALS **

YEAR	ACCOUNT	NAME	AMOUNT	LINE ITEM ANNUAL BUDGET	LINE ITEM BUDGET AVAILABLE	LINE ITEM OVER BUDG	GROUP BUDGET ANNUAL BUDGET	GROUP BUDGET AVAILABLE	GROUP OVER BUDG
	005-066-569.20-11	ADMINISTRATIVE FEES	3,575.35	40,000	32,967.25		1,523,003	1,335,017.49	
	005-066-569.20-12	SPECIFIC PREMIUM	30,118.29	400,000	339,709.23		1,523,003	1,335,017.49	
	005-066-569.20-13	ANNUAL AGGREGATE PREMIUM	862.99	10,000	8,302.65		1,523,003	1,335,017.49	
	010-020-560.30-31	PHONE & TELECOMMUNICATIONS	110.30	3,000	1,264.62		558,684	377,440.33	
	010-020-560.30-35	COPIER LEASE & USE FEES	3,843.38	38,000	2,674.51		558,684	377,440.33	
	010-020-560.30-40	INTERNET SERVICE / GMAIL	1,450.80	16,692	10,828.21		558,684	377,440.33	
	010-020-560.30-50	SOFTWARE/SERVER MAINT	540.00	20,000	16,900.00		558,684	377,440.33	
	010-020-560.30-51	CONTRACT LABOR	1,500.00	12,000	4,000.00		558,684	377,440.33	
	010-020-560.30-52	GIS SERVICES	275.50	2,845	1,652.50		558,684	377,440.33	
	010-020-560.30-70	AGENDA PREP SOFTWARE	4,950.00	3,000	1,950.00-	Y	558,684	377,440.33	
	010-020-560.30-90	ACCOUNTING SOFTWARD & MAIN	29,517.93	60,000	0.00		558,684	377,440.33	
	010-020-560.50-49	NETWORK PRINTER SUPPLIES	1,391.71	7,000	1,300.00		558,684	377,440.33	
	010-020-560.50-69	OTHER EQUIP PARTS & MAINT	467.80	12,000	9,661.27		558,684	377,440.33	
	010-020-560.80-01	HARDWARE PURCHASES - PC's	1,411.49	65,000	61,358.41		558,684	377,440.33	
	010-020-560.80-03	NETWORK HARDWARE UPGRADE	3,299.94	8,500	1,100.06		558,684	377,440.33	
	015-008-522.61-48	FY17 OEC GRNT SWIFT H20 RS	3,510.00	0	3,510.00-	Y	54,000	50,490.00	
	015-009-532.62-12	FY14 TSET EXP SLATON PARK	11,322.75	0	17,238.70-	Y	0	23,094.22-	Y
	015-009-532.62-15	FY17 ROCKET PARK BATHROOM	1,334.68	0	5,855.52-	Y	0	23,094.22-	Y
	015-016-541.62-95	FY17 MIDDLE SCHOOL DRAINAG	23.25	248,000	247,955.05		248,000	247,955.05	
	015-019-569.85-23	NOTE PAYABLE-LANDFILL PROP	13,690.99	163,512	122,510.03		996,641	818,268.71	
	015-019-569.85-34	DMSC FIELD LIGHTING DEBT S	2,144.80	25,738	19,303.60		996,641	818,268.71	
	015-019-569.85-45	FY12 GARAGE FORKLIFT	1,233.31	3,337	120.61-	Y	996,641	818,268.71	
	015-019-569.85-47	FY12 AUTOMATED REFUSE TRUC	3,830.70	42,138	30,645.91		996,641	818,268.71	
	015-019-569.85-49	FY12 SWC COMPACTOR BODY 50	1,410.44	15,515	11,283.67		996,641	818,268.71	
	015-019-569.85-56	FY13 STREET BACKHOE	2,079.96	24,960	18,720.12		996,641	818,268.71	
	015-019-569.85-57	FY13 PD VEHICLES	5,800.91	17,587	61.57		996,641	818,268.71	
	015-019-569.85-59	FY14 SWC- ROLLOFF TRUCK	5,269.31	36,885	21,077.07		996,641	818,268.71	
	015-019-569.85-61	FY14 OLD COUNTRY CLUB PROP	6,000.18	72,002	54,001.46		996,641	818,268.71	
	015-019-569.85-62	FY14 STREET DUMP TRUCKS (2	4,837.07	58,045	43,533.79		996,641	818,268.71	
	015-019-569.85-63	FY15 (4) PD TAHOES/ W EQUI	2,866.86	34,402	25,801.42		996,641	818,268.71	
	015-405-555.61-40	EOC ROADWAY & PARKING ACCE	198.97	0	1,998.97-	Y	0	1,998.97-	Y
	020-017-537.20-21	AUDIT FEES (PRORATED)	145.09	13,485	279.00-	Y	356,592	296,694.17	
	020-017-537.30-31	PHONE & TELECOMMUNICATION	64.09	1,200	1,072.28		356,592	296,694.17	
	020-017-537.30-32	POSTAGE AND FREIGHT	32.28	300	267.25		356,592	296,694.17	
	020-017-537.30-36	CONSULTING FEES	87.50	10,000	9,825.00		356,592	296,694.17	
	020-017-537.30-38	PUBLICATIONS & ADVERTISING	979.48	10,000	6,641.82		356,592	296,694.17	
	020-017-537.50-50	PHOTOCOPIES	1,385.00	2,500	955.00		356,592	296,694.17	
	020-017-537.50-52	FUEL	104.85	1,500	1,344.39		356,592	296,694.17	
	020-017-537.50-57	MEMBERSHIPS	600.00	4,000	3,150.00		356,592	296,694.17	
	020-017-537.50-62	JANITORIAL SERVICES	30.00	360	180.00		356,592	296,694.17	
	020-017-537.50-63	VEHICLE MAINTENANCE	10.00	500	490.00		356,592	296,694.17	
	020-017-537.70-72	TRAINING & TRAVEL	81.29	6,000	5,842.95		356,592	296,694.17	
	020-067-596.66-11	CMP - CDBG LOAN PMT. EXP.	1,250.00	15,000	11,250.00		1,129,677	1,094,169.39	
	020-067-596.66-12	BL - CDBG LOAN PMT. EXP.	2,083.34	25,000	18,749.98		1,129,677	1,094,169.39	
	020-067-596.66-13	CG - CDBG LOAN PMT. EXP.	1,666.67	20,000	14,999.99		1,129,677	1,094,169.39	

** G/L ACCOUNT TOTALS **

YEAR	ACCOUNT	NAME	AMOUNT	LINE ITEM ANNUAL BUDGET	LINE ITEM BUDGET AVAILABLE	LINE ITEM OVER BUDG	GROUP BUDGET ANNUAL BUDGET	GROUP BUDGET AVAILABLE	GROUP BUDGET OVER BUDG
	020-067-596.66-15	EB - CDBG LOAN PMT. EXP.	354.17	4,250	3,187.49		1,129,677	1,094,169.39	
	020-067-596.66-17	ES - CDBG LOAN PMT. EXP.	1,666.48	20,000	15,000.56		1,129,677	1,094,169.39	
	020-067-596.68-01	CG LAND ACQUISITION COSTS	4,815.21	57,783	43,337.37		1,129,677	1,094,169.39	
	101-007-527.20-21	PRORATED AUDIT FEES	17.06	1,588	30.75-	Y	804,820	678,842.35	
	101-007-527.30-31	PHONE & TELECOMMUNICATION	3,761.39	42,000	34,575.62		804,820	678,842.35	
	101-007-527.30-33	UTILITIES	54.23	1,100	990.93		804,820	678,842.35	
	101-007-527.30-53	COMMUNICATION SERVICE FEES	1,976.24	36,000	25,086.38		804,820	678,842.35	
	101-007-527.50-51	OFFICE SUPPLIES EXPENSE	5.00	2,500	1,300.00		804,820	678,842.35	
	101-007-527.50-57	MEMBERSHIPS	60.80	2,000	870.00		804,820	678,842.35	
	101-007-527.70-72	TRAINING & TRAVEL EXP	238.00	10,000	8,237.66		804,820	678,842.35	
	206-065-503.20-21	PRORATED AUDIT FEES	19.89	1,847	40.00-	Y	1,442,369	1,098,664.96	
	206-065-503.30-31	PHONE & TELECOMMUNICATION	297.07	2,500	1,909.60		1,442,369	1,098,664.96	
	206-065-503.30-33	UTILITIES	2,054.22	24,000	19,704.01		1,442,369	1,098,664.96	
	206-065-503.30-48	JANITORIAL SERVICES	289.33	4,000	528.00		1,442,369	1,098,664.96	
	206-065-503.30-51	CONTRACT LABOR	455.00	11,520	11,065.00		1,442,369	1,098,664.96	
	206-065-503.30-55	AWOS TELECOM & MAINT CONTR	495.00	6,000	2,780.00		1,442,369	1,098,664.96	
	206-065-503.30-66	OPERATOR'S SHARE IN SALES	12,414.02	135,000	0.00		1,442,369	1,098,664.96	
	206-065-503.50-52	FUEL FOR SERVICE TRUCK	69.79	2,000	1,790.07		1,442,369	1,098,664.96	
	206-065-503.50-63	VEHICLE MAINTENANCE	55.03	500	444.97		1,442,369	1,098,664.96	
	206-065-503.70-86	JET FUEL PURCHASES	13,991.59	300,000	272,072.78		1,442,369	1,098,664.96	
	206-065-503.80-05	FY16 10 T HANGAR CONSTRUCT	113,701.50	106,460	28,382.10-	Y	1,442,369	1,098,664.96	
	206-065-503.90-89	FY16 10 T HANGAR PRNCP PYM	3,141.91	37,774	28,467.90		1,442,369	1,098,664.96	
	206-065-503.90-90	FY16 10 T HANGAR INT EXPEN	1,351.51	16,147	11,972.84		1,442,369	1,098,664.96	
	210-000-101.06-03	2009A PRIN. ACT- FBI 1010	20,000.00						
	210-000-101.06-04	2009A INT. ACT- FBI 10106	16,687.50						
	210-000-101.06-09	2009B PRIN. ACT- FBI 10115	6,666.67						
	210-000-101.06-10	2009B INT. ACT- FBI 10116	5,755.37						
	210-000-101.06-12	2010 DCUA PRINCIPAL ACT101	20,833.33						
	210-000-101.06-13	2010 DCUA INTREST ACT FBI1	16,100.64						
	210-000-101.23-03	2012A PRIN. ACT- FBI 10173	74,166.67						
	210-000-101.23-04	2012A INT. ACT.- FBI 10174	10,026.67						
	210-000-101.24-03	2013 PRIN. ACT- FBI 10193	38,333.33						
	210-000-101.24-04	2013 INT. ACT. FBI 10194	4,532.00						
	210-046-528.90-95	INTEREST EXPENSE	13,806.75	164,710	122,316.91		428,045	320,651.90	
	210-046-528.90-96	PRINCIPAL PYMTS 2007 US ST	21,666.67	263,335	198,334.99		428,045	320,651.90	
	215-078-528.20-05	LEGAL FEES	70.00	600	530.00		2,975,374	2,955,388.91	
	215-078-528.20-21	PRORATED AUDIT FEES	53.73	4,992	104.75-	Y	2,975,374	2,955,388.91	
	250-131-596.60-01	14CDBG-ED16246 CCLUB RD. P	68,454.66	653,153	4,675.41-	Y	653,153	4,675.41-	Y
	315-015-571.50-56	BOOKS, TAPES, VIDEOS	199.40	4,000	2,708.20		51,232	49,940.20	
	405-000-361.24-00	TAP FEES: WATER*NON-EXPENS	1,112.75	187,000-	163,295.45-				
	405-024-565.30-31	PHONE & TELECOMMUNICATION	28.50	500	444.15		68,906	63,926.50	
	405-024-565.50-52	FUEL	53.14	750	639.61		68,906	63,926.50	
	405-025-550.30-33	UTILITY BILLING SERVICES	3,194.59	27,000	19,531.72		353,874	311,332.66	
	405-025-550.30-37	PRINTING SERVICES	87.00	700	613.00		353,874	311,332.66	
	405-026-551.30-31	PHONE & TELECOMMUNICATION	1,065.42	7,000	5,257.98		1,017,629	914,277.20	

** G/L ACCOUNT TOTALS **

YEAR	ACCOUNT	NAME	AMOUNT	LINE ITEM ANNUAL BUDGET	LINE ITEM BUDGET OVER AVAILABLE BUDG	GROUP BUDGET ANNUAL BUDGET	GROUP BUDGET OVER AVAILABLE BUDG
	405-026-551.50-51	OFFICE SUPPLIES	82.00	500	421.72	1,017,629	914,277.20
	405-026-551.50-52	FUEL	1,758.22	32,000	28,347.64	1,017,629	914,277.20
	405-026-551.50-54	UNIFORMS	362.00	5,500	3,510.11	1,017,629	914,277.20
	405-026-551.50-58	BUILDING AND MAINTENANCE	43.97	2,500	1,721.48	1,017,629	914,277.20
	405-026-551.50-63	VEHICLE MAINTENANCE	296.50	30,000	28,368.99	1,017,629	914,277.20
	405-026-551.50-70	LIFT STATIONS MAINT. & REP	1,538.17	25,000	19,871.83	1,017,629	914,277.20
	405-026-551.50-76	WATER MAIN MAINT & REPAIR	2,142.90	55,000	51,085.14	1,017,629	914,277.20
	405-026-551.50-79	METER MAINT & REPAIR	1,182.53	100,000	98,815.00	1,017,629	914,277.20
	405-026-551.70-72	TRAINING AND TRAVEL	930.00	1,750	820.00	1,017,629	914,277.20
	405-027-552.30-31	PHONE & TELECOMMUNICATION	39.25	2,200	2,121.96	1,069,962	811,486.96
	405-027-552.30-33	UTILITIES	30,496.52	245,000	192,951.25	1,069,962	811,486.96
	405-027-552.50-51	OFFICE SUPPLIES	75.00	1,100	1,025.00	1,069,962	811,486.96
	405-027-552.50-52	FUEL	202.60	7,500	7,079.15	1,069,962	811,486.96
	405-027-552.50-53	CHEMICALS, DRUGS, AND LAB	14,079.83	285,000	155,826.48	1,069,962	811,486.96
	405-027-552.50-54	UNIFORMS	265.21	4,200	2,700.00	1,069,962	811,486.96
	405-027-552.50-58	BUILDING AND MAINTENANCE	5,870.14	25,000	12,812.84	1,069,962	811,486.96
	405-027-552.50-61	MINOR TOOLS AND EQUIPMENT	197.36	6,000	4,743.96	1,069,962	811,486.96
	405-027-552.50-62	JANITORAL SUPPLIES	46.56	900	853.44	1,069,962	811,486.96
	405-027-552.50-63	VEHICLE MAINTENANCE	206.01	10,000	9,793.99	1,069,962	811,486.96
	405-027-552.50-71	LAKE DURANT REPAIR & MAINT	243.00	4,500	4,257.00	1,069,962	811,486.96
	405-027-552.70-72	TRAINING AND TRAVEL	204.78	3,000	2,795.22	1,069,962	811,486.96
	405-027-552.70-74	SAFETY EQUIPMENT	120.00	1,000	880.00	1,069,962	811,486.96
	405-028-553.30-31	PHONE & TELECOMMUNICATION	159.92	7,500	7,182.65	853,621	647,437.61
	405-028-553.30-32	FREIGHT AND POSTAGE	29.21	2,000	1,500.00	853,621	647,437.61
	405-028-553.30-33	UTILITIES	12,065.10	175,000	150,059.20	853,621	647,437.61
	405-028-553.30-36	SLUDGE DISPOSAL	5,625.00	90,000	0.00	853,621	647,437.61
	405-028-553.50-52	FUEL	171.38	4,400	4,046.60	853,621	647,437.61
	405-028-553.50-53	CHEMICALS, DRUGS, AND LAB	1,941.44	65,000	55,219.05	853,621	647,437.61
	405-028-553.50-54	UNIFORMS	270.77	4,500	3,000.00	853,621	647,437.61
	405-028-553.50-61	MINOR TOOLS AND EQUIPMENT	119.97	4,500	3,990.01	853,621	647,437.61
	405-028-553.50-63	VEHICLE MAINTENANCE	206.01	3,000	2,793.99	853,621	647,437.61
	405-028-553.50-69	OTHER EQUIP PARTS & MAINT	16,681.99	75,000	51,043.53	853,621	647,437.61
	405-028-553.70-72	TRAINING AND TRAVEL	436.82	3,000	2,221.18	853,621	647,437.61
	405-029-554.30-31	PHONE & TELECOMMUNICATION	17.10	500	466.49	1,093,454	946,799.75
	405-029-554.50-52	FUEL	5,535.14	85,000	73,354.84	1,093,454	946,799.75
	405-029-554.50-53	PUBLICATIONS	154.30	1,500	1,345.70	1,093,454	946,799.75
	405-029-554.50-54	UNIFORMS	621.00	8,000	4,000.00	1,093,454	946,799.75
	405-029-554.50-58	BUILDING AND MAINTENANCE	82.94	6,000	4,653.48	1,093,454	946,799.75
	405-029-554.50-61	MINOR TOOLS AND EQUIPMENT	27.98	3,000	500.00	1,093,454	946,799.75
	405-029-554.50-63	VEHICLE MAINTENANCE	3,134.13	100,000	88,807.64	1,093,454	946,799.75
	405-029-554.50-79	DUMPSTERS	217.50	30,000	27,000.00	1,093,454	946,799.75
	405-029-554.50-81	ROLL-OFF BINS	1,173.75	10,000	4,601.25	1,093,454	946,799.75
	405-029-554.50-82	COMPACTORS	851.53	20,000	18,257.75	1,093,454	946,799.75
	405-029-554.50-83	POLYCARTS	2,749.69	40,000	35,743.00	1,093,454	946,799.75
	405-029-554.70-73	SHARPS DISPOSAL PROGRAM	456.32	3,000	2,543.68	1,093,454	946,799.75

** G/L ACCOUNT TOTALS **

YEAR	ACCOUNT	NAME	AMOUNT	=========LINE ITEM========= ANNUAL BUDGET	BUDGET AVAILABLE	OVER BUDG	=======GROUP BUDGET======= ANNUAL BUDGET	BUDGET AVAILABLE	OVER BUDG
	405-030-555.20-21	PRORATED AUDIT FEES	331.04	30,778	625.75-	Y	8,287,050	7,703,516.65	
	405-030-555.30-38	ADVERTISING- DCUA	29.40	4,500	4,443.16		8,287,050	7,703,516.65	
	405-030-555.30-48	JANITORIAL SERVICES CONTRA	35.82	6,500	6,070.13		8,287,050	7,703,516.65	
	405-030-555.70-79	CDL RENEWAL FEES ALL DEPTS	79.50	500	200.00		8,287,050	7,703,516.65	
	405-030-555.70-97	WATER & WASTEWATER PERMIT	651.96	23,000	22,000.33		8,287,050	7,703,516.65	
	405-031-552.30-33	UTILITIES	760.88	10,000	8,396.47		38,000	30,161.45	
	405-031-552.30-51	CONTRACT LABOR	1,466.85	18,000	13,500.00		38,000	30,161.45	
	405-031-552.50-52	FUEL	9.96	2,000	1,979.30		38,000	30,161.45	
	405-049-554.30-31	PHONE & TELECOMMUNICATION	0.00	300	300.00		1,118,691	673,633.88	
	405-049-554.30-33	UTILITIES	0.00	1,000	584.08		1,118,691	673,633.88	
	405-049-554.30-44	SOLID WASTE DISPOSAL FEES	35,004.28	500,000	140,000.00		1,118,691	673,633.88	
	405-049-554.50-51	OFFICE SUPPLIES	105.57	500	250.00		1,118,691	673,633.88	
	405-049-554.50-52	FUEL	4,827.68	110,000	99,367.51		1,118,691	673,633.88	
	405-049-554.50-54	UNIFORMS	319.28	4,000	2,500.00		1,118,691	673,633.88	
	405-049-554.50-58	BUILDING AND MAINTENANCE	340.40	7,500	6,236.08		1,118,691	673,633.88	
	405-049-554.50-61	MINOR TOOLS AND EQUIPMENT	144.85	3,500	3,000.00		1,118,691	673,633.88	
	405-049-554.50-65	OILS & LUBRICANTS	1,565.00	5,000	3,435.00		1,118,691	673,633.88	
	405-049-554.70-59	LANDFILL EQUIP. REPAIR	3,390.58	70,000	59,631.19		1,118,691	673,633.88	
	500-010-534.10-18	CONCESSION SALARIES & WAGE	238.46	18,000	16,851.63		134,580	122,174.60	
	500-010-534.55-01	CONCESSION PRODUCT INVENTO	1,373.88	30,000	27,205.22		134,580	122,174.60	
	500-010-534.55-03	CONCESSION MINOR TOOLS & E	2.99	5,000	4,947.01		134,580	122,174.60	
	500-011-535.20-21	PRORATED AUDIT FEES	10.64	990	18.25-	Y	451,051	389,211.90	
	500-011-535.30-31	PHONE & TELECOMMUNICATIONS	241.36	3,000	2,521.54		451,051	389,211.90	
	500-011-535.30-33	UTILITIES EXPENSE	1,421.24	15,000	12,514.41		451,051	389,211.90	
	500-011-535.50-52	FUEL	47.39	3,000	2,901.57		451,051	389,211.90	
	500-011-535.50-54	UNIFORMS	143.04	1,500	500.00		451,051	389,211.90	
	500-011-535.50-58	BUILDING & GROUNDS MAINTEN	1,973.18	25,000	18,264.87		451,051	389,211.90	
	500-011-535.50-61	MINOR TOOLS & EQUIP.	843.08	3,500	355.81		451,051	389,211.90	
	500-011-535.50-62	JANITORIAL SUPPLES	290.35	2,000	1,709.65		451,051	389,211.90	
	500-011-535.50-63	VEHICLE MAINTENANCE	206.17	1,000	793.83		451,051	389,211.90	
	500-011-535.50-69	OTHER EQUIP PARTS & MAINT	119.99	5,000	3,001.00		451,051	389,211.90	
	500-011-535.50-72	TRACTOR MAINT	63.20	5,000	2,915.10		451,051	389,211.90	
	610-000-341.45-00	SALE OF CEMETER*NON-EXPENS	375.00	20,000-	19,662.50-				
	610-050-572.30-31	PHONE & TELECOMMUNICATION	12.75	140	115.01		197,350	126,102.58	
	610-050-572.30-33	UTILITIES	73.08	2,000	1,847.77		197,350	126,102.58	
	610-050-572.30-51	MOWING CONTRACTS	18,541.37	86,210	18,140.32		197,350	126,102.58	
	610-050-572.50-52	FUEL	279.47	0	580.54-	Y	197,350	126,102.58	
	610-050-572.50-58	BUILDING AND MAINTENANCE	68.97	2,000	1,602.47		197,350	126,102.58	
	610-050-572.70-71	MISC. EXPENDITURES	227.50	1,000	772.50		197,350	126,102.58	

** 2016-2017 YEAR TOTALS ** 1,052,282.14

** DEPARTMENT TOTALS **

ACCT	NAME	AMOUNT
001	NON-DEPARTMENTAL	350.00
001-001	CITY ADMINISTRATION	10,358.04
001-002	CITY CLERK DEPARTMENT	229.53
001-003	CITY TREASURER DEPT.	576.63
001-004	LEGAL SERVICES-ATTORNEY	4,670.78
001-005	POLICE - LAW ENFORCEMENT	31,920.12
001-006	POLICE - ANIMAL CONTROL	777.90
001-008	FIRE DEPARTMENT	9,737.53
001-009	PARKS, REC. & GEN. SVCS.	49,584.13
001-012	CITY SWIMMING POOL	1,493.53
001-013	MUNICIPAL COURT	15,683.81
001-014	COMMUNITY DEVELOPMENT	2,066.09
001-015	PUBLIC LIBRARY	15,698.41
001-016	STREET DEPARTMENT	31,704.65
001-018	CIVIL EMERGENCY MGMT.	4,178.58
001-019	GENERAL GOVERNMENT	37,821.81
001-021	CITY GARAGE	2,758.58
001-023	SENIOR CITIZENS CENTER	2,405.09
001 TOTAL	GENERAL FUND	222,015.21
004-037	WHEELER FEDERAL BUILDING	0.00
004 TOTAL	FED BLDG ENTERPRISE FUND	0.00
005-066	EMPLOYEE HEALTH INS.	34,556.63
005 TOTAL	EMPLOYEE INSURANCE FUND	34,556.63
010-020	INFO. TECH. SERVICE DEPT.	48,758.85
010 TOTAL	INFO. TECH. SERVICE FUND	48,758.85
015-008	FIRE DEPARTMENT	3,510.00
015-009	PARKS & GENERAL SERVICES	12,657.43
015-016	STREET DEPARTMENT	23.25
015-019	GENERAL GOVERNMENT	49,164.53
015-405	2007 U.S.S.T.R.NOTE DISB.	198.97
015 TOTAL	CAPITAL IMPROVEMENTS FUND	65,554.18

** DEPARTMENT TOTALS **

ACCT	NAME	AMOUNT
020-017	ECON. DEV. ADMINISTRATION	3,519.58
020-067	INDUSTRIAL PROJECTS	11,835.87
020 TOTAL	DURANT INDUSTRIAL AUTH.	15,355.45
101-007	911 COMMUNICATIONS CTR.	6,112.72
101 TOTAL	SPECIAL 911 TAX FUND	6,112.72
206-065	EAKER FIELD	148,335.86
206 TOTAL	DURANT AIRPORT AUTHORITY	148,335.86
210	NON-DEPARTMENTAL	213,102.18
210-046	DCUA 2007 MISC NOTE	35,473.42
210 TOTAL	U A BONDS SINKING FUND	248,575.60
215-078	GEN. GOVT. & DEBT SERVICE	123.73
215 TOTAL	D.C.F.A. REVENUE FUND	123.73
250-131	CDBG-ED 16246 CCLUB RD	68,454.66
250 TOTAL	C. D. B. G.	68,454.66
315-015	R.L.WILLIAMS LIBRARY	199.40
315 TOTAL	R.L.WILLIAMS LIBRARY FUND	199.40
405	NON-DEPARTMENTAL	1,112.75
405-024	PUBLIC WORKS ADMIN.	81.64
405-025	UTILITY BILLING	3,281.59
405-026	WATER/SEWER LINE MAINT.	9,401.71
405-027	WATER TREATMENT PLANT	52,046.26
405-028	WWTP	37,707.61
405-029	COLLECTION - SOLID WASTE	15,021.38
405-030	UTILITY GENERAL ADMIN.	1,127.72
405-031	"LAKE DURANT"	2,237.69

** DEPARTMENT TOTALS **

ACCT	NAME	AMOUNT
405-049	DISPOSAL - SOLID WASTE	45,768.10
405 TOTAL	DURANT UTILITIES AUTH.	167,786.45
500-010	RECREATIONAL MARKETING	1,615.33
500-011	DURANT MULTI-SPORTS CMPLX	5,359.64
500 TOTAL	MULTI-SPORTS COMPLEX	6,974.97
610	NON-DEPARTMENTAL	375.00
610-050	HIGHLAND CEMETERY	19,203.14
610 TOTAL	CEMETERY OPERATIONS FUND	19,578.14
	** TOTAL **	1,052,381.85

NO ERRORS

** END OF REPORT **

PACKET: 08182 AP MANUAL 08/17/16

VENDOR SET: 01

FUND : 001 GENERAL FUND

DEPARTMENT: 001 CITY ADMINISTRATION

BANK: 601

BUDGET TO USE: CB-CURRENT BUDGET

VENDOR	NAME	ITEM #	G/L ACCOUNT NAME	DESCRIPTION	CHECK#	AMOUNT
01-005355	RED RIVER VALLEY ASSOCI					
		I-STEWART HOFFMAN	001-001-513.70-72	TRAINING AND REGISTRATION--STEWART HOFFMAN	164615	70.00
				DEPARTMENT 001 CITY ADMINISTRATION TOTAL:		70.00
				FUND 001 GENERAL FUND TOTAL:		70.00
				REPORT GRAND TOTAL:		70.00

** G/L ACCOUNT TOTALS **

YEAR	ACCOUNT	NAME	AMOUNT	LINE ITEM ANNUAL BUDGET	LINE ITEM BUDGET AVAILABLE	LINE ITEM OVER BUDG	GROUP BUDGET ANNUAL BUDGET	GROUP BUDGET AVAILABLE	GROUP BUDGET OVER BUDG
2016-2017	001-001-513.70-72	TRAINING AND TRAVEL	70.00	5,000	3,402.50		561,185	504,428.26	
	** 2016-2017 YEAR TOTALS **		70.00						

** DEPARTMENT TOTALS **

ACCT	NAME	AMOUNT
001-001	CITY ADMINISTRATION	70.00
001 TOTAL	GENERAL FUND	70.00
	** TOTAL **	70.00

NO ERRORS

** END OF REPORT **

PACKET: 08172 AP MANUAL 08/09/16

VENDOR SET: 01

FUND : 001 GENERAL FUND

DEPARTMENT: 003 CITY TREASURER DEPT.

BANK: 601

BUDGET TO USE: CB-CURRENT BUDGET

VENDOR	NAME	ITEM #	G/L ACCOUNT NAME	DESCRIPTION	CHECK#	AMOUNT
01-005349	GFOAO					
		I-AN-CHEN LAI 2016	001-003-515.70-72	TRAINING AND AN CHEN LAI FEES	164598	50.00
		I-MICHELLE HALL 2016	001-003-515.70-72	TRAINING AND MICHELLE HALL FEES	164598	60.00
				DEPARTMENT 003 CITY TREASURER DEPT.	TOTAL:	110.00

PACKET: 08172 AP MANUAL 08/09/16

VENDOR SET: 01

FUND : 001 GENERAL FUND

DEPARTMENT: 004 LEGAL SERVICES-ATTORNEY BANK: 601

BUDGET TO USE: CB-CURRENT BUDGET

VENDOR	NAME	ITEM #	G/L ACCOUNT NAME	DESCRIPTION	CHECK#	AMOUNT
01-003190	P.L. PAT PHELPS					
		I-1606	001-004-516.30-77	INTERNAL LEGA LEGAL SERVICES	164599	5,267.50
		I-1610	001-004-516.50-56	LEGAL SUBSCRI LEGAL FORM SUBSCRIPTIONS	164599	120.78
				DEPARTMENT 004 LEGAL SERVICES-ATTORNEY TOTAL:		5,388.28
				FUND 001 GENERAL FUND TOTAL:		5,498.28

PACKET: 08172 AP MANUAL 08/09/16

VENDOR SET: 01

FUND : 020 DURANT INDUSTRIAL AUTH.

DEPARTMENT: 017 ECON. DEV. ADMINISTRATION BANK: 601

BUDGET TO USE: CB-CURRENT BUDGET

VENDOR	NAME	ITEM #	G/L ACCOUNT NAME	DESCRIPTION	CHECK#	AMOUNT
01-003190	P.L. PAT PHELPS					
		I-1609	020-017-537.30-36	CONSULTING FE REVIEW TRUST INDENTURE OF DIA	164599	87.50
				DEPARTMENT 017 ECON. DEV. ADMINISTRATIONTOTAL:		87.50
				FUND 020 DURANT INDUSTRIAL AUTH. TOTAL:		87.50
				REPORT GRAND TOTAL:		5,585.78

** G/L ACCOUNT TOTALS **

YEAR	ACCOUNT	NAME	AMOUNT	LINE ITEM ANNUAL BUDGET	LINE ITEM BUDGET OVER AVAILABLE BUDG	GROUP BUDGET ANNUAL BUDGET	GROUP BUDGET BUDGET OVER AVAILABLE BUDG
2016-2017	001-003-515.70-72	TRAINING AND TRAVEL	110.00	3,500	955.49	165,950	147,770.14
	001-004-516.30-77	INTERNAL LEGAL SVCS	5,267.50	60,000	46,000.00	88,800	74,105.79
	001-004-516.50-56	LEGAL SUBSCRIPTION SERVICE	120.78	2,500	2,000.00	88,800	74,105.79
	020-017-537.30-36	CONSULTING FEES	87.50	10,000	9,912.50	356,592	332,569.69
	** 2016-2017 YEAR TOTALS **		5,585.78				

** DEPARTMENT TOTALS **

ACCT	NAME	AMOUNT
001-003	CITY TREASURER DEPT.	110.00
001-004	LEGAL SERVICES-ATTORNEY	5,388.28
001 TOTAL	GENERAL FUND	5,498.28
020-017	ECON. DEV. ADMINISTRATION	87.50
020 TOTAL	DURANT INDUSTRIAL AUTH.	87.50
	** TOTAL **	5,585.78

NO ERRORS

** END OF REPORT **

Agenda Item: 1.j.

The City of Durant

Office of City Treasurer

Memorandum

Date: 8/25/2016
To: Mayor and City Council
From: Michelle Hall, Assistant City Treasurer
Re: Budget Amendment BA 2016-08 FINAL

Your authorization to approve Budget Amendment BA 2016-08 (the FINAL budget amendment for fiscal year 15/16) is requested. All of the adjustments are procedural in nature; necessary to carry out motions previously approved or pending by the City Council and/or to recognize revenue received.

All of the proposed budget changes have been reviewed with the City Manager, and the amendment is recommended for approval.

#1579 YE DEPT ADJ'S FOR GENERAL FUND
#1580 YE ADJ FOR EMPLOYEE INSURANCE FUND
#1581 YE ADJ FOR RISK MANAGEMENT FUND
#1582 YE DEPT ADJ'S FOR CAPITAL IMPROVEMENT FUND
#1583 YE ADJ FOR SALES TAX FUNDS
#1584 YE ADJJ FOR SINKING FUND
#1585 YE DEPT ADJ'S FOR UTILITY AUTHORITY FUND

Council Information / Action Requested

Your approval for Budget Amendment BA 2016-08 is requested.

City Staff Information / Action Follow-up, if Council authorizes this action:

The City Treasurer's office will install the amendment into our accounting software, ensure that all funds are still in balance and then close the fiscal year.

ATTACHMENTS:

Description	Type	Upload Date
BUDGET AMENDMENT BA 2016-08 FINAL	Cover Memo	8/25/2016

PACKET: 00248-BA 2016-08 FINAL
BUDGET CODE: CB-Current Budget

FUND ACCOUNT	DATE	DESCRIPTION	ADJUSTMENT	ORIGINAL BUDGET	PREVIOUS ADJUSTMENTS	NEW BUDGET	BUDGET BALANCE
Budget Adj. # 001579							
001 001-513.10-21	6/30/2016	TO CRCT DEPT YE BUD	50,000.00	1,400.00	700.00	52,100.00	12,788.05
SPECIAL PAY-LEAVE & BONUS ACCR							
DEPT: CITY ADMINISTRATION							
001 019-569.10-96	6/30/2016	TO CRCT DEPT YE BUD	50,000.00-	100,000.00	0.00	50,000.00	50,000.00
V,S, & H BUYBACK RESERVE							
DEPT: GENERAL GOVERNMENT							
001 004-516.30-78	6/30/2016	TO CRCT DEPT YE BUD	20,000.00	5,000.00	0.00	25,000.00	8,912.85-
EXTERNAL LEGAL SERVICES							
DEPT: LEGAL SERVICES-ATTORNEY							
001 007-517.10-11	6/30/2016	TO CRCT DEPT YE BUD	5,000.00	0.00	63,181.00	68,181.00	137.18-
SALARIES AND WAGES							
DEPT: FINANCE DEPARTMENT							
001 019-569.70-17	6/30/2016	TO CRCT DEPT YE BUD	25,000.00-	1,500,000.00	91,480.00-	1,328,520.00	1,328,520.00
FUND RESERVE							
DEPT: GENERAL GOVERNMENT							
001 012-536.50-81	6/30/2016	TO CRCT DEPT YE BUD	6,500.00	0.00	0.00	6,500.00	357.86
POOL CONCESSION							
DEPT: CITY SWIMMING POOL							
001 000-331.20-00	6/30/2016	TO CRCT DEPT YE BUD	6,500.00	0.00	0.00	6,500.00-	8,844.25
SWIMMING POOL CONCESSION							
Budget Adj. # 001580							
005 000-361.50-00	6/30/2016	EMP INS YE ADJ BA	500,000.00	0.00	0.00	500,000.00-	3,197.28
REIMB. AGGREGATE OR STOP LOSS							
005 000-364.27-00	6/30/2016	EMP INS YE ADJ BA	700,000.00	0.00	0.00	700,000.00-	0.00
TEMP. XFER FROM UA							
005 000-381.90-00	6/30/2016	EMP INS YE ADJ BA	50,000.00	1,299,612.00-	0.00	1,349,612.00-	1,049.04
CITY CONTRIBUTION							
005 000-381.91-00	6/30/2016	EMP INS YE ADJ BA	16,000.00	233,220.00-	0.00	249,220.00-	506.82
EMPLOYEE CONTRIBUTIONS							
005 066-569.20-14	6/30/2016	EMP INS YE ADJ BA	1,555,000.00	777,489.00	0.00	2,332,489.00	677.89
MEDICAL CLAIMS EXPENSE							
DEPT: EMPLOYEE HEALTH INS.							
005 066-569.20-16	6/30/2016	EMP INS YE ADJ BA	95,000.00	170,000.00	0.00	265,000.00	2,062.23
PRESCRIPTIONS CLAIMS EXPENSE							
DEPT: EMPLOYEE HEALTH INS.							

PACKET: 00248-BA 2016-08 FINAL
BUDGET CODE: CB-Current Budget

FUND ACCOUNT	DATE	DESCRIPTION	ADJUSTMENT	ORIGINAL BUDGET	PREVIOUS ADJUSTMENTS	NEW BUDGET	BUDGET BALANCE
Budget Adj. # 001580							
005 066-569.70-17 FUND RESERVE DEPT: EMPLOYEE HEALTH INS.	6/30/2016	EMP INS YE ADJ BA	384,000.00-	0.00	533,662.00	149,662.00	149,662.00
405 030-555.99-34 TEMP. XFER TO EMPL.INS.FUND DEPT: UTILITY GENERAL ADMIN.	6/30/2016	EMP INS YE ADJ BA	700,000.00	0.00	0.00	700,000.00	0.00
405 030-555.70-17 CONTINGENCY RESERVE DEPT: UTILITY GENERAL ADMIN.	6/30/2016	EMP INS YE ADJ BA	700,000.00-	1,573,904.00	162,281.00	920,961.00	920,961.00
Budget Adj. # 001581							
012 000-364.11-00 TRSF FROM GENERAL FUND	6/30/2016	RISK MGMT YE ADJ	55,000.00	0.00	0.00	55,000.00-	0.00
012 000-364.27-00 TRSF FROM UTILITY AUTHORITY	6/30/2016	RISK MGMT YE ADJ	55,000.00	0.00	0.00	55,000.00-	0.00
012 090-596.19-02 DISABILITY PAYMENTS DEPT: WORKERS' COMPENSATION	6/30/2016	RISK MGMT YE ADJ	110,000.00	200,000.00	0.00	310,000.00	26,478.49-
405 030-555.99-13 TRSF. TO RISK MGT. FUND DEPT: UTILITY GENERAL ADMIN.	6/30/2016	RISK MGMT YE ADJ	55,000.00	0.00	0.00	55,000.00	0.00
405 030-555.70-17 CONTINGENCY RESERVE DEPT: UTILITY GENERAL ADMIN.	6/30/2016	RISK MGMT YE ADJ	55,000.00-	1,573,904.00	162,281.00	920,961.00	920,961.00
001 019-569.99-13 XFER TO RISK MGMNT FUND DEPT: GENERAL GOVERNMENT	6/30/2016	RISK MGMT YE ADJ	55,000.00	0.00	0.00	55,000.00	0.00
001 019-569.70-17 FUND RESERVE DEPT: GENERAL GOVERNMENT	6/30/2016	RISK MGMT YE ADJ	55,000.00-	1,500,000.00	91,480.00-	1,328,520.00	1,328,520.00
Budget Adj. # 001582							
015 018-519.62-43 FY16 OHSO EM COMM TRLR EXP DEPT: CIVIL EMERGENCY MGMT.	6/30/2016	CAP IMP DEPT YE ADJ	105.00	0.00	17,840.00	17,945.00	2.60
015 072-522.61-02 FY14 2012 TRAIL GRANT MATCH DEPT: MULTI-SPORTS COMPLEX	6/30/2016	CAP IMP DEPT YE ADJ	1.00	239,310.00	3,931.00	243,242.00	0.76

PACKET: 00248-BA 2016-08 FINAL
BUDGET CODE: CB-Current Budget

FUND ACCOUNT	DATE	DESCRIPTION	ADJUSTMENT	ORIGINAL BUDGET	PREVIOUS ADJUSTMENTS	NEW BUDGET	BUDGET BALANCE
Budget Adj. # 001582							
015 019-569.61-99 FUND RESERVE DEPT: GENERAL GOVERNMENT	6/30/2016	CAP IMP DEPT YE ADJ	106.00-	440,532.00	136,276.00-	304,150.00	304,150.00
Budget Adj. # 001583							
105 000-311.10-00 SALES TAX REVENUE (1%)	6/30/2016	YE ADJ SALES TAX RE	132,100.00	3,449,007.00-	150,000.00-	3,431,107.00-	258.10-
105 038-518.99-16 TRSF TO CAPITAL IMPROVE. FUND DEPT: 1% REVENUE	6/30/2016	YE ADJ SALES TAX RE	132,100.00	377,599.00	286,022.00-	223,677.00	158,158.54-
650 000-311.20-00 5/8% EDU. USE TAX REVENUE	6/30/2016	YE ADJ SALES TAX RE	2,615.00	141,071.00-	0.00	143,686.00-	11,348.56
650 059-596.70-18 TRSF 5/8 SALES/USE TAX TO DISD DEPT: GEN. & DEBT SERVICE DEPT.	6/30/2016	YE ADJ SALES TAX RE	2,615.00	2,296,701.00	0.00	2,299,316.00	0.89
Budget Adj. # 001584							
210 048-528.90-95 INTEREST EXPENSE 2009B STRN DEPT: DCUA 2009B MISC NOTE	6/30/2016	SINK FUND YE ADJ	1,224.00	72,430.00	0.00	73,654.00	0.54
210 000-364.40-03 TRSF FROM DAA- TERMINAL DEBT	6/30/2016	SINK FUND YE ADJ	1,224.00	152,430.00-	0.00	153,654.00-	0.50-
210 051-528.90-95 INTEREST EXPENSE 2013 DEPT: DCUA 2013 MISC NOTE	6/30/2016	SINK FUND YE ADJ	540.00	60,797.00	0.00	61,337.00	0.49
210 000-361.10-15 INT. EARN. 2010 STRN FUB ACCTS	6/30/2016	SINK FUND YE ADJ	540.00	0.00	0.00	540.00-	2,009.72
206 065-503.99-17 TRSF TO UASF FOR TERMINAL DEBT DEPT: EAKER FIELD	6/30/2016	SINK FUND YE ADJ	1,224.00	152,430.00	0.00	153,654.00	0.50
206 000-364.27-00 TRSF. FROM DCUA -TERMINAL NOTE	6/30/2016	SINK FUND YE ADJ	1,224.00	152,430.00-	0.00	153,654.00-	0.50-
Budget Adj. # 001585							
405 024-565.10-14 FICA TAXES DEPT: PUBLIC WORKS ADMIN.	6/30/2016	DCUA YE ADJ	5,000.00	5,564.00	0.00	10,564.00	2,371.93

PACKET: 00248-BA 2016-08 FINAL
BUDGET CODE: CB-Current Budget

FUND ACCOUNT	DATE	DESCRIPTION	ADJUSTMENT	ORIGINAL BUDGET	PREVIOUS ADJUSTMENTS	NEW BUDGET	BUDGET BALANCE
Budget Adj. # 001585							
405 024-565.10-11 SALARIES AND WAGES DEPT: PUBLIC WORKS ADMIN.	6/30/2016	DCUA YE ADJ	21,000.00	72,727.00	0.00	93,727.00	1,155.59
405 024-565.10-21 SPECIAL PAY-LEAVE & BONUS ACCR DEPT: PUBLIC WORKS ADMIN.	6/30/2016	DCUA YE ADJ	15,000.00	700.00	0.00	15,700.00	503.77
405 025-550.10-11 SALARIES & WAGES DEPT: UTILITY BILLING	6/30/2016	DCUA YE ADJ	33,000.00	115,883.00	0.00	148,883.00	13,097.29
405 025-550.10-21 SPECIAL PAY-LEAVE & BONUS DEPT: UTILITY BILLING	6/30/2016	DCUA YE ADJ	13,000.00	1,050.00	0.00	14,050.00	388.33
405 030-555.10-21 SPECIAL PAY-LEAVE & BONUS DEPT: UTILITY GENERAL ADMIN.	6/30/2016	DCUA YE ADJ	28,000.00-	350.00	250,000.00	222,350.00	222,350.00
405 030-555.70-17 CONTINGENCY RESERVE DEPT: UTILITY GENERAL ADMIN.	6/30/2016	DCUA YE ADJ	60,224.00-	1,573,904.00	162,281.00	920,961.00	920,961.00
405 030-555.99-26 TRSF. TO AIRPORT AUTHORITY DEPT: UTILITY GENERAL ADMIN.	6/30/2016	DCUA YE ADJ	1,224.00	152,430.00	0.00	153,654.00	0.50

PACKET NOTES:
#1579 YE DEPT ADJ'S FOR GENERAL FUND
#1580 YE ADJ FOR EMPLOYEE INSURANCE FUND
#1581 YE ADJ FOR RISK MANAGEMENT FUND
#1582 YE DEPT ADJ'S FOR CAPITAL IMPROVEMENT FUND
#1583 YE ADJ FOR SALES TAX FUNDS
#1584 YE ADJJ FOR SINKING FUND
#1585 YE DEPT ADJ'S FOR UTILITY AUTHORITY FUND

TOTAL NO. ADJUSTMENTS--REVENUE:	12	1,520,203.00
TOTAL NO. ADJUSTMENTS--EXPENSE:	32	1,520,203.00
TOTAL IN PACKET--		3,040,406.00

*** BUDGET DEFICIT WARNINGS ***

FUND	ACCOUNT	NAME	BALANCE
001	004-516.30-78	EXTERNAL LEGAL SERVICES	8,912.85-

PACKET: 00248-BA 2016-08 FINAL
BUDGET CODE: CB-Current Budget

FUND	ACCOUNT	DATE	DESCRIPTION	ADJUSTMENT	ORIGINAL BUDGET	PREVIOUS ADJUSTMENTS	NEW BUDGET	BUDGET BALANCE
Budget Adj. # 001585								
001	007-517.10-11		SALARIES AND WAGES	137.18-				
012	090-596.19-02		DISABILITY PAYMENTS	26,478.49-				
105	038-518.99-16		TRSF TO CAPITAL IMPROVE. FUND	158,158.54-				

TOTAL WARNINGS: 4

*** NO ERRORS ***

*** END OF REPORT ***

Agenda Item: 1.k.

The City of Durant

Office of City Clerk

Memorandum

Date:	9/7/2016
To:	Mayor and City Council
From:	Cynthia J. Price, City Clerk
Re:	Consider Approval of Special Event Permit Application by Cub Scout Pack 615 for Cub Scout Mobile on September 17, 2016

This Special Event Permit Application was presented to Police Chief Houser, Fire Chief Joines, Street Department Superintendent James Young, and Solid Waste Collection Superintendent Albert Pierce for review and was unanimously recommended for approval.

Council Information / Action Requested

Approve Special Event Permit Application by Cub Scout Pack 615 for Cub Scout Mobile on September 17, 2016

City Staff Information / Action Follow-up, if Council authorizes this action:

City Clerk - Notify event organizer of council decision.

ATTACHMENTS:

Description	Type	Upload Date
SEP-2016-031 Application	Exhibit	9/9/2016

SEP No.: 2016-031

DURANT
· OKLAHOMA ·

Special Event Permit Application

Return Completed Application to City Clerk

♦City Hall Room 103♦300 W. Evergreen St.♦

PO Box 578 Durant, OK 74702

General Information

- Event organizers are required to register all public special events (outdoor festivals, walks/runs, parades, carnivals, tournaments, etc.) with the City of Durant.
- Organizers must submit the Special Event Permit Application form a ***minimum of 60 days prior*** to the event.
- Please do not assume that all aspects of the event will be approved. You may be asked to make some changes to your plan based on the availability of services and scheduling of other events.
- All applications must be signed. Those applications not signed will be considered incomplete and will not be processed. Upon approval of your event, you will receive written or electronic notification of confirmation.

Location

Name of Event: Cub Scout Mobile

Type of Event: ☐Run/Walk ☒Bicycle ☐Parade ☐Sporting Event ☐Tailgate Party ☐Festival

☐Motorcycle Ride ☐Concert ☐Wedding ☐Car Show ☐other:

Choose pre-designated Run/Walk route: ☐ Route 1 ☐Route 2 ☐Route 3 ☐N/A

Choose pre-designated Parade route: ☐ Route 1 ☐Route 2 ☐Route 3 ☐N/A

Location of Event: Carl Albert Park Address of Event:

Event located at a City facility or park? ☒ Yes ☐ No General public invited? ☐ Yes ☐ No

Sponsoring Organization

Organization/Group/Individual Name: Cub Scout Pack 615

Is organization Non-Profit or For-Profit? ☒Non-Profit ☐For-Profit

Primary Contact Person: Tony Lehrling Phone: 580-380-9274 Email: tlehrling@se.edu

Secondary Contact Person: Andrew Salas Phone: 580-380-4551 Email: Salasfamily@wildblue.net

Fundraiser? ☐ Yes ☒ No Organization to Benefit from Proceeds:

SEP No.: 2016-031

Event Summary

Set Up Date: 09/17/2016 | Set Up Time: 0800

Event Start Date: 09/17/2016 | Event Start Time: 0900

Event End Date: 09/17/2016 | Event End Time: 1200

Dismantle Date: 09/17/2016 | Dismantle Time: 1:00 PM

Expected Attendance: 45 | Admission/Registration Fee for public: None

Special arrangements necessary for:

Dumpsters ☐ Yes ☒ No | Detail:

Trash Receptacles ☐ Yes ☒ No | Detail:

Water Service ☐ Yes ☒ No | Detail:

Electrical Service ☐ Yes ☒ No | Detail:

Restroom Facilities ☐ Yes ☒ No | Detail:

Site Cleanup ☐ Yes ☒ No | Detail:

Food Sales/Service ☐ Yes ☒ No | Detail:

Beverage Sales/Service ☐ Yes ☒ No | Detail:

Will there be an event stage? ☐ Yes ☒ No | Will tents be used on-site? ☐ Yes ☒ No

Have adjacent property/business owners been notified? ☐ Yes ☒ No

Site Plan

☐Attach a site plan to the application. Application is not complete without a site plan.

- Outline of the entire event venue including the names of all streets or areas that are part of the venue and the surrounding area.
- If the event involves a moving route of any kind, indicate the direction of travel and all street or lane closures. Describe any kind of signage to be used.
- The location of fencing, barriers and/or barricades.
- The location of all stages, platforms, scaffolding, bleachers, grandstands, canopies, tents, portable toilets, booths, cooking areas, trash containers and dumpsters and any other temporary structures. Include source or provider for each one.
- Generator locations and/or source of electricity

SEP No.: 2016 - 031

Food/Beverage/Sales

Will there be sales associated with the event? ☐ Yes ☒ No

Are you charging vendors for participating or booths? ☐ Yes ☐ No If "yes", Amount?

Will alcoholic beverages or low point beer be served or sold at the event? ☐ Yes ☒ No

If "yes", check all that apply: ☐Free/Host alcohol ☐Sale of alcohol ☐Beer ☐Liquor ☐Beer & liquor

Did you obtain an alcohol license or permit? ☐ Yes ☒ No

Will food be prepared in the event area? ☐ Yes ☒ No

Have all county health department permits been obtained? ☐ Yes ☐ No

Note: Other permits from the City of Durant, Bryan County or State of Oklahoma may be required. Please review the section in the guidelines for additional information. An application to the Oklahoma Tax Commission for a special event permit at least twenty (20) days prior to the event is required per O.S. Title 68 Section 1364.2.

Traffic and Parking

Normal traffic flow to be disrupted? ☐ Yes ☒ No Street closing(s) requested? ☒ Yes ☐ No

Is there a need for traffic control from our Police Department? ☐ Yes ☒ No

Parking arrangements necessary? ☐ Yes ☒ No On-site parking control? ☐ Yes ☒ No

If **"yes"**, indicate the following on the attached site plan: proposed area detailing names of all streets, time frame involved, requested street closure(s), entry and exit for event traffic and/or pedestrian crossings, type of traffic control requested, and possible impact on traffic patterns. Describe how the route will be marked and the type of police service is needed (ie. front escort, rear escort, traffic control, security). Describe parking arrangements and/or on-site parking control.

Security/Medical

Will this event require Event Security? ☐ Yes ☒ No On-site Medical/First Aid care? ☐ Yes ☒ No

Will the event involve any type of fireworks or pyrotechnics? ☐ Yes ☒ No

Will there be any type of hazardous materials on-site during the event? ☐ Yes ☒ No

Will the event involve any type of firearms or replica firearms? ☐ Yes ☒ No

If **"yes"**, indicate the following on the attached site plan: description of proposed type of event security and list type of direct communication equipment to be used; outline of on-site medical/first aid care to be provided; details related to fireworks and/or pyrotechnics (including what will be utilized and by whom); and explain how firearms (replica or otherwise) are involved with the event. Attach material safety data sheets for any hazardous material on-site during the event. **Note**: the City of Durant may impose requirements for event security based on the type of event, anticipated crowds, location or other factors.

SEP No.: 2016-031

Assurance

I certify that the information contained in the foregoing application is true and correct to the best of my knowledge and belief that I have read, understand and agree to abide by the rules and regulations governing the proposed Special Event under the City of Durant Municipal Code. Host Organization will be responsible for any damages to city equipment or facilities. Applicant agrees to comply with all other requirements of the City, County, State and any other applicable entity which may pertain to the use of the Event venue and the conduct of the Event. In the event that a possessory interest subject to property taxation is created by virtue of this use permit, I agree to pay all possessory interest taxes and the City shall not be liable for the payment of such taxes. I further agree that the payment of any such taxes shall not reduce any consideration paid to the City pursuant to this use permit. I agree to abide by these rules, and further certify that I, on behalf of the Host Organization, am also authorized to commit that organization, and therefore agree to be financially responsible for any costs and fees that may be incurred by or on behalf of the Event to the City of Durant.

Street closings will require approved traffic control devices including barricades and signs. State Law requires that in most cases, state certified police officers must be used for traffic control on public streets **The cost to provide any services shall be paid in advance** including, but not limited to traffic control devices or services provided by the Durant Police Department.

Applicant Name: Tony Lehrling Application Date: 9/6/16 Click here to enter a date.

Applicant Signature: Tony Lehrling

Checklist

Thank you for completing your Special Event Permit Application. Before you submit your application to the City of Durant, please make sure that the following steps have been completed.

Have you?

- [x] Signed and dated your application
- [ ] Attached your event site plan including any applicable traffic, security, or parking plans
- [ ] Attached a list of your vendors and a copy of applicable health permits
- [ ] Attached a Certificate of Insurance
- [ ] Attached a copy of your IRS 501(c) tax exemption letter
- [ ] Included and attached any Bryan County, State, or City permits that may be required

Return Completed Application to DURANT CITY CLERK
♦City Hall Room 103♦300 W. Evergreen St.♦
PO Box 578 Durant, OK 74702

Reviewed: POLICE_____ FIRE _____ STREET_____ SANITATION_____

Approved: POLICE_____ FIRE _____ STREET_____ SANITATION_____

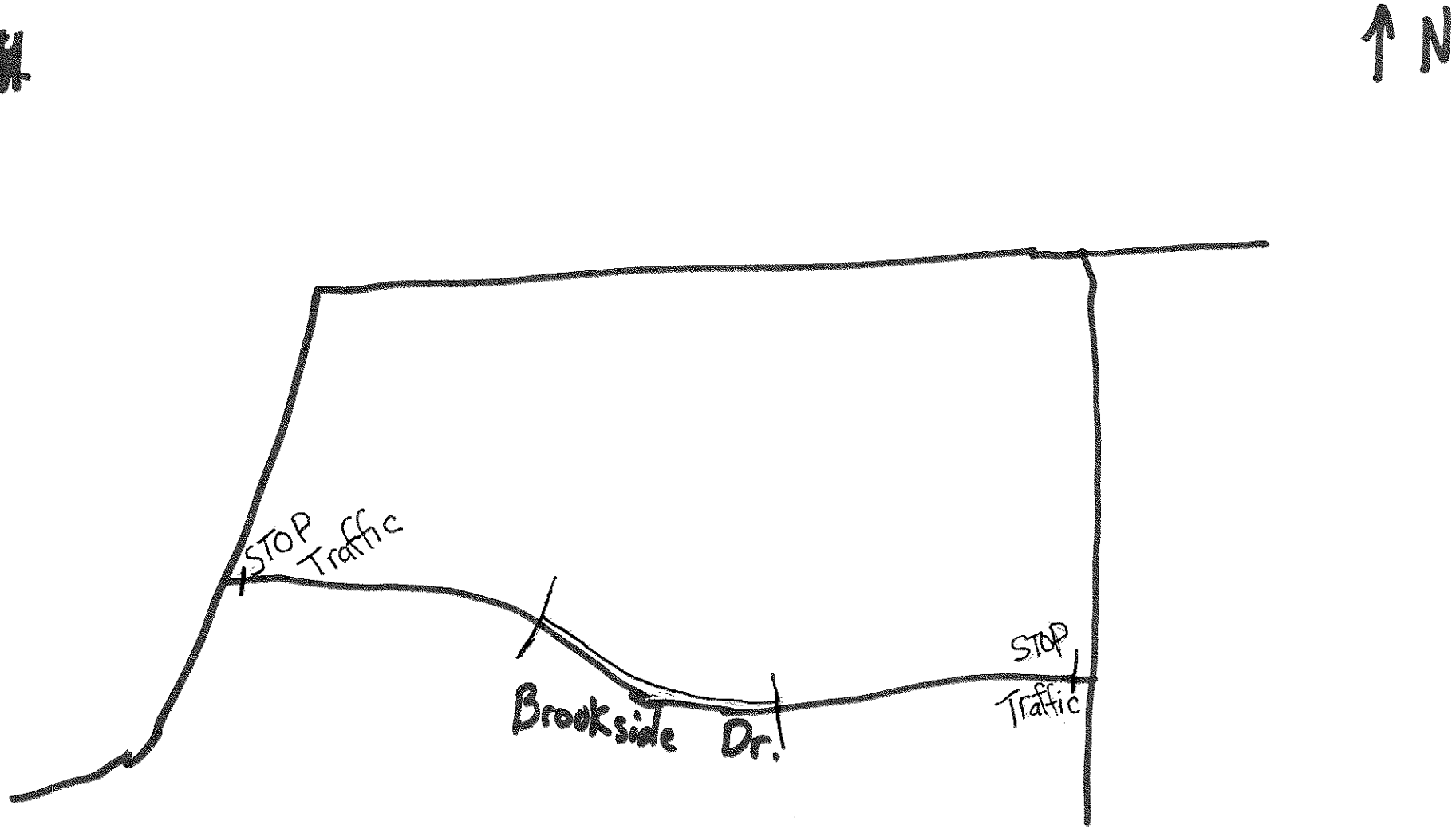

The park will be open to the public and we will using just the hill in the park

SEP-2016-031

Agenda Item: 1.I.

The City of Durant

Office of City Clerk

Memorandum

Date:	9/6/2016
To:	Mayor and City Council
From:	Cynthia J. Price, City Clerk
Re:	Consider Approval of Special Event Permit Application by Durant Main Street for Fall Carnival & Zombie Crawl on October 29, 2016

This application was presented for review by Police Chief David Houser, Fire Chief Roger Joines, Street Department Superintendent James Young, and Solid Waste Collection Superintendent Albert Pierce and received unanimous approval.

This event replaces the trick or treat event held in previous years that relied on participation by retailers in the downtown business district and returns it to a carnival venue.

Council Information / Action Requested

Approve Special Event Permit Application by Durant Main Street for Fall Carnival & Zombie Crawl on October 29, 2016.

City Staff Information / Action Follow-up, if Council authorizes this action:

City Clerk - Notify event organizers of council decision.

ATTACHMENTS:

Description	Type	Upload Date
Special Event Permit Application 2016-029	Exhibit	9/7/2016

SEP No.: 2016-029

DURANT
· OKLAHOMA ·

Special Event Permit Application

Return Completed Application to City Clerk

♦City Hall Room 103♦300 W. Evergreen St.♦

PO Box 578 Durant, OK 74702

General Information

- Event organizers are required to register all public special events (outdoor festivals, walks/runs, parades, carnivals, tournaments, etc.) with the City of Durant.
- Organizers must submit the Special Event Permit Application form a ***minimum of 60 days prior*** to the event.
- Please do not assume that all aspects of the event will be approved. You may be asked to make some changes to your plan based on the availability of services and scheduling of other events.
- All applications must be signed. Those applications not signed will be considered incomplete and will not be processed. Upon approval of your event, you will receive written or electronic notification of confirmation.

Location

Name of Event: Fall Carnival & Zombie Crawl

Type of Event: ☐Run/Walk ☐Bicycle ☐Parade ☐Sporting Event ☐Tailgate Party ☒Festival

☐Motorcycle Ride ☐Concert ☐Wedding ☐Car Show ☐other:

Choose pre-designated Run/Walk route: ☐ Route 1 ☐Route 2 ☐Route 3 ☒N/A

Choose pre-designated Parade route: ☐ Route 1 ☐Route 2 ☐Route 3 ☒N/A

Location of Event: Third Street (from Main to Beech) Address of Event:

Event located at a City facility or park? ☐ Yes ☒ No General public invited? ☒ Yes ☐ No

Sponsoring Organization

Organization/Group/Individual Name: Durant Main Street

Is organization Non-Profit or For-Profit? ☒Non-Profit ☐For-Profit

Primary Contact Person: Stephanie Gardner Phone: 924-1550 Email: manager@durantmainstreet.org

Secondary Contact Person: Erin McDaniel Phone: 924-8280 X2909 Email: emcdaniel@choctawnation.com

Fundraiser? ☒ Yes ☐ No Organization to Benefit from Proceeds: Durant Main Street

SEP No.:_____

Event Summary

Set Up Date: 10/29/16 Click here to enter a date.

Set Up Time: 6:00 AM

Event Start Date: 10/29/16 Click here to enter a date.

Event Start Time: 2:00 PM

Event End Date: Click here to enter a date.

Event End Time: 9:30 PM

Dismantle Date: Click here to enter a date.

Dismantle Time: 11:30 PM

Expected Attendance: 300

Admission/Registration Fee for public: No (Tickets for sale)

Special arrangements necessary for:

Dumpsters ☒ Yes ☐ No — Detail:

Trash Receptacles ☒ Yes ☐ No — Detail:

Water Service ☐ Yes ☒ No — Detail:

Electrical Service ☒ Yes ☐ No — Detail: power for carnival games

Restroom Facilities ☐ Yes ☒ No — Detail: we will rent porta-potties.

Site Cleanup ☐ Yes ☒ No — Detail:

Food Sales/Service ☒ Yes ☐ No — Detail: possible food vendors

Beverage Sales/Service ☐ Yes ☒ No — Detail:

Will there be an event stage? ☐ Yes ☒ No

Will tents be used on-site? ☒ Yes ☐ No

Have adjacent property/business owners been notified? ☐ Yes ☒ No

Some, but not all.

Site Plan

☒ Attach a site plan to the application. Application is not complete without a site plan.

- Outline of the entire event venue including the names of all streets or areas that are part of the venue and the surrounding area.
- If the event involves a moving route of any kind, indicate the direction of travel and all street or lane closures. Describe any kind of signage to be used.
- The location of fencing, barriers and/or barricades.
- The location of all stages, platforms, scaffolding, bleachers, grandstands, canopies, tents, portable toilets, booths, cooking areas, trash containers and dumpsters and any other temporary structures. Include source or provider for each one.
- Generator locations and/or source of electricity

SEP No.:_____

Food/Beverage/Sales

Will there be sales associated with the event? ☒ Yes ☐ No

Are you charging vendors for participating or booths? ☐ Yes ☒ No If "yes", Amount?

Will alcoholic beverages or low point beer be served or sold at the event? ☐ Yes ☒ No

If "yes", check all that apply: ☐Free/Host alcohol ☐Sale of alcohol ☐Beer ☐Liquor ☐Beer & liquor

Did you obtain an alcohol license or permit? ☐ Yes ☒ No

Will food be prepared in the event area? ☒ Yes ☐ No possible food vendors

Have all county health department permits been obtained? ☐ Yes ☐ No

Note: Other permits from the City of Durant, Bryan County or State of Oklahoma may be required. Please review the section in the guidelines for additional information. An application to the Oklahoma Tax Commission for a special event permit at least twenty (20) days prior to the event is required per O.S. Title 68 Section 1364.2.

Traffic and Parking

Normal traffic flow to be disrupted? ☒ Yes ☐ No Street closing(s) requested? ☒ Yes ☐ No

Is there a need for traffic control from our Police Department? ☐ Yes ☒ No

Parking arrangements necessary? ☐ Yes ☒ No On-site parking control? ☐ Yes ☒ No

If **"yes"**, indicate the following on the attached site plan: proposed area detailing names of all streets, time frame involved, requested street closure(s), entry and exit for event traffic and/or pedestrian crossings, type of traffic control requested, and possible impact on traffic patterns. Describe how the route will be marked and the type of police service is needed (ie. front escort, rear escort, traffic control, security). Describe parking arrangements and/or on-site parking control.

Security/Medical

Will this event require Event Security? ☒ Yes ☐ No On-site Medical/First Aid care? ☒ Yes ☐ No

Will the event involve any type of fireworks or pyrotechnics? ☐ Yes ☒ No

Will there be any type of hazardous materials on-site during the event? ☐ Yes ☒ No

Will the event involve any type of firearms or replica firearms? ☐ Yes ☒ No

If **"yes"**, indicate the following on the attached site plan: description of proposed type of event security and list type of direct communication equipment to be used; outline of on-site medical/first aid care to be provided; details related to fireworks and/or pyrotechnics (including what will be utilized and by whom); and explain how firearms (replica or otherwise) are involved with the event. Attach material safety data sheets for any hazardous material on-site during the event. **Note**: the City of Durant may impose requirements for event security based on the type of event, anticipated crowds, location or other factors.

SEP No.:_____

Assurance

I certify that the information contained in the foregoing application is true and correct to the best of my knowledge and belief that I have read, understand and agree to abide by the rules and regulations governing the proposed Special Event under the City of Durant Municipal Code. Host Organization will be responsible for any damages to city equipment or facilities. Applicant agrees to comply with all other requirements of the City, County, State and any other applicable entity which may pertain to the use of the Event venue and the conduct of the Event. In the event that a possessory interest subject to property taxation is created by virtue of this use permit, I agree to pay all possessory interest taxes and the City shall not be liable for the payment of such taxes. I further agree that the payment of any such taxes shall not reduce any consideration paid to the City pursuant to this use permit. I agree to abide by these rules, and further certify that I, on behalf of the Host Organization, am also authorized to commit that organization, and therefore agree to be financially responsible for any costs and fees that may be incurred by or on behalf of the Event to the City of Durant.

Street closings will require approved traffic control devices including barricades and signs. State Law requires that in most cases, state certified police officers must be used for traffic control on public streets **The cost to provide any services shall be paid in advance** including, but not limited to traffic control devices or services provided by the Durant Police Department.

Applicant Name: Application Date: Click here to enter a date.

Applicant Signature: Stephanie Gardner 8/25/16

Checklist

Thank you for completing your Special Event Permit Application. Before you submit your application to the City of Durant, please make sure that the following steps have been completed.

Have you?

- [x] Signed and dated your application
- [x] Attached your event site plan including any applicable traffic, security, or parking plans
- [ ] Attached a list of your vendors and a copy of applicable health permits N/A - no vendors yet
- [x] Attached a Certificate of Insurance
- [ ] Attached a copy of your IRS 501(c) tax exemption letter not tax exempt
- [ ] Included and attached any Bryan County, State, or City permits that may be required

Return Completed Application to DURANT CITY CLERK
♦City Hall Room 103♦300 W. Evergreen St.♦
PO Box 578 Durant, OK 74702

Reviewed: POLICE_____ FIRE _____ STREET_____ SANITATION_____

Approved: POLICE_____ FIRE _____ STREET_____ SANITATION_____

Durant Main Street
Fall Carnival & Zombie Crawl
Site Plan

- Third Street would be closed and barricaded from Main Street to Beech Street for the entire day of Saturday, October 29, 2016
- From Main Street to Evergreen Street will be carnival booths setup by local businesses and organizations. From Evergreen to Beech will be a zombie obstacle course.
- No general admission but carnival tickets will be sold to fundraise for Durant Main Street Christmas events, as well as entry fee for the Zombie Crawl Obstacle Course.
- Small tents may be used for individual booths but no large tent is planned.
- Power will be needed to operate small carnival games, inflatables for the Zombie Crawl, etc.

OP ID: 20

CERTIFICATE OF LIABILITY INSURANCE

DATE (MM/DD/YYYY) 06/08/2016

THIS CERTIFICATE IS ISSUED AS A MATTER OF INFORMATION ONLY AND CONFERS NO RIGHTS UPON THE CERTIFICATE HOLDER. THIS CERTIFICATE DOES NOT AFFIRMATIVELY OR NEGATIVELY AMEND, EXTEND OR ALTER THE COVERAGE AFFORDED BY THE POLICIES BELOW. THIS CERTIFICATE OF INSURANCE DOES NOT CONSTITUTE A CONTRACT BETWEEN THE ISSUING INSURER(S), AUTHORIZED REPRESENTATIVE OR PRODUCER, AND THE CERTIFICATE HOLDER.

IMPORTANT: If the certificate holder is an ADDITIONAL INSURED, the policy(ies) must be endorsed. If SUBROGATION IS WAIVED, subject to the terms and conditions of the policy, certain policies may require an endorsement. A statement on this certificate does not confer rights to the certificate holder in lieu of such endorsement(s).

PRODUCER
Jordan Hoefer Agency
Po Box 599
Durant, OK 74702
John E. Hoefer

CONTACT NAME: Julie Carney
PHONE (A/C, No, Ext): 580-924-1964 FAX (A/C, No): 580-924-4053
E-MAIL ADDRESS: julie@jordanhoefer.com
PRODUCER CUSTOMER ID #: DURA-17

INSURER(S) AFFORDING COVERAGE	NAIC #
INSURER A: Columbia Insurance Group	19640
INSURER B:	
INSURER C:	
INSURER D:	
INSURER E:	
INSURER F:	

INSURED
Durant Main Street
PO Box 928
Durant, OK 74702

COVERAGES CERTIFICATE NUMBER: REVISION NUMBER:

THIS IS TO CERTIFY THAT THE POLICIES OF INSURANCE LISTED BELOW HAVE BEEN ISSUED TO THE INSURED NAMED ABOVE FOR THE POLICY PERIOD INDICATED. NOTWITHSTANDING ANY REQUIREMENT, TERM OR CONDITION OF ANY CONTRACT OR OTHER DOCUMENT WITH RESPECT TO WHICH THIS CERTIFICATE MAY BE ISSUED OR MAY PERTAIN, THE INSURANCE AFFORDED BY THE POLICIES DESCRIBED HEREIN IS SUBJECT TO ALL THE TERMS, EXCLUSIONS AND CONDITIONS OF SUCH POLICIES. LIMITS SHOWN MAY HAVE BEEN REDUCED BY PAID CLAIMS.

INSR LTR	TYPE OF INSURANCE	ADDL INSR	SUBR WVD	POLICY NUMBER	POLICY EFF (MM/DD/YYYY)	POLICY EXP (MM/DD/YYYY)	LIMITS	
A	GENERAL LIABILITY X COMMERCIAL GENERAL LIABILITY CLAIMS-MADE X OCCUR GEN'L AGGREGATE LIMIT APPLIES PER: X POLICY PRO-JECT LOC			CMPOK23510	05/20/2016	05/20/2017	EACH OCCURRENCE	$ 2,000,000
							DAMAGE TO RENTED PREMISES (Ea occurrence)	$ 100,000
							MED EXP (Any one person)	$ 5,000
							PERSONAL & ADV INJURY	$ 1,000,000
							GENERAL AGGREGATE	$ 2,000,000
							PRODUCTS - COMP/OP AGG	$ 2,000,000
								$
	AUTOMOBILE LIABILITY ANY AUTO ALL OWNED AUTOS SCHEDULED AUTOS HIRED AUTOS NON-OWNED AUTOS						COMBINED SINGLE LIMIT (Ea accident)	$
							BODILY INJURY (Per person)	$
							BODILY INJURY (Per accident)	$
							PROPERTY DAMAGE (PER ACCIDENT)	$
								$
								$
	UMBRELLA LIAB OCCUR EXCESS LIAB CLAIMS-MADE DEDUCTIBLE RETENTION $						EACH OCCURRENCE	$
							AGGREGATE	$
								$
								$
	WORKERS COMPENSATION AND EMPLOYERS' LIABILITY ANY PROPRIETOR/PARTNER/EXECUTIVE OFFICER/MEMBER EXCLUDED? (Mandatory in NH) Y / N If yes, describe under DESCRIPTION OF OPERATIONS below	N/A						WC STATU-TORY LIMITS OTH-ER	
							E.L. EACH ACCIDENT	$
							E.L. DISEASE - EA EMPLOYEE	$
							E.L. DISEASE - POLICY LIMIT	$

DESCRIPTION OF OPERATIONS / LOCATIONS / VEHICLES (Attach ACORD 101, Additional Remarks Schedule, if more space is required)
Re: Farmers Market

CERTIFICATE HOLDER

First Texoma National Bank
220 Main St.
Durant, OK 74701

CANCELLATION

SHOULD ANY OF THE ABOVE DESCRIBED POLICIES BE CANCELLED BEFORE THE EXPIRATION DATE THEREOF, NOTICE WILL BE DELIVERED IN ACCORDANCE WITH THE POLICY PROVISIONS.

AUTHORIZED REPRESENTATIVE

© 1988-2009 ACORD CORPORATION. All rights reserved.

The ACORD name and logo are registered marks of ACORD

DURANT MAIN STREET
PO BOX 928
DURANT OK 74702

Date: MAY 20, 2016
Policy: CMPOK23510

POLICYHOLDER DISCLOSURE

NOTICE – OFFER OF TERRORISM INSURANCE COVERAGE

The Terrorism Risk Insurance Act (TRIA) established a program involving the Department of the Treasury and the insurance industry to assure the availability of property and casualty insurance protection against damages from Certified Acts of Terrorism. Generally speaking, Certified Acts of Terrorism are acts that exceed $5 million in aggregate losses to the insurance industry and which are subsequently declared by the U.S. Secretary of the Treasury as a certified terrorist act under the Terrorism Risk Insurance Act.

You should know that coverage provided by your policy for loss or damage for such Certified Acts of Terrorism is partially reimbursable by the United States Government. The federal share equals a percentage of terrorism losses insured under TRIA exceeding the insurance company's statutorily established deductible as set forth in the Act. The federal share will decrease by one percentage point annually as reflected in the following chart:

Calendar Year	Federal Share
2015	85%
2016	84%
2017	83%
2018	82%
2019	81%
2020	80%

Note, however, not all losses resulting from Certified Acts of Terrorism are covered, such as nuclear events. Please read your policy and endorsements carefully.

You should also know that the Terrorism Risk Insurance Act, as amended, contains a $100 billion cap that limits United States Government reimbursement, as well as insurers' liability for losses resulting from Certified Acts of Terrorism when the amount of such losses in any one calendar year exceeds $100 billion. If the aggregate insured losses for all insurers exceed $100 billion, your coverage may be reduced.

The premium charged for your policy includes a charge for the coverage of such Certified Acts of Terrorism under TRIA and this charge is specifically identified on the line entitled "Certified Terrorism Coverage" on the Declarations page(s) of your policy. You are, however, given the opportunity to reject this coverage by signing the rejection statement below and returning this form to us. Your policy will then be endorsed to exclude the described coverage and you will not be charged for this coverage.

REJECTION STATEMENT

I hereby reject the offer of terrorism coverage as defined in the Terrorism Risk Insurance Act.
I understand that an exclusion of such terrorism losses will be made part of this policy.

X _____ _____

Insured's Signature Date

NT-1 (1-15)

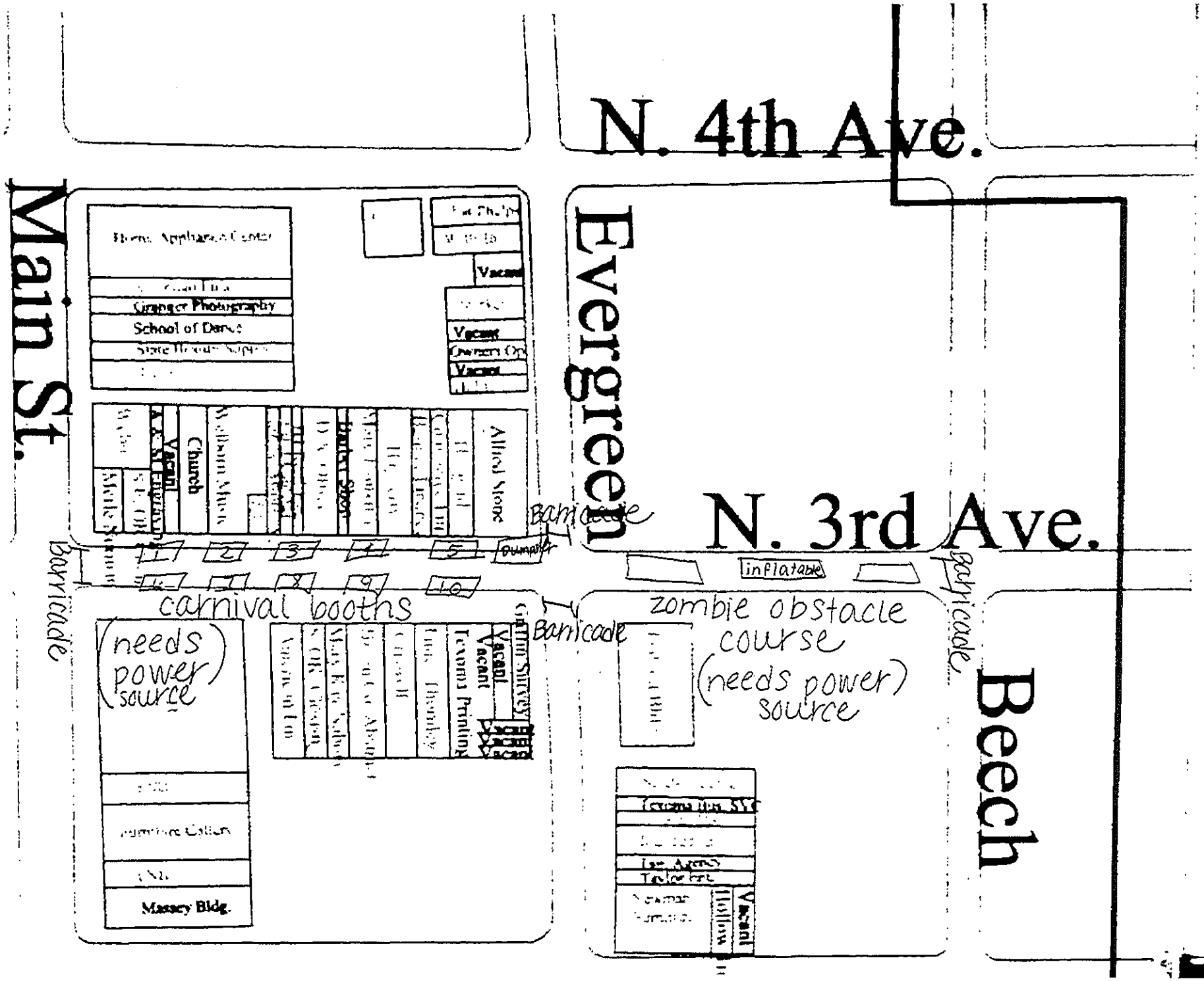
N. 4th Ave.
Main St.
Evergreen
N. 3rd Ave.
Beech
Stranger Photography
School of Dance
Vacant
Vacant
Vacant
Church
Allied Store
Barricade
Dumpster
Barricade
Barricade
Barricade
Inflatable
carnival booths
(needs power source)
Vacant
Vacant
Vacant
Vacant
Vacant
Masonry Bldg.
zombie obstacle course
(needs power source)
Vacant

Durant.org
Powered by Google

Cynthia Price <cprice@durant.org>

Fall Carnival & Zombie Crawl

1 message

Durant Main Street Director <manager@durantmainstreet.org> Mon, Aug 29, 2016 at 11:01 AM
To: Cynthia Price <cprice@durant.org>
Cc: "Erin E. McDaniel" <emcdaniel@choctawnation.com>

Hi Cindy-

I've sketched out the area we envision holding the carnival and zombie crawl. I show a dumpster placed at 3rd and Evergreen, but I'm open to suggestions on where they can be placed. Our needs are pretty minimal, beyond blocking off the street. We will need at least one power source on each block. If there are working plug-ins in the flowers beds, I can use those, but I know we have difficulty in keeping those in working order. Some of the carnival game booths will require electricity as well as the inflatables for the zombie obstacle course. We will supply our own porta-potties.

Let me know what other details I should include.

Thanks!
Stephanie
Stephanie Gardner, Executive Director
Durant Main Street
manager@durantmainstreet.org
580.924.1550

20160829111008118.pdf
60K

Agenda Item: 1.m.

The City of Durant

Durant/Bryan County Emergency Management

Memorandum

Date:	8/30/2016
To:	Mayor and City Council
From:	James Dalton, Director of Emergency Management Services
Re:	Consider Acceptance of Oklahoma Homeland Security Grant #750.065 for $4200 for Annual Broadwidth Service for the RDT 2 Communications Trailer

---

Council Information / Action Requested

Accept Oklahoma Homeland Security Grant #750.065 for $4200 for Annual Broadwidth Service for the RDT 2 Communications Trailer

City Staff Information / Action Follow-up, if Council authorizes this action:

ATTACHMENTS:

Description	Type	Upload Date
Oklahoma Homeland Security Grant #750.065 for $4200. for annual Broadband Service for the RDT 2 Communications Trailer	Cover Memo	8/30/2016

The City of Durant
Office of Emergency Management

DURANT
· OKLAHOMA ·

Memorandum

Date: August 11, 2016

To: Mayor and City Council

From: James Dalton, Emergency Management Director

Re: Accept Grant # 750.065 for Durant / Bryan County Emergency Management from Oklahoma Office of Homeland Security for Annual Satellite Bandwidth Service for the Regional Deployment Communications Trailer # 2.

Council Information / Action Requested

- Request the Mayor and Council to allow Durant / Bryan County Emergency Management to accept a $4,200. Annual Satellite Bandwidth Service Grant # 750.065 from the Oklahoma Office of Homeland Security for the City of Durant Regional Deployment Communications Trailer # 2. This Annual Satellite Bandwidth Service Grant is a 100% grant that requires no match by the City of Durant. The purpose of grant # 750.065 is to provide Satellite Uplink Communications Service to the Durant Regional Deployment Communications Trailer for the period August 2015 – August 2017.
- Grant # 750.065 is in support of the Durant Regional Deployment Communications Trailer Grant # 450.062 that was an Oklahoma Office of Homeland Security grant that was originally awarded to the City on August 5, 2014 in the amount of $178,861. **NOTE:** We have received this grant for multiple years in the past.
- All actions should take no more than 5 minutes.

City Staff Information / Action Follow-up

- I, James Dalton, will submit the proper grant documentation between the Oklahoma Office of Homeland Security and the City of Durant to attain the grant.
- I, James Dalton will have the Durant Regional Deployment Communications Trailer available for inspection by the Oklahoma Office of Homeland Security to insure that the asset is in compliance with the standards set forth in the grant agreement.
- I, James Dalton, will verify with the Clerk's Office that the grant funding has been received and deposited.
- I, James Dalton, will maintain the information to comply with any audit request.

Oklahoma Office of
Homeland Security
Prevent, Protect, Prepare

GRANT PROGRAM
Sub-Recipient Award Terms and Conditions

Instructions:
The Authorized Official must sign the following required documents and return to our office. Please keep a copy of ALL documents for your records.

1. **OKOHS Memorandum, Schedule "A".** (***SIGNATURE REQUIRED***)
2. **Sub-recipient Award Document, Schedule "B".** (***SIGNATURE REQUIRED***)
3. **Sub-recipient Terms and Conditions, Schedule "1".** (***SIGNATURE REQUIRED, RETURN ONLY PAGE 11***)
4. **Authorization to Sign OKOHS Program Documents, Schedule "3".** (***SIGNATURES REQUIRED)***
5. **Quarterly Status Report, Schedule "4".** (***SIGNATURE NOT REQUIRED AT THIS TIME.*** This form is included for grant your convenience only. Report due within 15 days following each calendar quarter.)

KIM EDD CARTER
DIRECTOR

MARY FALLIN
GOVERNOR

STATE OF OKLAHOMA
OFFICE OF HOMELAND SECURITY

TO: City of Durant
Stewart Hoffman, Mayor
FROM: Kim Edd Carter, Director KEC
DATE: August 5, 2016
RE: Oklahoma Office of Homeland Security 2015 Homeland Security Grant Program; Rapid Deployable Communications Trailer Bandwidth Service; # 750.065

Your agency has been selected to receive $4,200.00, (the Proposed Award), pursuant to the Oklahoma Office of Homeland Security (OKOHS) fiscal year 2015 Homeland Security Grant Program (the 2015 Program). Among other initiatives, the 2015 Program provides this funding for the purchase of bandwidth service for the Rapid Deployable Communications Trailer.

In order to facilitate the expeditious acquisition of the bandwidth service (the Equipment), the City of Durant hereby assigns the $4,200.00 to the State of Oklahoma, specifically the Oklahoma Department of Public Safety (DPS) and OKOHS, to purchase the Equipment, which will be delivered and titled directly to the City of Durant. We agree to accept title to the Equipment and acknowledge that use of the Equipment is subject to the terms and conditions of the 2015 Program, including but not limited to the requirement to maintain an accurate inventory of the Equipment.

The 2015 Program is a federally funded grant using money provided to the State of Oklahoma as a part of the FY 2015 (FEMA/DHS) Homeland Security Grant Program. Like previous FEMA/DHS/OKOHS grant programs, the 2015 Program is a reimbursement grant.
The process requires the following actions (Note 2-5 apply to DPS/OKOHS):

(1) Acceptance of the terms and conditions of the 2015 Program including but not limited to those noted on the attached *Schedule "1"*;
(2) Submission of a Budget Detail Worksheet (BDW) to OKOHS with a list of estimated costs of specific allowable items;
(3) Receipt of an approval letter from OKOHS with a schedule of approved items. You must have this ***OKOHS APPROVAL LETTER IN HAND PRIOR TO EXPENDING FUNDS***;
(4) After your receipt of the OKOHS Approval Letter, you may purchase approved items in an amount not to exceed the amount of the Proposed Award; and
(5) Upon receipt of the purchased items, you will need to submit a Reimbursement Request Form, copies of the associated invoices and purchase orders to OKOHS. (Copies of the Reimbursement Request Form and the BDW are available on the OKOHS website at www.homelandsecurity.ok.gov).
(6) After your payment to the vendor has been processed you will need to submit a copy of the cancelled check and an inventory form to OKOHS.

P.O. Box 11415 Oklahoma City, OK 73136-0415 PHONE 405/ 425-7296 FAX 405/ 425-7295 www.homelandsecurity.ok.gov

Reimbursement checks are generally mailed to sub grantees by OKOHS within 30 days of receipt of the signed Reimbursement Request Form and associated invoices. If this process will cause a significant hardship, please contact OKOHS for further guidance.

If your organization is willing to accept the Proposed Award subject to all the terms and conditions of the 2015 Program, please so indicate by: (1) affixing the signature of the appropriate chief executive officer (i.e. the chair of the county commissioners, the mayor, the agency director, or the city manager) in the space provided below; and (2) returning an original fully executed copy of this letter and each document listed on *Schedule "1"* (each of which is included with this award packet) to OKOHS **ON OR BEFORE August 26, 2016** Post Office Box 11415, Oklahoma City, Oklahoma 73136.0415.

Should you have questions or need additional assistance contact Robbie Foster at 405-425-7510 or by e-mail at robbie.foster@okohs.ok.gov or Christina Daron at 405-425-7591 or by email at christina.daron@okohs.ok.gov.

Thank you for your willingness to participate in this important initiative. We appreciate your efforts to protect our citizens and we look forward to working with you.

Agreed and accepted this ___ day of _____ 2016:

Government/Agency Name: City of Durant - Department of Emergency Management

Signature: _____

Printed Name: Stewart Hoffman

Title: Mayor

Oklahoma Office of
Homeland Security
Prevent, Protect, Prepare

P.O. Box 11415
Oklahoma City, OK 73136
(405) 425-7296 Office (405) 425-7295 Fax
www.homelandsecurity.ok.gov

SUB-GRANTEE AWARD

Sub-grantee – Required for Reimbursement **FEI#** 736005186 **DUNS #** 010473114	**Original Award Amount** **$4,200.00**
City of Durant **Stewart Hoffman, Mayor** **300 W. Evergreen** **Durant, OK 74701**	**Award Number** **#750.065** **Award Effective Date** **8/11/2015** **Project Period** **9/1/2015 – 8/31/2017**
Project Title/IJ Homeland Security Grant Program Rapid Deployable Communications Trailer Bandwidth Service/IJ #5	**CFDA** **97.073** **(OKOHS # 97.073 - 6100)**

Applicable Funds	Region	County
Homeland Security Grant Program **FY 2015** (SHSP - Local)	**5**	**Bryan**

Method of Payment: **This is a Reimbursement Grant.**	**Is Sub-Grantee NIMS Compliant?** (Please Check One) **YES** ☒ **NO** ☐
Agency/Jurisdiction Chief Executive Officer Information-Primary Authorized Official City or County Official (Mayor, City Manager, County Commissioner)	**Project Contact/ Secondary Authorized Official** **(If Applicable)**
Title of Primary Authorized Official Mayor	Title of Secondary Authorized Official Durant/Bryan County Emergency Mgt. Director
Name Stewart Hoffman	Name James Dalton
Telephone 580-931-6605 / Fax 580-924-3490	Telephone 580-924-3361 / Fax 580-924-8360
Email shoffman@durant.org	Email jdalton@durant.org
Signature of Primary Authorized Official: **(Required)** Date	Signature of Secondary Authorized Official: **(Required)** Date

The Primary Authorized Official certifies:

- Legal authorization to accept grants on behalf of the named governmental entity.
- Proposed project can be completed by August 31, 2017
- Sub-Grantee will comply with all laws, regulations, statutes, assurances, certifications, and other requirements referenced in Schedules A, B and C (if applicable) and Schedules 1-5 (if applicable) each of which is attached hereto.
- All submitted data is true and correct to the best of signatory's knowledge.

Special Conditions

OKOHS Approving Official **Kim Edd Carter** **Director**	**OKOHS Contact Information** Oklahoma Office of Homeland Security P.O. Box 11415 Oklahoma City, OK 73136-0415	
Signature of OKOHS Approving Official	Telephone (405) 425-7296	Fax (405) 425-7295

Homeland Security Grant Program Terms and Conditions

Recipients of Oklahoma Office of Homeland Security ("OKOHS")/Department of Homeland Security ("DHS")-Federal Emergency Management Administration ("FEMA") grant funds ("Sub-recipient(s)") are urged to carefully review and understand all terms and conditions of the award prior to award acceptance. Failure to comply with these terms and conditions may result in disallowance of costs and recovery of funds and/or suspension or termination of funds and/or award.

As a condition of receipt of this grant, the Sub-recipient understands and agrees:

1. **Acknowledgement of Federal Funding from DHS (Article III):** All recipients must acknowledge their use of federal funding when issuing statements, press releases, request for proposals, bid invitations, and other documents describing projects or programs funded in whole or in part with Federal funds.

2. **Activities Conducted Abroad (Article IV):** All recipients must ensure that project activities carried on outside the United States are coordinated as necessary with appropriate government authorities and that appropriate licenses, permits, or approvals are obtained.

3. **Age Discrimination Act of 1975 (Article V):** All recipients must comply with the requirements of the Age Discrimination Act of 1975 (42 U.S.C. § 6101 et seq.), which prohibits discrimination on the basis of age in any program or activity receiving Federal financial assistance.

4. **Allowable Costs:** The recipient agrees that all allocations and use of funds under this grant will be in accordance with the Notice of Funding Opportunity (NOFO).

   OKOHS requires that Costs charged to this project are subject to advance written approval by OKOHS.

   OKOHS requires that only food and beverages **approved in writing** by OKOHS in advance will be permitted to be purchased with DHS/FEMA funds. As a general rule, FEMA and OKOHS discourage the use of federal funding for food and beverages. While there may be limited exceptions made to this rule that apply solely to working lunches, a strict reasonableness standard must be maintained.

   OKOHS requires that use of DHS/FEMA funding to pay for speaker fees **must be approved in writing** by OKOHS in advance any time the speaker is paid in excess of $100 per hour for services.

5. **Americans with Disabilities Act of 1990 (ADA) (Article VI):** All recipients must comply with the requirements of Titles I, II, and III of the Americans with Disabilities Act, which prohibits recipients from discriminating on the basis of disability in the operation of public entities, public and private transportation systems, places of public accommodation, and certain testing entities (42 U.S.C. §§ 12101–12213).

6. **Assurances, Administrative requirements and Cost Principals (Article II):** The administrative, cost principles, and audit requirements that apply to DHS award recipients originate from 2 C.F.R. Part 200, Uniform Administrative Requirement, Cost Principles, and Audit Requirements for Federal Awards, as adopted by DHS at 2 C.F.R. Part 3002.

7. **Audit Requirements:** The Sub-recipient agrees to comply with the requirements of the 2 C.F.R. Part 200 Section F.

   Entities that expend $750,000 or more in Federal funds (from all sources) in a fiscal year require an organization-wide financial and compliance audit report. The audit must be performed in accordance with the Government Accountability Office Government Auditing Standards, Audits of States, Local Governments, and Non-Profit Organizations. Sub-recipients are required to submit to OKOHS (within 90 days of completion) a copy of any audit report received by Sub-recipient in connection with any audit performed by or as a requirement of any regulatory body (federal, state or local) that is conducted with respect to activity taking place during the term of the OKOHS/DHS/FEMA Award. OKOHS will review the audit and determine if any findings exist which may impact the ability of the Sub-recipient to continue to receive funds pursuant to this grant or future funding opportunities.

8. **Best Practices for Collection and Use of Personally Identifiable Information (PII)(Article VII):** All award recipients who collect PII are required to have a publically-available privacy policy that describes what PII they collect, how they use the PII, whether they share PII with third parties, and how individuals may have their PII corrected where appropriate. Award recipients may also find as a useful resource the DHS Privacy Impact Assessments: http://www.dhs.gov/xlibrary/assets/privacy/privacy_pia_guidance_june2010.pdf and http://www.dhs.gov/xlibrary/assets/privacy/privacy_pia_template.pdf, respectively.

9. **Civil Rights Act of 1968 (Article XI):** All recipients must comply with Title VIII of the Civil Rights Act of 1968, which prohibits recipients from discriminating in the sale, rental, financing, and advertising of dwellings, or in the provision of services in connection therewith, on the basis of race, color, national origin, religion, disability, familial status, and sex (42 U.S.C. § 3601 et seq.), as implemented by the Department of Housing and Urban Development at 24 CFR Part 100. The prohibition on disability discrimination includes the requirement that new multifamily housing with four or more dwelling units—i.e., the public and common use areas and individual apartment units (all units in buildings with elevators and ground-floor units in buildings without elevators)—be designed and constructed with certain accessible features (see 24 CFR § 100.201).

10. **Community Emergency Response Team (CERT) Training:** That any CERT training funded with OKOHS/FEMA grant funds will be conducted by OKOHS approved trainers.

11. **Compliance Agreement:** The Sub-recipient agrees to abide by all Terms and Conditions including "Special Conditions" placed upon the grant award by OKOHS. Failure to comply could result in a "Stop Payment" being placed on the grant.

12. **Commingling of Funds:** The Sub-recipient is prohibited from commingling funds on either a program-by-program or a project-by-project basis without prior written approval of OKOHS and DHS/FEMA. The accounting systems of all Sub-recipients must ensure that agency funds are not commingled with funds from other awards or Federal agencies. Each award must be accounted for separately.

13. **Confidential Information:** Any reports, information, data, etc., given to, prepared or assembled by the Sub-recipient under this grant, which OKOHS requests to be kept confidential, shall not be made available to any individual or organization by the Sub-recipient without prior written approval of OKOHS.

14. **Conflict Of Interest:** Sub-recipients should take every precaution to avoid the appearance of a conflict of interest. Violations of the conflict of interest standards may result in criminal, civil, or administrative penalties. In the use of agency project funds, officials or employees of State or local units of government shall avoid any action that might result in, or create the appearance of:

    - Using his or her official position for private gain;
    - Giving preferential treatment to any person;
    - Losing complete independence or impartiality;
    - Making an official decision outside official channels; or
    - Affecting adversely the confidence of the public in the integrity of the government or the program. For example, where a Sub-recipient of federal funds makes sub-awards under any competitive process and an actual conflict or an appearance of a conflict of interest exists, the person for whom the actual or apparent conflict of interest exists should recuse himself or herself not only from reviewing the application for which the conflict exists, but also from the evaluation of all competing applications.

15. **Contract Provisions for Non-federal Entity Contracts under Federal Awards (Article XXV):**

    a. Contracts for more than the simplified acquisition threshold set at $150,000. All recipients who have contracts exceeding the acquisition threshold currently set at $150,000, which is the inflation adjusted amount determined by Civilian Agency Acquisition Council and the Defense Acquisition Regulation Council as authorized by 41 U.S.C. §1908, must address administrative, contractual, or legal remedies in instance where contractors violate or breach contract terms and provide for such sanctions and penalties as appropriate.

    b. Contracts in excess of $10,000. All recipients that have contracts exceeding $10,000 must address termination for cause and for convenience by the non-Federal entity including the manner by which it will be effected and the basis for settlement.

16. **Copyright (Article X):** All recipients must affix the applicable copyright notices of 17 U.S.C. § 401 or 402 and an acknowledgement of Government sponsorship (including award number) to any work first produced under Federal financial

assistance awards, unless the work includes any information that is otherwise controlled by the Government (e.g., classified information or other information subject to national security or export control laws or regulations).

17. **Data Universal Numbering System (DUNS) Numbers:** The Sub-recipient will obtain a Data Universal Numbering System (DUNS) Number (a nine digit number established and assigned by Dun and Bradstreet, Inc. (D&B) to uniquely identify business entities) for its organization and provide that number to OKOHS as a precondition of funding reimbursement under the grant. A DUNS number may be obtained from D&B by telephone (currently 866.705.5711) or via the Internet at http://fedgov.dnb.com/webform.

18. **Debarment and Suspension (Article XI):** All recipients must comply with Executive Orders 12549 and 12689, which provide protection against waste, fraud and abuse by debarring or suspending those persons deemed irresponsible in their dealings with the Federal government. **See Schedule 2**

19. **DHS Seals, Logo, and Flags (Article XXXIII):** All recipients must obtain DHS's approval prior to using the DHS seal(s), logos, crests or reproductions of flags or likenesses of DHS agency officials, including use of the United States Coast Guard seal, logo crests or reproduction of flags or likenesses of Coast Guard officials.

20. **DHS Specific Acknowledgements and Assurances (Article XXXV):** All recipients must acknowledge and agree—and require any sub-recipients, contractors, successors, transferees, and assignees acknowledge and agree—to comply with applicable provisions governing DHS access to records, accounts, documents, information, facilities, and staff.

    1. Recipients must cooperate with any compliance review or complaint investigation conducted by DHS.

    2. Recipients must give DHS access to and the right to examine and copy records, accounts, and other documents and sources of information related to the grant and permit access to facilities, personnel, and other individuals and information as may be necessary, as required by DHS regulations and other applicable laws or program guidance.

    3. Recipients must submit timely, complete, and accurate reports to the appropriate DHS officials and maintain appropriate backup documentation to support the reports.

    4. Recipients must comply with all other special reporting, data collection, and evaluation requirements, as prescribed by law or detailed in program guidance.

    5. If, during the past three years, the recipient has been accused of discrimination on the grounds of race, color, national origin (including limited English proficiency), sex, age, disability, religion, or familial status, the recipient must provide a list of all such proceedings, pending or completed, including outcome and copies of settlement agreements to the DHS awarding office and the DHS Office of Civil Rights and Civil Liberties.

    6. In the event any court or administrative agency makes a finding of discrimination on grounds of race, color, national origin (including limited English proficiency), sex, age, disability, religion, or familial status against the recipient, or the recipient settles a case or matter alleging such discrimination, recipients must forward a copy of the complaint and findings to the DHS Component and/or awarding office.

    The United States has the right to seek judicial enforcement of these obligations.

21. **Disposition of Equipment Acquired Under the Federal Award (Article XXXVIII):** When original or replacement equipment acquired under this award by the recipient or its sub-recipients no longer needed for the original project or program or for other activities currently or previously supported by DHS/FEMA, you must request instructions form DHS/FEMA to make proper disposition of the equipment pursuant to 2 C.F.R § 200.313.

22. **Drug-Free Workplace Regulations (Article XII):** All recipients must comply with the Drug-Free Workplace Act of 1988 (41 U.S.C. § 701 et seq.), which adopted at 2 C.F.R. 3001, which requires that all organizations receiving grants from any Federal agency agree to maintain a drug-free workplace. DHS has adopted the Act's implementing regulations at 2 C.F.R. 3001. **See Schedule 2**

23. **Duplication of Benefits (Article XIII):** Any cost allocable to a particular Federal award provided for in 2 C.F.R. Part 200, Subpart E may not be charged to other Federal awards to overcome fund deficiencies, to avoid restrictions imposed by Federal statutes, regulations, or terms and conditions of the Federal awards, or for other reasons. However, this prohibition

would not preclude the non-Federal entity from shifting costs that are allowable under two or more Federal awards in accordance with existing Federal statutes, regulations, or the terms and conditions of the Federal awards.

24. **Energy Policy and Conservation Act (Article XIV):** All recipients must comply with the requirements of 42 U.S.C. § 6201 which contain policies relating to energy efficiency that are defined in the state energy conservation plan issues in compliance with this Act.

25. **Environmental and Historic Preservation (EHP):** The Sub-recipient shall comply with all applicable Federal, State, and local environment and historic preservation (EHP) requirements and shall provide any information requested by FEMA to ensure compliance with applicable laws including: National Environmental Policy Act, National Historic Preservation Act, Endangered Species Act, and Executive Orders on Floodplains (11988), Wetlands (11990) and Environmental Justice (12898). Sub-recipient shall not undertake any project having the potential to impact EHP resources without the prior approval of FEMA's EHP division, including but not limited to communications towers, physical security enhancements, new construction, modifications to buildings, ground distrubance, and the purchase and use of sonar equipment. Sub-recipients should submit the FEMA EHP Screening Form for each project as soon as possible following receipt of their grant award. Any construction activities that have been initiated prior to the full environmental and historic preservation review could result in a non-compliance finding. Failure of the Sub-recipient to meet Federal, State, and local EHP requirements and obtain applicable permits may jeopardize Federal funding.

26. **Equipment:** Only equipment that is **approved in writing** by OKOHS will be permitted to be purchased with DHS/FEMA funds. As a general rule, equipment purchased with OKOHS funding must be allowable for the respective grant program funds to be used in accordance with DHS's "Authorized Equipment List".

    When practicable, any equipment purchased with grant funding shall be prominently marked as follows: "Purchased with funding from the Oklahoma Office of Homeland Security with funds provided by the U.S. Department of Homeland Security." Please contact OKOHS when equipment is received to request appropriate labels.

    Personnel must be properly trained to use the equipment purchased under this grant program in accordance with all applicable federal, state and local laws including, but not limited to regulations established by EPA, OSHA, and NFPA By signing and submitting grant acceptance documents, the authorized official certifies employees have received or will receive required training prior to utilizing equipment purchased with OKOHS/FEMA funding.

    To be responsible for replacing or repairing equipment that is lost, stolen, damaged, or destroyed as a result of Sub-recipient's willful or negligent action. Property with a cost in excess of $10,000 that is purchased using OKOHS/DHS/FEMA funding must be insured for casualty loss unless a written exception to this requirement is permitted by OKOHS. Property losses should be reported to OKOHS immediately.

    To maintain a state of readiness for equipment and personnel to respond to a terrorist incident.

27. **Exercises:** Any exercise conducted with OKOHS grant funds must comply with Homeland Security Exercise and Evaluation Program (HSEEP) and Nation Incident Management System (NIMS) requirements. These requirements can be found at http://www.fema.gov/media-library-data/20130726-1914-25045-8890/hseep_apr13_.pdf. Exercise documentation, including but not limited to: objectives, after-action reports, and participants, must be coordinated with and submitted to the OKOHS Training and Exercise Coordinator.

28. **False Claims Act and Program Fraud Civil Remedies (Article XVI):** All recipients must comply with the requirements of 31 U.S.C. § 3729 which set forth that no recipients of federal payments shall submit a false claim for payment. See also 38 U.S.C. § 3801-3812 which details the administrative remedies for false claims and statements made.

29. **Federal Debt Status (Article XVII):** All recipients are required to be non-delinquent in their repayment of any Federal debt. Examples of relevant debt include delinquent payroll and other taxes, audit disallowances, and benefit overpayments. See OMB Circular A-129 and form SF-424B, item number 17 for additional information and guidance.

30. **Financial Guidelines:** The Sub-recipient shall comply with the most recent version of the Administrative Requirements, Cost Principles, and Audit Requirements.

31. **Fly America Act of 1974 (Article XVIII):** All recipients must comply with Preference for U.S. Flag Air Carriers: (air carriers holding certificates under 49 U.S.C. § 41102) for international air transportation of people and property to the extent

that such service is available, in accordance with the International Air Transportation Fair Competitive Practices Act of 1974 (49 U.S.C. § 40118) and the interpretative guidelines issued by the Comptroller General of the United States in the March 31, 1981, amendment to Comptroller General Decision B138942.

32. **Fusion Center:** The Sub-recipient agrees that any funds utilized to establish or enhance state and local fusion centers must support the development of a statewide fusion process that corresponds with the Global Justice/Homeland Security Advisory Council (HSAC) Fusion Center Guidelines and achievement of a baseline level of capability as defined by the Fusion Capability Planning Tool.

    The Sub-recipient agrees that Homeland Security Information Network (HSIN) must serve as the primary vehicle by which information /intelligence is shared with DHS/FEMA as part of the fusion process across the Federal, State, local, regional, tribal and private sectors. All statewide information sharing and analysis centers utilizing HSGP funds must establish connectivity with the DHS/FEMA Homeland Security Operations Center (HSOC) via the HSIN to comply with FEMA policy legislation as outlined in the Program Guidance.

33. **Hotel and Motel Fire Safety Act of 1990 (Article XIV):** In accordance with Section 6 of the Hotel and Motel Fire Safety Act of 1990, 15 U.S.C. §2225(a), all recipients must ensure that all conference, meeting, convention, or training space funded in whole or in part with Federal funds complies with the fire prevention and control guidelines of the Federal Fire Prevention and Control Act of 1974, as amended, 15 U.S.C. §2225.

34. **Interest and Other Program Income:** The applicant agrees to be accountable for all interest or other income earned by the Sub-recipient with respect to sub-recipient funds or as a result of conduct of the project (sale of publications, registration fees, service charges, etc.) All program income generated by this grant during the project must be reported to OKOHS quarterly and must be put back into the project or be used to reduce the Grantor participation in the program. The use or planned use of all program income must have prior written approval from OKOHS.

35. **Interoperable Equipment:** That interoperability of equipment and establishment of multi-regional mutual aid is strongly encouraged and in some cases may be mandated by OKOHS.

    ***Interoperable Communications (IOC) equipment must comply with OKOHS state minimum standards (see** http://www.ok.gov/homeland/Interoperable_Communications/Minimum_Standards_for_Communication_Equipment_Purchases/index.html**)**

36. **Inventory:** During the term of this grant and for three years following termination of the OKOHS/DHS/FEMA grant which may be extended beyond the date set in the attached Sub-recipient Award document the Sub-recipient is responsible for proper reporting, for maintenance of an inventory tracking system and for assuring the location of all equipment purchased through this grant. A physical inventory of the property must be taken, the results reconciled with the property records at least once every two years, and submitted to OKOHS. Inventory records must be maintained which include:

    - Description of the property;
    - Serial number or other identification number;
    - Source of the property;
    - Identification of title holder;
    - Acquisition date;
    - Cost of the property;
    - Percentage of Federal participation in the cost of the property;
    - Location of the property;
    - Use and condition of the property; and
    - Disposition data, including the date of disposal and sale price.

37. **Leverage of Funding:** To leverage all available funding and resources when possible in order to support and sustain efforts and to maximize the effectiveness of the OKOHS/FEMA funding.

38. **Limited English Proficiency (Civil Rights Act of 1964, Title VI) (Article XX):** All recipients must comply with the Title VI of the Civil Rights Act of 1964 (Title VI) prohibition against discrimination on the basis of national origin, which requires that recipients of federal financial assistance take reasonable steps to provide meaningful access to persons with limited English proficiency (LEP) to their programs and services. Providing meaningful access for persons with LEP may entail providing language assistance services, including oral interpretation and written translation. In order to facilitate

compliance with Title VI, recipients are encouraged to consider the need for language services for LEP persons served or encountered in developing program budgets. Executive Order 13166,

Improving Access to Services for Persons with Limited English Proficiency (August 11, 2000), requires federal agencies to issue guidance to recipients, assisting such organizations and entities in understanding their language access obligations. DHS published the required recipient guidance in April 2011, DHS Guidance to Federal Financial Assistance Recipients Regarding Title VI Prohibition Against National Origin Discrimination Affecting Limited English Proficient Persons, 76 Fed. Reg. 21755-21768, (April 18, 2011). The Guidance provides helpful information such as how a recipient can determine the extent of its obligation to provide language services; selecting language services; and elements of an effective plan on language assistance for LEP persons. For additional assistance and information regarding language access obligations, please refer to the DHS Recipient Guidance https://www.dhs.gov/guidance-published-help-department-supported-organizations-provide-meaningful-access-people-limited and additional resources on http://www.lep.gov.

39. **Lobbying Prohibitions (Article XXI):** All recipients must comply with 31 U.S.C. §1352, which provides that none of the funds provided under an award may be expended by the recipient to pay any person to influence, or attempt to influence an officer or employee of any agency, a Member of Congress, an officer or employee of Congress, or an employee of a Member of Congress in connection with any Federal action concerning the award or renewal.

40. **Monitoring:** The Sub-recipient agrees to comply with monitoring requirements of OKOHS including, but not limited to, a willingness to provide reasonable access to relevant records, equipment and maintenance of an up to date equipment inventory.

41. **National Incident Management System (NIMS) Implementation:** To comply with any National Incident Management Systems (NIMS) compliance requirements as set forth by OKOHS or the NIMS Integration Center including, but not limited to, ongoing NIMS compliance by the Sub-recipient jurisdiction during the term of the grant.

42. **Non-Supplanting Requirement (Article XXII):** All recipients who receive awards made under programs that prohibit supplanting by law must ensure that Federal funds do not replace (supplant) funds that have been budgeted for the same purpose through non-Federal sources. Where federal statutes for a particular program prohibits supplanting, applicants or recipients may be required to demonstrate and document that a reduction in non-Federal resources occurred for reasons other than the receipt of expected receipt of Federal funds.

43. **Obligation of Grant Funds:** That all grant funds must be obligated and expended within the project period set forth on the Sub-recipient award document (Schedule B) unless OKOHS provides a written exception or extension to the Sub-recipient. Any funds not properly obligated and expended by the Sub-recipient during the project period will lapse and revert to OKOHS for potential reallocation to other allowable uses in accordance with DHS/FEMA guidelines.

44. **Patents and Intellectual Property Rights (Article XXIII):** Unless otherwise provided by law, recipients are subject to the Bayh-Dole Act, Pub. L. No. 96-517, as amended, and codified in 35 U.S.C. § 200 et seq. All recipients are subject to the specific requirements governing the development, reporting, and disposition of rights to inventions and patents resulting from financial assistance awards are in 37 C.F.R. Part 401 and the standard patent rights clause in 37 C.F.R. § 401.14.

45. **Political Activity:** That it will not use any federal funds, either directly or indirectly, in support of the enactment, repeal, modification or adoption of any law, regulation or policy, at any level of government, without the express prior written approval of the Oklahoma Office of Homeland Security (OKOHS) and the Department of Homeland Security (DHS)/ the Federal Emergency Management Administration (FEMA).

46. **Procurement:** The recipient agrees to follow the Procurement Standards outlined in the DHS/FEMA Financial Management Guide. These standards require that Sub-recipients use their own procurement procedures and regulations, provided that the procurement conforms to applicable Federal law and standards.

    That all procurement transactions, whether negotiated or competitively bid and without regard to dollar value, shall be conducted in a manner that will provide maximum open and free competition.

    That all sole-source procurements, including contracts properly bid for which only one entity submits a qualified bid, in excess of $100,000 must receive prior written approval of OKOHS. Written justification must be provided for sole source procurement and should include a description of the program and what service or product is being contracted, an explanation of why it is necessary to contract non-competitively, time constraints and any other pertinent information.

47. **Procurement of Recovered Materials (Article XXIV):** All recipients must comply with section 6002 of the Solid Waste Disposal Act, as amended by the Resource Conservation and Recovery Act. The requirements of Section 6002 include procuring only items designated in guidelines of the Environmental Protection Agency (EPA) at 40 C.F.R. Part 247 that contain the highest percentage of recovered materials practicable, consistent with maintaining a satisfactory level of competition, where the purchase price of the item exceeds $10,000 or the value of the quantity acquired by the preceding fiscal year exceeded $10,000; procuring solid waste management services in a manner that maximizes energy and resource recovery; and establishing an affirmative procurement program for procurement of recovered materials identified in the EPA guidelines.

48. **Program Guidance:** To comply with all applicable laws, regulations and the applicable Notice of Funding Opportunity. All allocations and uses of funds under this grant will be in accordance with the Homeland Security Grant Program Guidelines and Application Kit, or where applicable the Notice of Funding Opportunity, collectively referred to as the Program Guidance. All Sub-recipients are assumed to have read, understood, and accepted the Program Guidance. The following link will provide access to the respective Grant Year's Program Guidance and Application Kits: https://www.fema.gov/homeland-security-grant-program

    That the use of all funds under this grant must support the goals and objectives included in the State Homeland Security Strategy and/or the Urban Area Homeland Security Strategy. Allocations and use of grant funds must also support the Investments identified in an Investment Justification, which may have been submitted as part of OKOHS's application for federal funding.

    To utilize grant funds for the furthering of the OKOHS State Strategy, the National Preparedness Guidelines and the DHS/FEMA defined National Priorities.

    To comply with grant closeout procedures established by OKOHS.

49. **Project Implementation:** The Sub-recipient agrees to implement and complete this project within the project period of the grant or be subject to forfeiture of grant funds.

    That this project will be administered by the local or state governmental entity having authority and responsibility for its completion and that such entity will ensure institutional, managerial and financial capability for proper planning, management and completion of approved projects.

    That the projects funded with this grant should demonstrate multi-disciplinary coordination of response efforts, including but not limited to: emergency medical services, emergency management, fire service, law enforcement, hazardous materials, public works, public health, health care facilities, military, government administration, private sector, citizens and communications.

50. **Property Control/Disposition:** Effective control and accountability must be maintained for all personal property. Sub-recipients must adequately safeguard all such property and must assure that it is used solely for authorized purposes. Sub-recipients should exercise caution in the use, maintenance, protection and preservation of such property.

    Title – Title to grant-funded equipment will continue to be held by the recipient or sub-recipient who purchase the equipment. The regulation establishes, however, that this title is a conditional title, meaning that the title is conditioned on the recipient or sun-recipient complying with the use, management and disposition requirements for the equipment in the 2 C.F.R § 200.313, and all other 2 C.F.R Part 200 requirements related to the property management that are applicable to equipment.

    Encumbering Equipment – Additionally, recipients and sub-recipients may encumber grant-funded equipment without prior approval from FEMA or the pass-through entity. Recipients with specific questions about encumbering equipment should refer to their program NOFO or contact their program Analyst.

51. **Protected Critical Infrastructure Information (PCII):** That Protected Critical Infrastructure Information (PCII) will be treated in a manner consistent with the Critical Infrastructure Information Act of 2002 (Public Law 107-296) (CII Act), which created a new framework, that enables State and local jurisdictions and members of the private sector to voluntarily submit sensitive information regarding critical infrastructure to DHS/FEMA. The Act also provides statutory protection for voluntarily shared CII from public disclosure and civil litigation. If validated as PCII, these documents can only be shared with authorized users who agree to safeguard the information. PCII accreditation is a formal recognition that the covered

government entity has the capacity and capability to receive and store PCII. DHS requires all State Administering Agencies (SAAs) to complete the PCII accreditation process. Accreditation activities include signing a memorandum of agreement (MOA) with DHS, appointing a PCII Officer, and implementing a self-inspection program.

52. **Publications:** That all publications created with funding under this grant shall prominently contain the following statement: "This Document was prepared under a grant from the Federal Emergency Management Administration (FEMA) Grant Programs Directorate (GPD), U.S. Department of Homeland Security (DHS). Points of view or opinions expressed in this document are those of the authors and do not necessarily represent the official position or policies of FEMA/GPD or DHS."

53. **Recording and Documentation of Receipts and Expenditures:** Sub-recipient's accounting procedures must provide for accurate and timely recording of receipt of funds by source of expenditures made from such funds and unexpended balances. These records must contain information pertaining to grant awards, obligations, unobligated balances, assets, liabilities, expenditures and program income. Controls must be established which are adequate to ensure that expenditures charged to the sub-grant activities are for allowable purposes. Additionally, effective control and accountability must be maintained for all grant cash, real and personal property and other assets. Accounting records must be supported by such source documentation as cancelled checks, paid bills, payrolls, time and attendance records, contract documents, grant award documents, etc.

54. **Rehabilitation Act of 1973 (Article XXX):** All recipients must comply with the requirements of Section 504 of the Rehabilitation Act of 1973, 29 U.S.C. § 794, as amended, which provides that no otherwise qualified handicapped individual in the United States will, solely by reason of the handicap, be excluded from participation in, be denied the benefits of, or be subjected to discrimination under any program or activity receiving Federal financial assistance. These requirements pertain to the provision of benefits or services as well as to employment.

55. **Reports:** To provide the required quarterly status reports and other information and documentation that may be requested by OKOHS.

    To cooperate with any assessments, national evaluation efforts, or information or data collection requests related to any activities within this project.

    To provide DHS/FEMA and OKOHS reasonable assistance with assessments conducted to (a) determine the existing level of preparedness within the Sub-recipient's jurisdiction; (b) determine the homeland security related needs of the jurisdiction, and (c) measure progress in achieving state and federal preparedness goals.

56. **Reporting Sub-awards and Executive Compensation (Article XV):** All recipients must report each action that obligates $25,000 or more in Federal funds that does not include Recovery funds (as defined in section 1512(a)(2) of the American Recovery and Reinvestment Act of 2009, Pub. L.111-5) for a sub-award to an entity, unless provided in paragraph D as required by 2 CFR Part 170, "Reporting Sub-award and Executive Compensation Information" and the Federal Funding Accountability and Transparency Act 2006 (FFATA). Recipients must register at www.sam.gov and report the information about each obligating action in accordance with the submission instructions posted at www.fsrs.gov.

57. **Retention of Records:** Any records relevant to the grant must be retained for at least three years following the termination date, which may be extended beyond the scheduled termination date, of the OKOHS/DHS/FEMA grant (OKOHS will provide the notice on the OKOHS web site under the grants section regarding the start date of this three year period). In accordance with the requirements set forth in the 2 C.F.R Part 200, all financial records, supporting documents, statistical records, and all other records pertinent to the award shall be retained by each organization for at least three years from the date of submission of the final expenditure report. In cases where litigation, a claim, or an audit is initiated prior to expiration of the three year period, records must be retained until completion of the action and resolution of issues or the end of the three year period, whichever is later. Retention is required for purposes of Federal examination and audit. Records may be retained in an electronic format.

58. **SAFECOM (Article XXVI):** All recipients who receive awards made under programs that provide emergency communication equipment and its related activities must comply with the SAFECOM Guidance for Emergency Communication Grants, including provisions on technical standards that ensure and enhance interoperable communications.

59. **Sanctions:** If a Sub-recipient materially fails to comply with the terms and conditions of an award, OKOHS or DHS/FEMA may take one or more of the following actions, as appropriate in the circumstances:

    - Temporarily withhold cash payments pending correction of the deficiency by the Sub-recipient.

- Disallow (that is, deny both use of funds and any applicable matching credit for) all or part of the cost of the activity or action not in compliance.
- Wholly or partly suspend or terminate the current award.
- Withhold future awards for the project or program.
- Pursue any other legal remedy that may be available.
- Require reassignment of any tangible or intangible items purchased with OKOHS grant funding to another local jurisdiction.

Prior to taking action, OKOHS will provide the Sub-recipient reasonable notice of intent to impose measures and will make efforts to resolve the problem informally.

60. **Terrorist Financing E.O. 13224 (Article XXVII):** All recipients must comply with U.S. Executive Order 13224 and U.S. law that prohibit transactions with, and the provisions of resources and support to, individuals and organizations associated with terrorism. It is the legal responsibility of recipients to ensure compliance with the E.O. and laws.

61. **Title VI of the Civil Rights Act of 1964 (Article VIII):** All recipients must comply with the requirements of Title VI of the Civil Rights Act of 1964 (42 U.S.C. § 2000d et seq.), which provides that no person in the United States will, on the grounds of race, color, or national origin, be excluded from participation in, be denied the benefits of, or be subjected to discrimination under any program or activity receiving Federal financial assistance. Implementing regulations for the Act are found at 6 CFR Part 21 and 44 CFR Part 7.

62. **Title IX of the Education Amendments of 1972 (Equal Opportunity in Education Act)(Article XXVIII):** All recipients must comply with the requirements of Title IX of the Education Amendments of 1972 (20 U.S.C. § 1681 et seq.), which provides that no person in the United States will, on the basis of sex, be excluded from participation in, be denied the benefits of, or be subjected to discrimination under any educational program or activity receiving Federal financial assistance. These regulations are codified at 6 CFR Part 17 and 44 CFR Part 19

63. **Trafficking Victims Protection Act of 2000 (Article XXIX):** All recipients must comply with the requirements of the government-wide award term which implements Section 106(g) of the Trafficking Victims Protection Act (TVPA) of 2000, as amended (22 U.S.C. § 7104). This is implemented in accordance with OMB Interim Final Guidance, Federal Register, Volume 72, No. 218, November 13, 2007. Full text of the award term is located at 2 CFR § 175.15.

64. **Training:** All requested or relevant training records of Sub-recipients must be submitted to the OKOHS Training and Exercise Coordinator.

65. **Unauthorized Expenditures:** Examples of **unauthorized expenditures** include but are not limited to:

    - Hiring of Public Safety Personnel
    - General use equipment including but not limited to items jurisdictions would normally be expected to have.
    - Items not pre-approved by OKOHS
    - Exercise related costs for non expendable equipment items (e.g., electronic messaging signs) and/or vehicle/emergency response apparatus costs (other than the cost of fuel/gasoline, which is allowable)

66. **Universal Identifier and System of Award Management (Article XXXI):** All recipients must maintain the currency of the information in the SAM until submission of the final financial report required under the award or receive final payment, whichever is later, as required by 2 C.F.R. Part 25.

67. **USA Patriot Act of 2001(Article XXXII):** All recipients must comply with the requirements of the Uniting and Strengthening America by Providing Appropriate Tools Required to Intercept and Obstruct Terrorism Act (USA PATRIOT Act), which amends 18 U.S.C. §§ 175-175c. Among other things, the USA PATRIOT Act prescribes criminal penalties for possession of any biological agent, toxin, or delivery system of a type or in a quantity that is not reasonably justified by a prophylactic, protective, bona fide research, or other peaceful purpose.

68. **Utilization of Minority Businesses:** Sub-recipients are encouraged to utilize qualified minority firms where cost and performance of major contract work will not conflict with funding or time schedules.

69. **Whistleblower Protection Act (Article XXXV):** All recipients must comply with the statutory requirements for whistleblower protections (if applicable) at 10 U.S.C § 2409, 41 U.S.C. 4712, and 10 U.S.C. § 2324, 41 U.S.C. §§ 4304 and 4310.

70. **Written Approval of Changes:** Sub-recipient must notify OKOHS in writing of any events or changes requiring adjustment in the grant award. Examples include but are not limited to: changes of address, project manager, project site, budget categories or scope.

Authorized Official:

Stewart Hoffman, Mayor
Name *Please type or print*

Signature

Date

Oklahoma Office of
Homeland Security
Prevent, Protect, Prepare

P.O. Box 11415
Oklahoma City, OK 73136
(405) 425-7296 Office • (405) 425-7295 Fax
www.homelandsecurity.ok.gov

SIGNATURE AUTHORIZATION

Required to sign all OKOHS subgrant documents

PROJECT CONTACT/SECONDARY AUTHORIZED OFFICIAL INFORMATION

PRINT Name James Dalton			
Title Emergency Management Director			
Agency City of Durant, OK - BryanCounty, OK.			
Mailing Address 2808 Enterprise Boulevard - Durant		State OK	Zip 74701
Phone # 580.924.3661	Fax # 580.924.8360	Email jdalton@durant.org	

James Dalton, EM Director — Primary Contact Signature

August 8, 2016 — Date

OPTIONAL Secondary Contact

Authorized to sign subgrant documents? [X] Yes [ ] No
(If "yes," please sign below)

PRINT Name Kenneth Eppler	Title / Agency Deputy Director - Durant / Bryan County Emergency Management
Email keppler@durant.org	Phone # 580.924.3661

Secondary Contact Signature

August 8, 2016 — Date

AGENCY/JURISDICTION CHIEF EXECUTIVE OFFICER – PRIMARY AUTHORIZED OFFICIAL INFORMATION

City or County Official (Mayor, City Manager, County Commissioner)

I hereby authorize the individual(s) identified above to act on my behalf in coordination with the Oklahoma Office of Homeland Security (OKOHS) and to sign all documentation related to this subgrant.

PRINT Chief Executive Officer Name Stewart Hoffman	OKOHS Award # 750.065	
Title Mayor, City of Durant, OK	Phone # 580.931.6605	
Jurisdiction (City, County, etc.) City of Durant, OK	Email shoffman@durant.org	
Mailing Address 300 W. Evergreen	State OK	Zip 74701

Chief Executive Officer Signature

Date

Form Revised as of: September 10, 2007

If any of the above information changes please submit a new ***SIGNATURE AUTHORIZATION FORM*** *to OKOHS immediately.*

Agenda Item: 1.n.

The City of Durant

Durant/Bryan County Emergency Management

Memorandum

Date:	8/30/2016
To:	Mayor and City Council
From:	James Dalton, Director of Emergency Management Services
Re:	Consider Acceptance of Oklahoma Homeland Security Grant #750.067 for $375 for Annual Cellular Service for the RDT 2 Communications Trailer

---

Council Information / Action Requested

Accept Oklahoma Homeland Security Grant #750.067 for $375 for Annual Cellular Service for the RDT 2 Communications Trailer

City Staff Information / Action Follow-up, if Council authorizes this action:

ATTACHMENTS:

Description	Type	Upload Date
Oklahoma Homeland Security Grant #750.067 for $375. for annual Cellular Service for the RDT 2 Communications Trailer	Cover Memo	8/30/2016

THE CITY OF DURANT

Office of Emergency Management

DURANT
· OKLAHOMA ·

Memorandum

Date: August 11, 2016

To: Mayor and City Council

From: James Dalton, Emergency Management Director

Re: Acceptance of the Oklahoma Office of Homeland Security 2017 Homeland Security Grant Program; Rapid Deployment Communication Trailer Cell Service Grant #750.067

Council Information / Action Requested

- Request the Mayor and Council to allow Durant / Bryan County Emergency Management to accept the Oklahoma Office of Homeland Security 2017 Homeland Security Grant Program; Rapid Deployment Communication Trailer Cell Service Grant #750.067 We have been awarded this grant as a Supplemental Grant to provide for the annual cost of CELL Service on the Rapid Deployment Communication Trailer # 2 that was awarded to the City of Durant on August 5, 2014. This grant is a 100% OHS grant that is funded through the Oklahoma Office of Homeland Security. **NOTE:** We have received this grant for multiple years in the past.
- All actions should take no more than 5 minutes.

City Staff Information / Action Follow-up

- I, James Dalton, have provided all documental needed for the grant.
- I, James Dalton, have been notified of the grant award of $375.
- I, James Dalton, will verify with the Clerk's Office that the grant funding has been received and deposit.
- I, James Dalton, will do the quarterly reporting required for the grant.
- I, James Dalton, will maintain records for grant compliance and documentation.

Oklahoma Office of
Homeland Security
Prevent, Protect, Prepare

GRANT PROGRAM
Sub-Recipient Award Terms and Conditions

Instructions:
The Authorized Official must sign the following required documents and return to our office. Please keep a copy of ALL documents for your records.

1. **OKOHS Memorandum, Schedule "A".** (***SIGNATURE REQUIRED***)
2. **Sub-recipient Award Document, Schedule "B".** (***SIGNATURE REQUIRED***)
3. **Sub-recipient Terms and Conditions, Schedule "1".** (***SIGNATURE REQUIRED, RETURN ONLY PAGE 11***)
4. **Authorization to Sign OKOHS Program Documents, Schedule "3".** (***SIGNATURES REQUIRED)***
5. **Quarterly Status Report, Schedule "4".** (***SIGNATURE NOT REQUIRED AT THIS TIME.*** This form is included for grant your convenience only. Report due within 15 days following each calendar quarter.)

KIM EDD CARTER
DIRECTOR

MARY FALLIN
GOVERNOR

STATE OF OKLAHOMA
OFFICE OF HOMELAND SECURITY

TO: City of Durant
Stewart Hoffman, Mayor
FROM: Kim Edd Carter, Director
DATE: August 8, 2016
RE: Oklahoma Office of Homeland Security 2015 Homeland Security Grant Program; Rapid Deployable Communications Trailer Cell Service; # 750.067

Your agency has been selected to receive $375.00, (the Proposed Award), pursuant to the Oklahoma Office of Homeland Security (OKOHS) fiscal year 2015 Homeland Security Grant Program (the 2015 Program). Among other initiatives, the 2015 Program provides this funding for the purchase of cell service for the Rapid Deployable Communications Trailer.

The 2015 Program is a federally funded grant using money provided to the State of Oklahoma as a part of the FY 2015 (FEMA/DHS) Homeland Security Grant Program. Like previous FEMA/DHS/OKOHS grant programs, the 2015 Program is a reimbursement grant.
The process requires the following actions:

(1) Acceptance of the terms and conditions of the 2015 Program including but not limited to those noted on the attached *Schedule "1"*;
(2) Submission of a Budget Detail Worksheet (BDW) to OKOHS with a list of estimated costs of specific allowable items;
(3) Receipt of an approval letter from OKOHS with a schedule of approved items. You must have this ***OKOHS APPROVAL LETTER IN HAND PRIOR TO EXPENDING FUNDS***;
(4) After your receipt of the OKOHS Approval Letter, you may purchase approved items in an amount not to exceed the amount of the Proposed Award; and
(5) Upon receipt of the purchased items, you will need to submit a Reimbursement Request Form, copies of the associated invoices and purchase orders to OKOHS. (Copies of the Reimbursement Request Form and the BDW are available on the OKOHS website at www.homelandsecurity.ok.gov).
(6) After your payment to the vendor has been processed you will need to submit a copy of the cancelled check and an inventory form to OKOHS.

Reimbursement checks are generally mailed to sub grantees by OKOHS within 30 days of receipt of the signed Reimbursement Request Form and associated invoices. If this process will cause a significant hardship, please contact OKOHS for further guidance.

If your organization is willing to accept the Proposed Award subject to all the terms and conditions of the 2015 Program, please so indicate by: (1) affixing the signature of the appropriate chief executive officer (i.e. the chair of the county commissioners, the mayor, the agency director, or the city manager) in the space provided below; and (2) returning an original

P.O. Box 11415 Oklahoma City, OK 73136-0415 PHONE 405/ 425-7296 FAX 405/ 425-7295 www.homelandsecurity.ok.gov

fully executed copy of this letter and each document listed on *Schedule "1"* (each of which is included with this award packet) to OKOHS **ON OR BEFORE August 26, 2015** Post Office Box 11415, Oklahoma City, Oklahoma 73136.0415.

Should you have questions or need additional assistance contact Robbie Foster at 405-425-7510 or by e-mail at robbie.foster@okohs.ok.gov or Christina Daron at 405-425-7591 or by email at christina.daron@okohs.ok.gov.

Thank you for your willingness to participate in this important initiative. We appreciate your efforts to protect our citizens and we look forward to working with you.

Agreed and accepted this ___ day of _____ 2016:

Government/Agency Name: City of Durant, OK-Department of Emergency Management

Signature: _____

Printed Name: Stewart Hoffman

Title: Mayor

Oklahoma Office of
Homeland Security
Prevent, Protect, Prepare

P.O. Box 11415
Oklahoma City, OK 73136
(405) 425-7296 Office (405) 425-7295 Fax
www.homelandsecurity.ok.gov

SUB-GRANTEE AWARD

Sub-grantee – Required for Reimbursement **FEI#** 736005186 **DUNS #** 010473114	**Original Award Amount** **$375.00**
City of Durant **Stewart Hoffman, Mayor** **300 W. Evergreen** **Durant, OK 74701**	**Award Number** **#750.067** **Award Effective Date** **8/11/2015** **Project Period** **9/1/2015 – 8/31/2017**
Project Title/IJ Homeland Security Grant Program Rapid Deployable Communications Trailer Cell Service/IJ #5	**CFDA** **97.073** **(OKOHS # 97.073 - 6100)**

Applicable Funds	Region	County
Homeland Security Grant Program **FY 2015** (SHSP - Local)	**5**	**Bryan**

Method of Payment: **This is a Reimbursement Grant.**	**Is Sub-Grantee NIMS Compliant?** (Please Check One) **YES** ☒ **NO** ☐
Agency/Jurisdiction Chief Executive Officer Information-Primary Authorized Official City or County Official (Mayor, City Manager, County Commissioner)	**Project Contact/ Secondary Authorized Official** **(If Applicable)**
Title of Primary Authorized Official Mayor	Title of Secondary Authorized Official Durant/Bryan County Emergency Mgt. Director
Name Stewart Hoffman	Name James Dalton
Telephone 580-931-6605 / Fax 580-924-3490	Telephone 580-924-3361 / Fax 580-924-8360
Email shoffman@durant.org	Email jdalton@durant.org
Signature of Primary Authorized Official: **(Required)** Date	Signature of Secondary Authorized Official: **(Required)** Date

The Primary Authorized Official certifies:

- Legal authorization to accept grants on behalf of the named governmental entity.
- Proposed project can be completed by August 31, 2017
- Sub-Grantee will comply with all laws, regulations, statutes, assurances, certifications, and other requirements referenced in Schedules A, B and C (if applicable) and Schedules 1-5 (if applicable) each of which is attached hereto.
- All submitted data is true and correct to the best of signatory's knowledge.

Special Conditions

OKOHS Approving Official **Kim Edd Carter** **Director**	**OKOHS Contact Information** Oklahoma Office of Homeland Security P.O. Box 11415 Oklahoma City, OK 73136-0415	
Signature of OKOHS Approving Official SC Ahman for KEC	Telephone (405) 425-7296	Fax (405) 425-7295

Homeland Security Grant Program Terms and Conditions

Recipients of Oklahoma Office of Homeland Security ("OKOHS")/Department of Homeland Security ("DHS")-Federal Emergency Management Administration ("FEMA") grant funds ("Sub-recipient(s)") are urged to carefully review and understand all terms and conditions of the award prior to award acceptance. Failure to comply with these terms and conditions may result in disallowance of costs and recovery of funds and/or suspension or termination of funds and/or award.

As a condition of receipt of this grant, the Sub-recipient understands and agrees:

1. **Acknowledgement of Federal Funding from DHS (Article III):** All recipients must acknowledge their use of federal funding when issuing statements, press releases, request for proposals, bid invitations, and other documents describing projects or programs funded in whole or in part with Federal funds.

2. **Activities Conducted Abroad (Article IV):** All recipients must ensure that project activities carried on outside the United States are coordinated as necessary with appropriate government authorities and that appropriate licenses, permits, or approvals are obtained.

3. **Age Discrimination Act of 1975 (Article V):** All recipients must comply with the requirements of the Age Discrimination Act of 1975 (42 U.S.C. § 6101 et seq.), which prohibits discrimination on the basis of age in any program or activity receiving Federal financial assistance.

4. **Allowable Costs:** The recipient agrees that all allocations and use of funds under this grant will be in accordance with the Notice of Funding Opportunity (NOFO).

   OKOHS requires that Costs charged to this project are subject to advance written approval by OKOHS.

   OKOHS requires that only food and beverages **approved in writing** by OKOHS in advance will be permitted to be purchased with DHS/FEMA funds. As a general rule, FEMA and OKOHS discourage the use of federal funding for food and beverages. While there may be limited exceptions made to this rule that apply solely to working lunches, a strict reasonableness standard must be maintained.

   OKOHS requires that use of DHS/FEMA funding to pay for speaker fees **must be approved in writing** by OKOHS in advance any time the speaker is paid in excess of $100 per hour for services.

5. **Americans with Disabilities Act of 1990 (ADA) (Article VI):** All recipients must comply with the requirements of Titles I, II, and III of the Americans with Disabilities Act, which prohibits recipients from discriminating on the basis of disability in the operation of public entities, public and private transportation systems, places of public accommodation, and certain testing entities (42 U.S.C. §§ 12101–12213).

6. **Assurances, Administrative requirements and Cost Principals (Article II):** The administrative, cost principles, and audit requirements that apply to DHS award recipients originate from 2 C.F.R. Part 200, Uniform Administrative Requirement, Cost Principles, and Audit Requirements for Federal Awards, as adopted by DHS at 2 C.F.R. Part 3002.

7. **Audit Requirements:** The Sub-recipient agrees to comply with the requirements of the 2 C.F.R. Part 200 Section F.

   Entities that expend $750,000 or more in Federal funds (from all sources) in a fiscal year require an organization-wide financial and compliance audit report. The audit must be performed in accordance with the Government Accountability Office Government Auditing Standards, Audits of States, Local Governments, and Non-Profit Organizations. Sub-recipients are required to submit to OKOHS (within 90 days of completion) a copy of any audit report received by Sub-recipient in connection with any audit performed by or as a requirement of any regulatory body (federal, state or local) that is conducted with respect to activity taking place during the term of the OKOHS/DHS/FEMA Award. OKOHS will review the audit and determine if any findings exist which may impact the ability of the Sub-recipient to continue to receive funds pursuant to this grant or future funding opportunities.

8. **Best Practices for Collection and Use of Personally Identifiable Information (PII)(Article VII):** All award recipients who collect PII are required to have a publically-available privacy policy that describes what PII they collect, how they use the PII, whether they share PII with third parties, and how individuals may have their PII corrected where appropriate. Award recipients may also find as a useful resource the DHS Privacy Impact Assessments: http://www.dhs.gov/xlibrary/assets/privacy/privacy_pia_guidance_june2010.pdf and http://www.dhs.gov/xlibrary/assets/privacy/privacy_pia_template.pdf, respectively.

9. **Civil Rights Act of 1968 (Article XI):** All recipients must comply with Title VIII of the Civil Rights Act of 1968, which prohibits recipients from discriminating in the sale, rental, financing, and advertising of dwellings, or in the provision of services in connection therewith, on the basis of race, color, national origin, religion, disability, familial status, and sex (42 U.S.C. § 3601 et seq.), as implemented by the Department of Housing and Urban Development at 24 CFR Part 100. The prohibition on disability discrimination includes the requirement that new multifamily housing with four or more dwelling units—i.e., the public and common use areas and individual apartment units (all units in buildings with elevators and ground-floor units in buildings without elevators)—be designed and constructed with certain accessible features (see 24 CFR § 100.201).

10. **Community Emergency Response Team (CERT) Training:** That any CERT training funded with OKOHS/FEMA grant funds will be conducted by OKOHS approved trainers.

11. **Compliance Agreement:** The Sub-recipient agrees to abide by all Terms and Conditions including "Special Conditions" placed upon the grant award by OKOHS. Failure to comply could result in a "Stop Payment" being placed on the grant.

12. **Commingling of Funds:** The Sub-recipient is prohibited from commingling funds on either a program-by-program or a project-by-project basis without prior written approval of OKOHS and DHS/FEMA. The accounting systems of all Sub-recipients must ensure that agency funds are not commingled with funds from other awards or Federal agencies. Each award must be accounted for separately.

13. **Confidential Information:** Any reports, information, data, etc., given to, prepared or assembled by the Sub-recipient under this grant, which OKOHS requests to be kept confidential, shall not be made available to any individual or organization by the Sub-recipient without prior written approval of OKOHS.

14. **Conflict Of Interest:** Sub-recipients should take every precaution to avoid the appearance of a conflict of interest. Violations of the conflict of interest standards may result in criminal, civil, or administrative penalties. In the use of agency project funds, officials or employees of State or local units of government shall avoid any action that might result in, or create the appearance of:

    - Using his or her official position for private gain;
    - Giving preferential treatment to any person;
    - Losing complete independence or impartiality;
    - Making an official decision outside official channels; or
    - Affecting adversely the confidence of the public in the integrity of the government or the program. For example, where a Sub-recipient of federal funds makes sub-awards under any competitive process and an actual conflict or an appearance of a conflict of interest exists, the person for whom the actual or apparent conflict of interest exists should recuse himself or herself not only from reviewing the application for which the conflict exists, but also from the evaluation of all competing applications.

15. **Contract Provisions for Non-federal Entity Contracts under Federal Awards (Article XXV):**

    a. Contracts for more than the simplified acquisition threshold set at $150,000. All recipients who have contracts exceeding the acquisition threshold currently set at $150,000, which is the inflation adjusted amount determined by Civilian Agency Acquisition Council and the Defense Acquisition Regulation Council as authorized by 41 U.S.C. §1908, must address administrative, contractual, or legal remedies in instance where contractors violate or breach contract terms and provide for such sanctions and penalties as appropriate.

    b. Contracts in excess of $10,000. All recipients that have contracts exceeding $10,000 must address termination for cause and for convenience by the non-Federal entity including the manner by which it will be effected and the basis for settlement.

16. **Copyright (Article X):** All recipients must affix the applicable copyright notices of 17 U.S.C. § 401 or 402 and an acknowledgement of Government sponsorship (including award number) to any work first produced under Federal financial

assistance awards, unless the work includes any information that is otherwise controlled by the Government (e.g., classified information or other information subject to national security or export control laws or regulations).

17. **Data Universal Numbering System (DUNS) Numbers:** The Sub-recipient will obtain a Data Universal Numbering System (DUNS) Number (a nine digit number established and assigned by Dun and Bradstreet, Inc. (D&B) to uniquely identify business entities) for its organization and provide that number to OKOHS as a precondition of funding reimbursement under the grant. A DUNS number may be obtained from D&B by telephone (currently 866.705.5711) or via the Internet at http://fedgov.dnb.com/webform.

18. **Debarment and Suspension (Article XI):** All recipients must comply with Executive Orders 12549 and 12689, which provide protection against waste, fraud and abuse by debarring or suspending those persons deemed irresponsible in their dealings with the Federal government. **See Schedule 2**

19. **DHS Seals, Logo, and Flags (Article XXXIII):** All recipients must obtain DHS's approval prior to using the DHS seal(s), logos, crests or reproductions of flags or likenesses of DHS agency officials, including use of the United States Coast Guard seal, logo crests or reproduction of flags or likenesses of Coast Guard officials.

20. **DHS Specific Acknowledgements and Assurances (Article XXXV):** All recipients must acknowledge and agree—and require any sub-recipients, contractors, successors, transferees, and assignees acknowledge and agree—to comply with applicable provisions governing DHS access to records, accounts, documents, information, facilities, and staff.

    1. Recipients must cooperate with any compliance review or complaint investigation conducted by DHS.

    2. Recipients must give DHS access to and the right to examine and copy records, accounts, and other documents and sources of information related to the grant and permit access to facilities, personnel, and other individuals and information as may be necessary, as required by DHS regulations and other applicable laws or program guidance.

    3. Recipients must submit timely, complete, and accurate reports to the appropriate DHS officials and maintain appropriate backup documentation to support the reports.

    4. Recipients must comply with all other special reporting, data collection, and evaluation requirements, as prescribed by law or detailed in program guidance.

    5. If, during the past three years, the recipient has been accused of discrimination on the grounds of race, color, national origin (including limited English proficiency), sex, age, disability, religion, or familial status, the recipient must provide a list of all such proceedings, pending or completed, including outcome and copies of settlement agreements to the DHS awarding office and the DHS Office of Civil Rights and Civil Liberties.

    6. In the event any court or administrative agency makes a finding of discrimination on grounds of race, color, national origin (including limited English proficiency), sex, age, disability, religion, or familial status against the recipient, or the recipient settles a case or matter alleging such discrimination, recipients must forward a copy of the complaint and findings to the DHS Component and/or awarding office.

    The United States has the right to seek judicial enforcement of these obligations.

21. **Disposition of Equipment Acquired Under the Federal Award (Article XXXVIII):** When original or replacement equipment acquired under this award by the recipient or its sub-recipients no longer needed for the original project or program or for other activities currently or previously supported by DHS/FEMA, you must request instructions form DHS/FEMA to make proper disposition of the equipment pursuant to 2 C.F.R § 200.313.

22. **Drug-Free Workplace Regulations (Article XII):** All recipients must comply with the Drug-Free Workplace Act of 1988 (41 U.S.C. § 701 et seq.), which adopted at 2 C.F.R. 3001, which requires that all organizations receiving grants from any Federal agency agree to maintain a drug-free workplace. DHS has adopted the Act's implementing regulations at 2 C.F.R. 3001. **See Schedule 2**

23. **Duplication of Benefits (Article XIII):** Any cost allocable to a particular Federal award provided for in 2 C.F.R. Part 200, Subpart E may not be charged to other Federal awards to overcome fund deficiencies, to avoid restrictions imposed by Federal statutes, regulations, or terms and conditions of the Federal awards, or for other reasons. However, this prohibition

would not preclude the non-Federal entity from shifting costs that are allowable under two or more Federal awards in accordance with existing Federal statutes, regulations, or the terms and conditions of the Federal awards.

24. **Energy Policy and Conservation Act (Article XIV):** All recipients must comply with the requirements of 42 U.S.C. § 6201 which contain policies relating to energy efficiency that are defined in the state energy conservation plan issues in compliance with this Act.

25. **Environmental and Historic Preservation (EHP):** The Sub-recipient shall comply with all applicable Federal, State, and local environment and historic preservation (EHP) requirements and shall provide any information requested by FEMA to ensure compliance with applicable laws including: National Environmental Policy Act, National Historic Preservation Act, Endangered Species Act, and Executive Orders on Floodplains (11988), Wetlands (11990) and Environmental Justice (12898). Sub-recipient shall not undertake any project having the potential to impact EHP resources without the prior approval of FEMA's EHP division, including but not limited to communications towers, physical security enhancements, new construction, modifications to buildings, ground distrubance, and the purchase and use of sonar equipment. Sub-recipients should submit the FEMA EHP Screening Form for each project as soon as possible following receipt of their grant award. Any construction activities that have been initiated prior to the full environmental and historic preservation review could result in a non-compliance finding. Failure of the Sub-recipient to meet Federal, State, and local EHP requirements and obtain applicable permits may jeopardize Federal funding.

26. **Equipment:** Only equipment that is **approved in writing** by OKOHS will be permitted to be purchased with DHS/FEMA funds. As a general rule, equipment purchased with OKOHS funding must be allowable for the respective grant program funds to be used in accordance with DHS's "Authorized Equipment List".

    When practicable, any equipment purchased with grant funding shall be prominently marked as follows: "Purchased with funding from the Oklahoma Office of Homeland Security with funds provided by the U.S. Department of Homeland Security." Please contact OKOHS when equipment is received to request appropriate labels.

    Personnel must be properly trained to use the equipment purchased under this grant program in accordance with all applicable federal, state and local laws including, but not limited to regulations established by EPA, OSHA, and NFPA By signing and submitting grant acceptance documents, the authorized official certifies employees have received or will receive required training prior to utilizing equipment purchased with OKOHS/FEMA funding.

    To be responsible for replacing or repairing equipment that is lost, stolen, damaged, or destroyed as a result of Sub-recipient's willful or negligent action. Property with a cost in excess of $10,000 that is purchased using OKOHS/DHS/FEMA funding must be insured for casualty loss unless a written exception to this requirement is permitted by OKOHS. Property losses should be reported to OKOHS immediately.

    To maintain a state of readiness for equipment and personnel to respond to a terrorist incident.

27. **Exercises:** Any exercise conducted with OKOHS grant funds must comply with Homeland Security Exercise and Evaluation Program (HSEEP) and Nation Incident Management System (NIMS) requirements. These requirements can be found at http://www.fema.gov/media-library-data/20130726-1914-25045-8890/hseep_apr13_.pdf. Exercise documentation, including but not limited to: objectives, after-action reports, and participants, must be coordinated with and submitted to the OKOHS Training and Exercise Coordinator.

28. **False Claims Act and Program Fraud Civil Remedies (Article XVI):** All recipients must comply with the requirements of 31 U.S.C. § 3729 which set forth that no recipients of federal payments shall submit a false claim for payment. See also 38 U.S.C. § 3801-3812 which details the administrative remedies for false claims and statements made.

29. **Federal Debt Status (Article XVII):** All recipients are required to be non-delinquent in their repayment of any Federal debt. Examples of relevant debt include delinquent payroll and other taxes, audit disallowances, and benefit overpayments. See OMB Circular A-129 and form SF-424B, item number 17 for additional information and guidance.

30. **Financial Guidelines:** The Sub-recipient shall comply with the most recent version of the Administrative Requirements, Cost Principles, and Audit Requirements.

31. **Fly America Act of 1974 (Article XVIII):** All recipients must comply with Preference for U.S. Flag Air Carriers: (air carriers holding certificates under 49 U.S.C. § 41102) for international air transportation of people and property to the extent

that such service is available, in accordance with the International Air Transportation Fair Competitive Practices Act of 1974 (49 U.S.C. § 40118) and the interpretative guidelines issued by the Comptroller General of the United States in the March 31, 1981, amendment to Comptroller General Decision B138942.

32. **Fusion Center:** The Sub-recipient agrees that any funds utilized to establish or enhance state and local fusion centers must support the development of a statewide fusion process that corresponds with the Global Justice/Homeland Security Advisory Council (HSAC) Fusion Center Guidelines and achievement of a baseline level of capability as defined by the Fusion Capability Planning Tool.

    The Sub-recipient agrees that Homeland Security Information Network (HSIN) must serve as the primary vehicle by which information /intelligence is shared with DHS/FEMA as part of the fusion process across the Federal, State, local, regional, tribal and private sectors. All statewide information sharing and analysis centers utilizing HSGP funds must establish connectivity with the DHS/FEMA Homeland Security Operations Center (HSOC) via the HSIN to comply with FEMA policy legislation as outlined in the Program Guidance.

33. **Hotel and Motel Fire Safety Act of 1990 (Article XIV):** In accordance with Section 6 of the Hotel and Motel Fire Safety Act of 1990, 15 U.S.C. §2225(a), all recipients must ensure that all conference, meeting, convention, or training space funded in whole or in part with Federal funds complies with the fire prevention and control guidelines of the Federal Fire Prevention and Control Act of 1974, as amended, 15 U.S.C. §2225.

34. **Interest and Other Program Income:** The applicant agrees to be accountable for all interest or other income earned by the Sub-recipient with respect to sub-recipient funds or as a result of conduct of the project (sale of publications, registration fees, service charges, etc.) All program income generated by this grant during the project must be reported to OKOHS quarterly and must be put back into the project or be used to reduce the Grantor participation in the program. The use or planned use of all program income must have prior written approval from OKOHS.

35. **Interoperable Equipment:** That interoperability of equipment and establishment of multi-regional mutual aid is strongly encouraged and in some cases may be mandated by OKOHS.

    ***Interoperable Communications (IOC) equipment must comply with OKOHS state minimum standards (see** http://www.ok.gov/homeland/Interoperable_Communications/Minimum_Standards_for_Communication_Equipment_Purchases/index.html**)**

36. **Inventory:** During the term of this grant and for three years following termination of the OKOHS/DHS/FEMA grant which may be extended beyond the date set in the attached Sub-recipient Award document the Sub-recipient is responsible for proper reporting, for maintenance of an inventory tracking system and for assuring the location of all equipment purchased through this grant. A physical inventory of the property must be taken, the results reconciled with the property records at least once every two years, and submitted to OKOHS. Inventory records must be maintained which include:

    - Description of the property;
    - Serial number or other identification number;
    - Source of the property;
    - Identification of title holder;
    - Acquisition date;
    - Cost of the property;
    - Percentage of Federal participation in the cost of the property;
    - Location of the property;
    - Use and condition of the property; and
    - Disposition data, including the date of disposal and sale price.

37. **Leverage of Funding:** To leverage all available funding and resources when possible in order to support and sustain efforts and to maximize the effectiveness of the OKOHS/FEMA funding.

38. **Limited English Proficiency (Civil Rights Act of 1964, Title VI) (Article XX):** All recipients must comply with the Title VI of the Civil Rights Act of 1964 (Title VI) prohibition against discrimination on the basis of national origin, which requires that recipients of federal financial assistance take reasonable steps to provide meaningful access to persons with limited English proficiency (LEP) to their programs and services. Providing meaningful access for persons with LEP may entail providing language assistance services, including oral interpretation and written translation. In order to facilitate

compliance with Title VI, recipients are encouraged to consider the need for language services for LEP persons served or encountered in developing program budgets. Executive Order 13166,

Improving Access to Services for Persons with Limited English Proficiency (August 11, 2000), requires federal agencies to issue guidance to recipients, assisting such organizations and entities in understanding their language access obligations. DHS published the required recipient guidance in April 2011, DHS Guidance to Federal Financial Assistance Recipients Regarding Title VI Prohibition Against National Origin Discrimination Affecting Limited English Proficient Persons, 76 Fed. Reg. 21755-21768, (April 18, 2011). The Guidance provides helpful information such as how a recipient can determine the extent of its obligation to provide language services; selecting language services; and elements of an effective plan on language assistance for LEP persons. For additional assistance and information regarding language access obligations, please refer to the DHS Recipient Guidance https://www.dhs.gov/guidance-published-help-department-supported-organizations-provide-meaningful-access-people-limited and additional resources on http://www.lep.gov.

39. **Lobbying Prohibitions (Article XXI):** All recipients must comply with 31 U.S.C. §1352, which provides that none of the funds provided under an award may be expended by the recipient to pay any person to influence, or attempt to influence an officer or employee of any agency, a Member of Congress, an officer or employee of Congress, or an employee of a Member of Congress in connection with any Federal action concerning the award or renewal.

40. **Monitoring:** The Sub-recipient agrees to comply with monitoring requirements of OKOHS including, but not limited to, a willingness to provide reasonable access to relevant records, equipment and maintenance of an up to date equipment inventory.

41. **National Incident Management System (NIMS) Implementation:** To comply with any National Incident Management Systems (NIMS) compliance requirements as set forth by OKOHS or the NIMS Integration Center including, but not limited to, ongoing NIMS compliance by the Sub-recipient jurisdiction during the term of the grant.

42. **Non-Supplanting Requirement (Article XXII):** All recipients who receive awards made under programs that prohibit supplanting by law must ensure that Federal funds do not replace (supplant) funds that have been budgeted for the same purpose through non-Federal sources. Where federal statutes for a particular program prohibits supplanting, applicants or recipients may be required to demonstrate and document that a reduction in non-Federal resources occurred for reasons other than the receipt of expected receipt of Federal funds.

43. **Obligation of Grant Funds:** That all grant funds must be obligated and expended within the project period set forth on the Sub-recipient award document (Schedule B) unless OKOHS provides a written exception or extension to the Sub-recipient. Any funds not properly obligated and expended by the Sub-recipient during the project period will lapse and revert to OKOHS for potential reallocation to other allowable uses in accordance with DHS/FEMA guidelines.

44. **Patents and Intellectual Property Rights (Article XXIII):** Unless otherwise provided by law, recipients are subject to the Bayh-Dole Act, Pub. L. No. 96-517, as amended, and codified in 35 U.S.C. § 200 et seq. All recipients are subject to the specific requirements governing the development, reporting, and disposition of rights to inventions and patents resulting from financial assistance awards are in 37 C.F.R. Part 401 and the standard patent rights clause in 37 C.F.R. § 401.14.

45. **Political Activity:** That it will not use any federal funds, either directly or indirectly, in support of the enactment, repeal, modification or adoption of any law, regulation or policy, at any level of government, without the express prior written approval of the Oklahoma Office of Homeland Security (OKOHS) and the Department of Homeland Security (DHS)/ the Federal Emergency Management Administration (FEMA).

46. **Procurement:** The recipient agrees to follow the Procurement Standards outlined in the DHS/FEMA Financial Management Guide. These standards require that Sub-recipients use their own procurement procedures and regulations, provided that the procurement conforms to applicable Federal law and standards.

    That all procurement transactions, whether negotiated or competitively bid and without regard to dollar value, shall be conducted in a manner that will provide maximum open and free competition.

    That all sole-source procurements, including contracts properly bid for which only one entity submits a qualified bid, in excess of $100,000 must receive prior written approval of OKOHS. Written justification must be provided for sole source procurement and should include a description of the program and what service or product is being contracted, an explanation of why it is necessary to contract non-competitively, time constraints and any other pertinent information.

47. **Procurement of Recovered Materials (Article XXIV):** All recipients must comply with section 6002 of the Solid Waste Disposal Act, as amended by the Resource Conservation and Recovery Act. The requirements of Section 6002 include procuring only items designated in guidelines of the Environmental Protection Agency (EPA) at 40 C.F.R. Part 247 that contain the highest percentage of recovered materials practicable, consistent with maintaining a satisfactory level of competition, where the purchase price of the item exceeds $10,000 or the value of the quantity acquired by the preceding fiscal year exceeded $10,000; procuring solid waste management services in a manner that maximizes energy and resource recovery; and establishing an affirmative procurement program for procurement of recovered materials identified in the EPA guidelines.

48. **Program Guidance:** To comply with all applicable laws, regulations and the applicable Notice of Funding Opportunity. All allocations and uses of funds under this grant will be in accordance with the Homeland Security Grant Program Guidelines and Application Kit, or where applicable the Notice of Funding Opportunity, collectively referred to as the Program Guidance. All Sub-recipients are assumed to have read, understood, and accepted the Program Guidance. The following link will provide access to the respective Grant Year's Program Guidance and Application Kits: https://www.fema.gov/homeland-security-grant-program

    That the use of all funds under this grant must support the goals and objectives included in the State Homeland Security Strategy and/or the Urban Area Homeland Security Strategy. Allocations and use of grant funds must also support the Investments identified in an Investment Justification, which may have been submitted as part of OKOHS's application for federal funding.

    To utilize grant funds for the furthering of the OKOHS State Strategy, the National Preparedness Guidelines and the DHS/FEMA defined National Priorities.

    To comply with grant closeout procedures established by OKOHS.

49. **Project Implementation:** The Sub-recipient agrees to implement and complete this project within the project period of the grant or be subject to forfeiture of grant funds.

    That this project will be administered by the local or state governmental entity having authority and responsibility for its completion and that such entity will ensure institutional, managerial and financial capability for proper planning, management and completion of approved projects.

    That the projects funded with this grant should demonstrate multi-disciplinary coordination of response efforts, including but not limited to: emergency medical services, emergency management, fire service, law enforcement, hazardous materials, public works, public health, health care facilities, military, government administration, private sector, citizens and communications.

50. **Property Control/Disposition:** Effective control and accountability must be maintained for all personal property. Sub-recipients must adequately safeguard all such property and must assure that it is used solely for authorized purposes. Sub-recipients should exercise caution in the use, maintenance, protection and preservation of such property.

    Title – Title to grant-funded equipment will continue to be held by the recipient or sub-recipient who purchase the equipment. The regulation establishes, however, that this title is a conditional title, meaning that the title is conditioned on the recipient or sun-recipient complying with the use, management and disposition requirements for the equipment in the 2 C.F.R § 200.313, and all other 2 C.F.R Part 200 requirements related to the property management that are applicable to equipment.

    Encumbering Equipment – Additionally, recipients and sub-recipients may encumber grant-funded equipment without prior approval from FEMA or the pass-through entity. Recipients with specific questions about encumbering equipment should refer to their program NOFO or contact their program Analyst.

51. **Protected Critical Infrastructure Information (PCII):** That Protected Critical Infrastructure Information (PCII) will be treated in a manner consistent with the Critical Infrastructure Information Act of 2002 (Public Law 107-296) (CII Act), which created a new framework, that enables State and local jurisdictions and members of the private sector to voluntarily submit sensitive information regarding critical infrastructure to DHS/FEMA. The Act also provides statutory protection for voluntarily shared CII from public disclosure and civil litigation. If validated as PCII, these documents can only be shared with authorized users who agree to safeguard the information. PCII accreditation is a formal recognition that the covered

government entity has the capacity and capability to receive and store PCII. DHS requires all State Administering Agencies (SAAs) to complete the PCII accreditation process. Accreditation activities include signing a memorandum of agreement (MOA) with DHS, appointing a PCII Officer, and implementing a self-inspection program.

52. **Publications:** That all publications created with funding under this grant shall prominently contain the following statement: "This Document was prepared under a grant from the Federal Emergency Management Administration (FEMA) Grant Programs Directorate (GPD), U.S. Department of Homeland Security (DHS). Points of view or opinions expressed in this document are those of the authors and do not necessarily represent the official position or policies of FEMA/GPD or DHS."

53. **Recording and Documentation of Receipts and Expenditures:** Sub-recipient's accounting procedures must provide for accurate and timely recording of receipt of funds by source of expenditures made from such funds and unexpended balances. These records must contain information pertaining to grant awards, obligations, unobligated balances, assets, liabilities, expenditures and program income. Controls must be established which are adequate to ensure that expenditures charged to the sub-grant activities are for allowable purposes. Additionally, effective control and accountability must be maintained for all grant cash, real and personal property and other assets. Accounting records must be supported by such source documentation as cancelled checks, paid bills, payrolls, time and attendance records, contract documents, grant award documents, etc.

54. **Rehabilitation Act of 1973 (Article XXX):** All recipients must comply with the requirements of Section 504 of the Rehabilitation Act of 1973, 29 U.S.C. § 794, as amended, which provides that no otherwise qualified handicapped individual in the United States will, solely by reason of the handicap, be excluded from participation in, be denied the benefits of, or be subjected to discrimination under any program or activity receiving Federal financial assistance. These requirements pertain to the provision of benefits or services as well as to employment.

55. **Reports:** To provide the required quarterly status reports and other information and documentation that may be requested by OKOHS.

    To cooperate with any assessments, national evaluation efforts, or information or data collection requests related to any activities within this project.

    To provide DHS/FEMA and OKOHS reasonable assistance with assessments conducted to (a) determine the existing level of preparedness within the Sub-recipient's jurisdiction; (b) determine the homeland security related needs of the jurisdiction, and (c) measure progress in achieving state and federal preparedness goals.

56. **Reporting Sub-awards and Executive Compensation (Article XV):** All recipients must report each action that obligates $25,000 or more in Federal funds that does not include Recovery funds (as defined in section 1512(a)(2) of the American Recovery and Reinvestment Act of 2009, Pub. L.111-5) for a sub-award to an entity, unless provided in paragraph D as required by 2 CFR Part 170, "Reporting Sub-award and Executive Compensation Information" and the Federal Funding Accountability and Transparency Act 2006 (FFATA). Recipients must register at www.sam.gov and report the information about each obligating action in accordance with the submission instructions posted at www.fsrs.gov.

57. **Retention of Records:** Any records relevant to the grant must be retained for at least three years following the termination date, which may be extended beyond the scheduled termination date, of the OKOHS/DHS/FEMA grant (OKOHS will provide the notice on the OKOHS web site under the grants section regarding the start date of this three year period). In accordance with the requirements set forth in the 2 C.F.R Part 200, all financial records, supporting documents, statistical records, and all other records pertinent to the award shall be retained by each organization for at least three years from the date of submission of the final expenditure report. In cases where litigation, a claim, or an audit is initiated prior to expiration of the three year period, records must be retained until completion of the action and resolution of issues or the end of the three year period, whichever is later. Retention is required for purposes of Federal examination and audit. Records may be retained in an electronic format.

58. **SAFECOM (Article XXVI):** All recipients who receive awards made under programs that provide emergency communication equipment and its related activities must comply with the SAFECOM Guidance for Emergency Communication Grants, including provisions on technical standards that ensure and enhance interoperable communications.

59. **Sanctions:** If a Sub-recipient materially fails to comply with the terms and conditions of an award, OKOHS or DHS/FEMA may take one or more of the following actions, as appropriate in the circumstances:

    - Temporarily withhold cash payments pending correction of the deficiency by the Sub-recipient.

- Disallow (that is, deny both use of funds and any applicable matching credit for) all or part of the cost of the activity or action not in compliance.
- Wholly or partly suspend or terminate the current award.
- Withhold future awards for the project or program.
- Pursue any other legal remedy that may be available.
- Require reassignment of any tangible or intangible items purchased with OKOHS grant funding to another local jurisdiction.

Prior to taking action, OKOHS will provide the Sub-recipient reasonable notice of intent to impose measures and will make efforts to resolve the problem informally.

60. **Terrorist Financing E.O. 13224 (Article XXVII):** All recipients must comply with U.S. Executive Order 13224 and U.S. law that prohibit transactions with, and the provisions of resources and support to, individuals and organizations associated with terrorism. It is the legal responsibility of recipients to ensure compliance with the E.O. and laws.

61. **Title VI of the Civil Rights Act of 1964 (Article VIII):** All recipients must comply with the requirements of Title VI of the Civil Rights Act of 1964 (42 U.S.C. § 2000d et seq.), which provides that no person in the United States will, on the grounds of race, color, or national origin, be excluded from participation in, be denied the benefits of, or be subjected to discrimination under any program or activity receiving Federal financial assistance. Implementing regulations for the Act are found at 6 CFR Part 21 and 44 CFR Part 7.

62. **Title IX of the Education Amendments of 1972 (Equal Opportunity in Education Act)(Article XXVIII):** All recipients must comply with the requirements of Title IX of the Education Amendments of 1972 (20 U.S.C. § 1681 et seq.), which provides that no person in the United States will, on the basis of sex, be excluded from participation in, be denied the benefits of, or be subjected to discrimination under any educational program or activity receiving Federal financial assistance. These regulations are codified at 6 CFR Part 17 and 44 CFR Part 19

63. **Trafficking Victims Protection Act of 2000 (Article XXIX):** All recipients must comply with the requirements of the government-wide award term which implements Section 106(g) of the Trafficking Victims Protection Act (TVPA) of 2000, as amended (22 U.S.C. § 7104). This is implemented in accordance with OMB Interim Final Guidance, Federal Register, Volume 72, No. 218, November 13, 2007. Full text of the award term is located at 2 CFR § 175.15.

64. **Training:** All requested or relevant training records of Sub-recipients must be submitted to the OKOHS Training and Exercise Coordinator.

65. **Unauthorized Expenditures:** Examples of **unauthorized expenditures** include but are not limited to:

    - Hiring of Public Safety Personnel
    - General use equipment including but not limited to items jurisdictions would normally be expected to have.
    - Items not pre-approved by OKOHS
    - Exercise related costs for non expendable equipment items (e.g., electronic messaging signs) and/or vehicle/emergency response apparatus costs (other than the cost of fuel/gasoline, which is allowable)

66. **Universal Identifier and System of Award Management (Article XXXI):** All recipients must maintain the currency of the information in the SAM until submission of the final financial report required under the award or receive final payment, whichever is later, as required by 2 C.F.R. Part 25.

67. **USA Patriot Act of 2001(Article XXXII):** All recipients must comply with the requirements of the Uniting and Strengthening America by Providing Appropriate Tools Required to Intercept and Obstruct Terrorism Act (USA PATRIOT Act), which amends 18 U.S.C. §§ 175-175c. Among other things, the USA PATRIOT Act prescribes criminal penalties for possession of any biological agent, toxin, or delivery system of a type or in a quantity that is not reasonably justified by a prophylactic, protective, bona fide research, or other peaceful purpose.

68. **Utilization of Minority Businesses:** Sub-recipients are encouraged to utilize qualified minority firms where cost and performance of major contract work will not conflict with funding or time schedules.

69. **Whistleblower Protection Act (Article XXXV):** All recipients must comply with the statutory requirements for whistleblower protections (if applicable) at 10 U.S.C § 2409, 41 U.S.C. 4712, and 10 U.S.C. § 2324, 41 U.S.C. §§ 4304 and 4310.

70. **Written Approval of Changes:** Sub-recipient must notify OKOHS in writing of any events or changes requiring adjustment in the grant award. Examples include but are not limited to: changes of address, project manager, project site, budget categories or scope.

Authorized Official:

Stewart Hoffman, Mayor
Name *Please type or print*

Signature

Date

Oklahoma Office of
Homeland Security
Prevent, Protect, Prepare

P.O. Box 11415
Oklahoma City, OK 73136
(405) 425-7296 Office • (405) 425-7295 Fax
www.homelandsecurity.ok.gov

SIGNATURE AUTHORIZATION

Required to sign all OKOHS subgrant documents

PROJECT CONTACT/SECONDARY AUTHORIZED OFFICIAL INFORMATION

PRINT Name James Dalton			
Title Emergency Management Director			
Agency City of Durant, OK - BryanCounty, OK.			
Mailing Address 2808 Enterprise Boulevard - Durant		State OK	Zip 74701
Phone # 580.924.3661	Fax # 580.924.8360	Email jdalton@durant.org	

James Dalton, EM Director — Primary Contact Signature

August 8, 2016 — Date

OPTIONAL Secondary Contact

Authorized to sign subgrant documents? [X] **Yes** [ ] **No**
(If "yes," please sign below)

PRINT Name Kenneth Eppler	Title / Agency Deputy Director - Durant / Bryan County Emergency Management
Email keppler@durant.org	Phone # 580.924.3661

Secondary Contact Signature

August 8, 2016 — Date

AGENCY/JURISDICTION CHIEF EXECUTIVE OFFICER – PRIMARY AUTHORIZED OFFICIAL INFORMATION

City or County Official (Mayor, City Manager, County Commissioner)

I hereby authorize the individual(s) identified above to act on my behalf in coordination with the Oklahoma Office of Homeland Security (OKOHS) and to sign all documentation related to this subgrant.

PRINT Chief Executive Officer Name Stewart Hoffman	OKOHS Award # 750.067	
Title Mayor, City of Durant, OK	Phone # 580.931.6605	
Jurisdiction (City, County, etc.) City of Durant, OK	Email shoffman@durant.org	
Mailing Address 300 W. Evergreen	State OK	Zip 74701

Chief Executive Officer Signature

Date

Form Revised as of: September 10, 2007

If any of the above information changes please submit a new ***SIGNATURE AUTHORIZATION FORM*** *to OKOHS immediately.*

Agenda Item: 1.o.

The City of Durant

Office of Community Development

Memorandum

Date:	8/31/2016
To:	Mayor and City Council
From:	Marty Cook
Re:	Consider Approval of Contract (C-2016-67) with Interact/Harris for 911 Addressing and Mapping

---

This Contract (C-2016-67) is a Renewal of a Long Standing Relationship with Interact/Harris for the 911 Addressing and Mapping of Bryan County and The City of Durant.

The Terms of the Contract and the Negotiated Price are Unchanged from the previous year.

Council Information / Action Requested

Approve / Deny Contract C-2016-67

City Staff Information / Action Follow-up, if Council authorizes this action:

City Clerk to Obtain Signatures
City Clerk to File Contract in Appropriate Manner

ATTACHMENTS:

Description	Type	Upload Date
Interact Contract	Cover Memo	8/31/2016

C-2016-67

CALIBER
Public Safety

GIS Quotation/Sales Order

Date: 8/01/16

Customer: City of Durant, OK

Attn: Aaron Walkup

Address: 300 W Evergreen

City/State/Zip: Durant, OK 74701

Phone: (580) 931-6622

Email: awalkup@durant.org

Description of Project Services to be performed ("Project"): The following Quotation/Sales order includes such steps as necessary to provide Bryan County, OK with a complete map maintenance solution consisting of one (1) year of bi-monthly (once every two months) GIS map maintenance.

This Quotation/Sales Order, hereinafter known as "Sales Order," is based on all work and costs included on a per hour basis to perform the Project described above. This Sales Order is based on information provided by the Customer and the scope of work to be provided as outlined in the Technical Proposal section of this Sales Order. Any increase or change in the scope of work must be agreed upon in writing between the Customer and InterAct. Such scope of work changes will likely result in schedule and Project costs changes. Any timelines quoted do not represent any delays in time due to acts of God (such as inclement weather) or receiving requested feedback from the Customer. At InterAct's discretion, a more detailed schedule and timeline will be developed in conjunction with the Project Manager upon signing of the Sales Order. InterAct makes no data or spatial accuracy claims. Pricing is valid for 60 days from the date of this Sales Order.

Technical Proposal

InterAct's GIS Maintenance is designed to provide Bryan County with complete map maintenance solution on a bi-monthly basis for one (1) year.

InterAct's GIS Maintenance will provide GPS field collection once every two months for up to 45 structures along with implementation into Bryan County's master GIS database. The first collection period will take place in November of 2016 with the last collection period to take place in September of 2017.

Once InterAct updates the master GIS database, it will be transferred and loaded into the Bryan County dispatch center for utilization in InterActGIS map display.

Statement of Work Responsibilities

This section lists the responsibilities upon which this Statement of work is based, defines the tasks to be performed by InterAct and Customer.

Requested changes to this Statement of Work will be processed in the form of authorized written Change Orders. Investigation and implementation of changes may result in changes in the estimated schedule, charges, or other terms of this Statement of Work.

The data to be delivered consists of bi-monthly new address GPS collection to include updated road centerline file and updated structure point file.

GIS Quotation/Sales Order

InterAct's Responsibilities:

- Receive new addresses to be collected from City of Durant/Bryan County via email attachment in Excel format.
- Prepare new addresses to be collected.
- Travel to Bryan County on or within one week of the 15th every other month (total of 6 times) for one (1) year and perform GPS data collection. The first data collection will take place in November 2016 with the last collection to take place in September 2017.
- GPS collect new addresses provided by City of Durant/Bryan County.
- Process newly collected GPS data and merge into existing Bryan County GIS map data.
- Provide updated information to City of Durant/Bryan County via email.
- Remotely update Bryan County dispatch Map Display Projects.
- Provide reports to Bryan County for dispersion to Telco's for implementation of required data if applicable (i.e. new roads).

Customer's Responsibilities:

Customer will provide InterAct with the following in order to carry out the Project:

- Provide new addresses to be collected for each bi-monthly collection period.
- Bryan County residents must have driveways clearly marked by two (2) wooden stakes. Stake placement shall be one on each side of the driveway (or driveway location to be), where easily viewable from intersecting road.
- Any resident location that cannot be found will be the responsibility of Bryan County to discern and will be GPS collected and addressed the following bi-monthly period.
- Bryan County will require all residents to provide adequate information to allow InterAct quick discernment of the new address location. This information will include address location, road name (per County road signs), road intersections on both ends of the road in which request is made, and placement of wooden stakes.
- Update CAD MSAG as applicable.
- Notify residents of new addresses.

The Customer will be responsible for the identification and interpretation of any applicable laws, regulations, statutes and ordinances concerning road names.

Payment Schedule

InterAct shall submit invoices to Customer for payment upon completion of each of the following payment milestones:

November 2016 Collection/Implementation (Part #DS-MAP-DATA)	$4,000
January 2016 Collection/Implementation (Part #DS-MAP-DATA)	$4,000
March 2017 Collection/Implementation (Part #DS-MAP-DATA)	$4,000
May 2017 Collection/Implementation (Part #DS-MAP-DATA)	$4,000
July 2017 Collection/Implementation (Part #DS-MAP-DATA)	$4,000
September 2017 Collection/Implementation (Part #DS-MAP-DATA)	$4,000

GIS Quotation/Sales Order

Total Project Cost $24,000

This Sales Order and the prices quoted herein are issued under and incorporated into the Project Services Terms and Conditions, attached hereto and made a part hereof. Customer's signature below acknowledges its agreement to said terms and conditions. Any applicable sales tax due will be charged for services delivered in a jurisdiction wherein they are due. Sales tax will be added to an invoice at the time of issuance.

Sales Order Acceptance:

COLOSSUS, Incorporated d/b/a
InterAct Public Safety

By: _____

Name: _____

Title: _____

Date: _____

CUSTOMER: City of Durant, OK

By: _____

Name: _____

Title: _____

Date: _____

CALIBER
Public Safety

GIS Quotation/Sales Order

PROJECT SERVICES – TERMS & CONDITIONS

The Parties hereby agree the following terms and conditions shall govern the Project Services to be delivered by InterAct to Customer as described in the attached Sales Order. InterAct represents that it has the expertise, knowledge, ability, and is qualified to render certain Project Services and that it is willing to provide such Project Services under the terms and conditions contained herein for a sum of no less than the Total Project Cost.

Terms & Termination: The term of this Agreement will commence upon the Effective Date and shall continue until the Project Services described herein have been fulfilled and Customer's full and complete payment has been received by InterAct ("Term"). Customer, in consideration of the services to be provided to Customer, agrees to pay InterAct the prices set forth herein with regard to Project Services described in the attached Sales Order. Payment for all Project Services furnished to Customer during the contract period shall be made in accordance with the Payment Schedule outlined in the attached Sales Order. The total purchase price of the Project Services ordered shall be paid either by cashier's check, or by Customer check, wire transfer or credit card, unless the Parties agree otherwise in writing. All amounts are due thirty (30) days from date of invoice. In the event of default in any payment, Customer agrees to reimburse to InterAct, InterAct's costs of collection including but not limited to reasonable attorney's fees and costs. Modifications of this Sales Order must be in writing and executed by both Parties prior to such change actually becoming affective. Customer may, at their convenience and with thirty (30) days written notice to InterAct, terminate the Project Services prior to the expiration of the Term ("Early Termination"). If such Early Termination is requested by Customer, Customer agrees that the bi-monthly price of the Project Services set forth on the attached Sales Order will increase to $4,670 per bi-monthly invoice, and InterAct may invoice, and Customer agrees to pay, for the difference of $670 per bi-monthly invoice previously invoiced through the date of Early Termination, which for purposes of clarification, will be the expiration of the 30-day written notice period.

Confidential Information: The Parties agrees to maintain in strict confidence and, except as provided herein, not to disclose, reproduce or copy any materials, or specifications which are marked confidential or proprietary and are provided to either Party hereunder.

Warranty: InterAct warrants that it shall perform its services as described in the Sales Order in a professional manner, using that degree of care and skill ordinarily exercised by and consistent with the standards of competent contractors, and in accordance with the practice of the industry, exercising competent professional knowledge, judgment, and skill. InterAct's obligations hereunder and liability, if any, shall be limited to the Customer and no third party may make claims based upon this Sales Order, regardless of the basis or legal theory of such claims.

Delivery & Acceptance of Project Services: The Parties explicitly agree that Customer will own all data resulting from the Project Services and provided by InterAct to Customer in accordance with the Sales Order, attachments and amendments made hereto, and Customer is entitled to use all data as it deems appropriate. Furthermore, both Parties expressly recognize that all data provided under the Sales Order may be located at various sites throughout the Customer's agency, and can be so distributed at Customer's discretion. The Parties agree that InterAct may use the data for demonstration purposes unless the Customer advises InterAct otherwise in writing.

Force Majeure: Neither Party shall be liable to the other party for any alleged loss or damages resulting from delays in performance (including for InterAct, loss or damages resulting from delivery of the Products being delayed) caused by any act of God, fire, casualty, flood, war, failure of public utilities, injunction or any act, exercise, assertion or requirement of governmental authority, earthquake, labor strike, riot, accident, shortage, delay in transportation or any other cause beyond the reasonable control of the party invoking this provision, and if such party shall have used its best efforts to avoid such occurrence and minimize its duration and has given prompt written notice to the other party, then the affected party's performance shall be excused and the time for performance shall be extended for the period of delay or inability to perform due to such occurrence.

Governing Law: This Contract shall be governed by the laws of the State of North Carolina. Any disputes hereunder will be heard in the appropriate federal and state courts located in Forsyth County, North Carolina.

Entire Agreement: This Sales Order supersedes any or all other agreements or understandings (oral or written) between the Parties hereto with respect to the subject matter hereof, and no other agreement, statement or provision related to the Project Services which is not contained herein shall be valid or binding.

The City of Durant

Office of Community Development

Memorandum

Date: 8/31/2016
To: Mayor and City Council
From: Marty Cook
Re: Consider Approval of RFAP (2016-153) for the Purchase of Services with Interact/Harris

---

This RFAP (2016-153) is for the Payment of Services of Interact/Harris and the 911 Addressing and Mapping for Bryan County and the City of Durant.

This RFAP (2016-153) is for the Approved Contract (C-2016-67).

Council Information / Action Requested

Approve / Deny RFAP (2016-153)

City Staff Information / Action Follow-up, if Council authorizes this action:

Finance to Prepare Purchase Order
Aaron Walkup to Provide Purchase Order to Vendor

ATTACHMENTS:

Description	Type	Upload Date
Interact RFAP	Cover Memo	8/31/2016

R02122015

SPEND/CNTRCT#
INCODE PROJ#
RFAP#2016-153

REQUEST FOR AUTHORIZATION TO PURCHASE

Ref: 11 O.S. §10:114 (B) and 61 O.S. §103 (D) and & City of Durant Code: § 37.003-37.010

Item #

1 Item planned for spending (provide details):
GEOGRAPHICAL INFORMATION SERVICES (GIS) 911 ADDRESSING AND MAPPING, CONTRACT #C-2016-67

2 Department requesting authorization:
911 COMMUNICATIONS CENTER

3 Bidding recommendation (award or reject along with name and contact information of vendor):
INTERACT/HARRIS CONTRACT #C-2016-67

4 Estimated Purchase Date (M/D/Y): 11/1/2016 - 9/1/2017

5 What are the financing or lease purchase terms (APR %, length of financing, payments, etc.)

6 Is this item included in the current FY budget (Yes/No) Yes

7 GL account code: #101-007-527-30-35

8 Spending / purchase request details (complete below blanks):

8a Amount requested to spend $24,000.00

8b Item (new or replacement, if a capital item complete fixed asset form)? New

8c Old Item to be Traded-In (Yes / No). Note: if a capital item complete fixed asset form? No

If a Replacement Item, give description, age and condition of item to be replaced (including model & serial or VIN, trade allowance)

8d Is a contractor written agreement involved (Yes / No), if yes include a copy of the contract after City Attorney Review Yes

8e Does the purchase involve Grant Funding (Yes or No) No

8f What is the City Cash Match for the Grant $

8g What other match or financial obligation is involved with the City accepting this Grant (explain with details)

9 Purchase is Planned By (complete appropriate item(s) below):

9a **Informal Quotes** – Purchases of $2000-$15,000 City Manager approval required. Purchases with an estimated cost over $15,000 use formal bids. Specifications & at least 3 quotes must be attached for items over $5,000 (city manager can require quotes for below $5,000):

9b **Formal Bids** – Purchases with an estimated cost over $15,000 Council approval required. Attach complete specifications and a bidders list with at least 3 bidders. Include bidder name, address, phone number, fax number and email address of recommended vendor:

9c **State Contract** – Purchases of $2,000-$15,000 City Manager approval required. Purchases over $15,000 Council approval required. Include name, address, phone number, fax number, email address of state contract vendor and state contract number:

9d **Buy Board** – Purchases of $2,000-$15,000 City Manager approval required. Purchases more than $15,000 Council approval required. Include name, address, phone number, fax number, email address of Buy Board:

9e **Professional Services Agreement** – Purchases over $2,000 and less than $15,000 via an engineering, surveying, architect, computer services, janitorial, etc. firm covered by a council approved professional services agreement, City Manager approval required.

THIS IS A SERVICE PROVIDED BY OUR CURRENT COMPUTER AIDED DISPATCH (CAD) VENDOR WHERE IN THE FIELD MAPPING SERVICES ARE RENDERED, PLOTTED AND UPLOADED TO THE 911 MAPPING ON A BI-MONTHLY SCHEDULE. A COPY OF THE CONTRACT TO BE SIGNED IS ATTACHED.

9f **Emergency Purchase** – To be utilized only when immediate action must be taken to protect the public health or safety or to prevent damage to property, prior council approval not required. Notify the City Manager immediately that an emergency purchase is needed.

9g **Sole Source Purchase** – Purchases of $2,000-$15,000 City Manager approval required. Purchases with an estimated cost over $15,000 Council approval required in addition to City Manager approval. Attach to this request a memo detailing the nature of the Sole source designation, that is explain how this purchase fulfills the requirements to be considered a sole source purchase:

10 Signature & date blocks (complete appropriate sections):

10a Signature of Grants Administrator (if applicable) — date (M/D/Y): 8/5/16

10b Signature Department Head — date (M/D/Y):

10c Signature of Division Head — date (M/D/Y): 8-4-16

10d Signature of Budget Administrator — date (M/D/Y): 8/4/16

10e Signature of Finance Manager — date (M/D/Y): 8-5-16

10f Signature of City Manager (only over $2,000) — date (M/D/Y): 8-4-2016

10g Signature of City Treasurer (date) — date (M/D/Y):

11h City Manager Comments:

C-2016-67

CALIBER Public Safety

GIS Quotation/Sales Order

Date: 8/01/16

Customer: City of Durant, OK

Attn: Aaron Walkup

Address: 300 W Evergreen

City/State/Zip: Durant, OK 74701

Phone: (580) 931-6622

Email: awalkup@durant.org

Description of Project Services to be performed ("Project"): The following Quotation/Sales order includes such steps as necessary to provide Bryan County, OK with a complete map maintenance solution consisting of one (1) year of bi-monthly (once every two months) GIS map maintenance.

This Quotation/Sales Order, hereinafter known as "Sales Order," is based on all work and costs included on a per hour basis to perform the Project described above. This Sales Order is based on information provided by the Customer and the scope of work to be provided as outlined in the Technical Proposal section of this Sales Order. Any increase or change in the scope of work must be agreed upon in writing between the Customer and InterAct. Such scope of work changes will likely result in schedule and Project costs changes. Any timelines quoted do not represent any delays in time due to acts of God (such as inclement weather) or receiving requested feedback from the Customer. At InterAct's discretion, a more detailed schedule and timeline will be developed in conjunction with the Project Manager upon signing of the Sales Order. InterAct makes no data or spatial accuracy claims. Pricing is valid for 60 days from the date of this Sales Order.

Technical Proposal

InterAct's GIS Maintenance is designed to provide Bryan County with complete map maintenance solution on a bi-monthly basis for one (1) year.

InterAct's GIS Maintenance will provide GPS field collection once every two months for up to 45 structures along with implementation into Bryan County's master GIS database. The first collection period will take place in November of 2016 with the last collection period to take place in September of 2017.

Once InterAct updates the master GIS database, it will be transferred and loaded into the Bryan County dispatch center for utilization in InterActGIS map display.

Statement of Work Responsibilities

This section lists the responsibilities upon which this Statement of work is based, defines the tasks to be performed by InterAct and Customer.

Requested changes to this Statement of Work will be processed in the form of authorized written Change Orders. Investigation and implementation of changes may result in changes in the estimated schedule, charges, or other terms of this Statement of Work.

The data to be delivered consists of bi-monthly new address GPS collection to include updated road centerline file and updated structure point file.

GIS Quotation/Sales Order

InterAct's Responsibilities:

- Receive new addresses to be collected from City of Durant/Bryan County via email attachment in Excel format.
- Prepare new addresses to be collected.
- Travel to Bryan County on or within one week of the 15th every other month (total of 6 times) for one (1) year and perform GPS data collection. The first data collection will take place in November 2016 with the last collection to take place in September 2017.
- GPS collect new addresses provided by City of Durant/Bryan County.
- Process newly collected GPS data and merge into existing Bryan County GIS map data.
- Provide updated information to City of Durant/Bryan County via email.
- Remotely update Bryan County dispatch Map Display Projects.
- Provide reports to Bryan County for dispersion to Telco's for implementation of required data if applicable (i.e. new roads).

Customer's Responsibilities:

Customer will provide InterAct with the following in order to carry out the Project:

- Provide new addresses to be collected for each bi-monthly collection period.
- Bryan County residents must have driveways clearly marked by two (2) wooden stakes. Stake placement shall be one on each side of the driveway (or driveway location to be), where easily viewable from intersecting road.
- Any resident location that cannot be found will be the responsibility of Bryan County to discern and will be GPS collected and addressed the following bi-monthly period.
- Bryan County will require all residents to provide adequate information to allow InterAct quick discernment of the new address location. This information will include address location, road name (per County road signs), road intersections on both ends of the road in which request is made, and placement of wooden stakes.
- Update CAD MSAG as applicable.
- Notify residents of new addresses.

The Customer will be responsible for the identification and interpretation of any applicable laws, regulations, statutes and ordinances concerning road names.

Payment Schedule

InterAct shall submit invoices to Customer for payment upon completion of each of the following payment milestones:

November 2016 Collection/Implementation (Part #DS-MAP-DATA)	$4,000
January 2016 Collection/Implementation (Part #DS-MAP-DATA)	$4,000
March 2017 Collection/Implementation (Part #DS-MAP-DATA)	$4,000
May 2017 Collection/Implementation (Part #DS-MAP-DATA)	$4,000
July 2017 Collection/Implementation (Part #DS-MAP-DATA)	$4,000
September 2017 Collection/Implementation (Part #DS-MAP-DATA)	$4,000

GIS Quotation/Sales Order

Total Project Cost $24,000

This Sales Order and the prices quoted herein are issued under and incorporated into the Project Services Terms and Conditions, attached hereto and made a part hereof. Customer's signature below acknowledges its agreement to said terms and conditions. Any applicable sales tax due will be charged for services delivered in a jurisdiction wherein they are due. Sales tax will be added to an invoice at the time of issuance.

Sales Order Acceptance:

COLOSSUS, Incorporated d/b/a
InterAct Public Safety

By: _____

Name: _____

Title: _____

Date: _____

CUSTOMER: City of Durant, OK

By: _____

Name: _____

Title: _____

Date: _____

GIS Quotation/Sales Order

PROJECT SERVICES – TERMS & CONDITIONS

The Parties hereby agree the following terms and conditions shall govern the Project Services to be delivered by InterAct to Customer as described in the attached Sales Order. InterAct represents that it has the expertise, knowledge, ability, and is qualified to render certain Project Services and that it is willing to provide such Project Services under the terms and conditions contained herein for a sum of no less than the Total Project Cost.

Terms & Termination: The term of this Agreement will commence upon the Effective Date and shall continue until the Project Services described herein have been fulfilled and Customer's full and complete payment has been received by InterAct ("Term"). Customer, in consideration of the services to be provided to Customer, agrees to pay InterAct the prices set forth herein with regard to Project Services described in the attached Sales Order. Payment for all Project Services furnished to Customer during the contract period shall be made in accordance with the Payment Schedule outlined in the attached Sales Order. The total purchase price of the Project Services ordered shall be paid either by cashier's check, or by Customer check, wire transfer or credit card, unless the Parties agree otherwise in writing. All amounts are due thirty (30) days from date of invoice. In the event of default in any payment, Customer agrees to reimburse to InterAct, InterAct's costs of collection including but not limited to reasonable attorney's fees and costs. Modifications of this Sales Order must be in writing and executed by both Parties prior to such change actually becoming affective. Customer may, at their convenience and with thirty (30) days written notice to InterAct, terminate the Project Services prior to the expiration of the Term ("Early Termination"). If such Early Termination is requested by Customer, Customer agrees that the bi-monthly price of the Project Services set forth on the attached Sales Order will increase to $4,670 per bi-monthly invoice, and InterAct may invoice, and Customer agrees to pay, for the difference of $670 per bi-monthly invoice previously invoiced through the date of Early Termination, which for purposes of clarification, will be the expiration of the 30-day written notice period.

Confidential Information: The Parties agrees to maintain in strict confidence and, except as provided herein, not to disclose, reproduce or copy any materials, or specifications which are marked confidential or proprietary and are provided to either Party hereunder.

Warranty: InterAct warrants that it shall perform its services as described in the Sales Order in a professional manner, using that degree of care and skill ordinarily exercised by and consistent with the standards of competent contractors, and in accordance with the practice of the industry, exercising competent professional knowledge, judgment, and skill. InterAct's obligations hereunder and liability, if any, shall be limited to the Customer and no third party may make claims based upon this Sales Order, regardless of the basis or legal theory of such claims.

Delivery & Acceptance of Project Services: The Parties explicitly agree that Customer will own all data resulting from the Project Services and provided by InterAct to Customer in accordance with the Sales Order, attachments and amendments made hereto, and Customer is entitled to use all data as it deems appropriate. Furthermore, both Parties expressly recognize that all data provided under the Sales Order may be located at various sites throughout the Customer's agency, and can be so distributed at Customer's discretion. The Parties agree that InterAct may use the data for demonstration purposes unless the Customer advises InterAct otherwise in writing.

Force Majeure: Neither Party shall be liable to the other party for any alleged loss or damages resulting from delays in performance (including for InterAct, loss or damages resulting from delivery of the Products being delayed) caused by any act of God, fire, casualty, flood, war, failure of public utilities, injunction or any act, exercise, assertion or requirement of governmental authority, earthquake, labor strike, riot, accident, shortage, delay in transportation or any other cause beyond the reasonable control of the party invoking this provision, and if such party shall have used its best efforts to avoid such occurrence and minimize its duration and has given prompt written notice to the other party, then the affected party's performance shall be excused and the time for performance shall be extended for the period of delay or inability to perform due to such occurrence.

Governing Law: This Contract shall be governed by the laws of the State of North Carolina. Any disputes hereunder will be heard in the appropriate federal and state courts located in Forsyth County, North Carolina.

Entire Agreement: This Sales Order supersedes any or all other agreements or understandings (oral or written) between the Parties hereto with respect to the subject matter hereof, and no other agreement, statement or provision related to the Project Services which is not contained herein shall be valid or binding.

Agenda Item: 1.q.

The City of Durant

Durant Police Department

Memorandum

Date: 8/31/2016
To: Mayor and City Council
From: David Houser, Chief of Police
Re: Consider Change Order For Digiticket Contract C-2015-72

Digiticket by Saltus Technolgy is an electronic citation system being implemented via contract C-2015-72. The original contract was for six (6) handheld devices and approved January 2016.

I would like to propose the number of devices be increased to ten (10). This would allow each officer on shift to have a device available to them, additional devices for officers working a grant assignment, and in most instances have one available for animal control and code enforcement as well.

The device expense is designed to be self sufficient based upon City ordinance 1763 which dollars through court are collected for a "Technology Fee".

By increasing the number of devices from six to ten, the cost per device per month decreases from $230 to $205 each. Although a cost saving per device, the total monthly fee increases from $1380/month to $2050/month; an additional $670 per month or a yearly cost increase of $8040. The total cost of ten devices is $20,500 for the remainder of this fiscal year.

Currently the expense GL account 001-013-512.30-79 is budgeted $47,595; a figure based on ten devices @ $230/ea plus interace fees to the court and police systems.

Currently, the revenue generated by the ordinance averages more than $2400 per month; more than the $2050 needed to fund ten devices.

Council Information / Action Requested

Council / Consider Approval

City Staff Information / Action Follow-up, if Council authorizes this action:

Chief of Police / Sign change order and submit

Clerk / Attach Change Order to Original Contract
Police Department / Submit Purchase Order Request
Finance / Create Purchase Order
AP / Receive and Pay Monthly Invoices

ATTACHMENTS:

Description	Type	Upload Date
C-2015-72 Original Contract	Cover Memo	8/31/2016
C-2015-72 Change Order	Cover Memo	8/31/2016

C-2015-72

digiTICKET®
electronic ticketing solution

digiTICKET as a Service Agreement for the:

City of Durant, OK
Interim Chief David Houser

November 5, 2015

SALTUS TECHNOLOGIES

Prepared by:
Cory Box
Sales Manager
918.392.3912

Saltus Technologies
907 South Detroit, Suite 820
Tulsa, OK 74120

digiTICKET™
electronic ticketing solution

To date Saltus Technologies is the only national eCitation provider to continually offer their solution as a monthly service offering. Known as digiTICKET as a service or "dSaaS", the monthly service offers no upfront cost, no lengthy contract term, and includes the entire turnkey solution rolled into a low monthly fee per unit. Additional units can be added at any time with just a slight adjustment to the monthly invoice. More than half of our Oklahoma customers are using this option and many consider it a justification for sole sourcing our product and avoiding RFP's and competitive bid situations.

THIS DIGITICKET AS A SERVICE AGREEMENT ("Agreement") is entered into between Saltus Technologies, LLC ("Saltus"), and the City of Durant, Oklahoma ("Customer"). Subject to the terms and conditions set forth herein, the parties agree as follows:

1.0 digiTICKET AS A SERVICE PRICING

The digiTICKET Solution is a mobile software application that automates the process of writing and processing citations for law enforcement agencies using mobile software running on handheld computers, tablets or laptops. The digiTICKET as a Service includes hardware, digiTICKET software, implementation services provided by Saltus and hosting services. The price and fees for the digiTICKET as a Service shall be as follows:

"digiTICKET as a Service" Price Quote			
Item Description	Units	Per Unit	Total Per Month
Handheld Units	6	$ 230	$ 1,380
Laptop Units	0	$ 175	$ -
		Monthly Subtotal:	$ 1,380
		Total Monthly Fee:	$ 1,380
Server and Client Software License Fees			Included
InSynch & Incode data exports			Included
Ticket approval or "process" tab			Included
All Implementation and Training Services Fees			Included
All Required Hardware (devices, cables, docks, mounts, etc.)			Included
Customization of Printed Ticket			Included
Ticket Paper and other Consumables			Included
Web Application Hosting Fee			Included
Annual Software Maintenance and 24/7 Support Fee			Included
Convert software to a laptop based environment (optional & potential future cost)			$2,000

digiTICKET as a Service is not a lease, but a "pay for use" model. It includes the following benefits:

- Zero up front cost for use of hardware, software, and standard implementation and training services. After training and deployment, Saltus will invoice for the first month of service.
- Customer pays a per-unit, per-month fee. Annual or semi-annual prepayment discounts shall apply.
  - If the Customer requires optional capabilities there is an upfront fee for these services (see Pricing above).

Copyright © 2015 Saltus Technologies, LLC All Rights Reserved

digiTICKET™
electronic ticketing solution

- Saltus owns the software and all equipment.
  - Saltus will replace defective equipment at no additional cost.
  - Saltus will refresh old equipment as its useful life ends as jointly agreed upon by Saltus and the Customer.
  - The Customer is responsible for lost, damaged or stolen equipment. In the event of a loss, Saltus will provide the Customer with new equipment and invoice the Customer for the residual value of the equipment based on a useful lifespan of 48 months.
- No contract term obligation – If the Customer is dissatisfied at any point with Saltus or digiTICKET, Customer can terminate this Agreement with no penalty by providing sixty (60) day written notice to Saltus and return all equipment.
- Additional units can be added or subtracted by Customer at any time with a corresponding adjustment to the monthly bill at the then current rates and fees.
- Customer may convert this digiTICKET as a Service Agreement to a Purchase Agreement if requested in writing by the Customer. Upon acceptance by Saltus, a portion the payments received by Saltus under this Agreement will be applied to the purchase price of the digiTICKET Solution. Percentages of received payments vary depending on number of payments made under this Agreement. 25% of total payments received by Saltus under this Agreement will be applied to the purchase of the digiTICKET Solution if such purchase is made after 6 months and less than 12 months from the date of this Agreement. 50% of total payments received by Saltus under this Agreement will be applied to the purchase of the digiTICKET Solution if such purchase is made after 12 months and less than 24 months from the date of this Agreement. 75% of total payments received by Saltus under this Agreement will be applied to the purchase of the digiTICKET solution if such purchase is made after 24 months from the date of this Agreement.

Copyright © 2015 Saltus Technologies, LLC All Rights Reserved

digiTICKET™
electronic ticketing solution

2.0 SCOPE OF THE AGREEMENT

Saltus will provide Customer with the digiTICKET electronic ticketing solution as a monthly service offering. The service offering will provide the following:

1. digiTICKET Software
    a. A digiTICKET software license for the term of the Agreement, including:
    b. The software license includes
        i. a single web server license which includes access to the administrative website
        ii. mobile client software licenses for ~~five (5)~~ Six (6) handheld computers. DH 8/15 1/14/16
            1. Additional client licenses can be purchase as needed
    c. The software will be provided as-is, configured for the Customer. This means no new functionality will be developed specifically for the Customer, unless otherwise agreed upon and included within the pricing section of this Agreement. However, the software will be configured specifically for the Customer. Configuration of software includes items such as:
        i. Updating the list of violations and bond amounts
        ii. Updating required fields on the mobiles software
        iii. Updating web server user permissions
        iv. Creating one custom report
        v. Creating at least one electronic data file export for integration with Court or Records Management System(s).
2. Software maintenance provided through periodic release updates to the Customer and server software for the term of this Agreement.
3. All hardware and consumables required to utilize the digiTICKET solution, including:
    a. Rugged, handheld ticket writers
    b. Rugged, mobile Bluetooth printers
    c. All necessary charging cables, docks, mounts, screen protectors and carrying cases
    d. Thermal printer paper
4. Hardware support and maintenance will be provided by Saltus, including:
    a. Replacement devices, due to normal wear and tear issues and mechanical failure
    b. Replacement devices when the Customer and Saltus mutually agree that the useful life of the devices have passed
    c. The Customer must reimburse Saltus for lost, damaged or stolen devices. Reimbursement amounts to be determined by Saltus based on purchase price and age of the device.
5. Implementation and training services will be provided to configure and deploy the digiTICKET solution for the Customer:
    - **Requirements Definition:** Saltus will facilitate a workshop with subject matter experts from various Customer departments to ensure that the digiTICKET Solution is configured specifically the way the Customer has requested.
    - **System Configuration:** Once all requirements are documented, digiTICKET is then configured to meet such requirements. This includes the setup of all ordinances, user roles and permissions, printed ticket formatting, mobile client configuration, report development, interface creation and testing, etc.

Copyright © 2015 Saltus Technologies, LLC All Rights Reserved

digiTICKET™
electronic ticketing solution

- User Acceptance Testing: Once configured, Saltus will then facilitate a user acceptance testing session in a classroom setting with key Customer personnel. This session is conducted to ensure that the system is configured as requested by the Customer.
- Training: digiTICKET is extremely easy to use. Training of each end user typically takes no more than two hours. Saltus' preference is a "Train the Trainer" approach which would include training the trainers as well as providing end user training to the satisfaction of the Customer. Training shall include:
  - Complete classroom, hands-on training
  - Train the Trainer accommodations for on-going training
  - User manual, classroom materials and tip sheets for users
- Deployment: After training, the digiTICKET Solution is deployed and Saltus then provides end user support and system maintenance and updates for the term of this Agreement.
- Support: The Customer will appoint up to two individuals as Primary Points of Contact (PPCs) who will serve as an interface between Saltus and the Customer.

Optional Professional Services

As part of this Agreement, the Customer will receive future product release upgrades for the term of this Agreement. However, if the Customer requires unique enhancements, integration services to back office systems or custom reports, Saltus has an experienced professional services team that can provide assistance at an additional charge.

If not separately priced, Saltus currently provides these services at $125 per hour. In addition, the Customer would be responsible for any travel and living expenses, which are billed at actual cost and only as preapproved by the Customer.

Miscellaneous

It is understood and agreed by the parties that:

- The Customer and Saltus will each appoint Project Leads for this project. The Project Leads will serve as the Primary Point of Contact (PPC) for the respective parties.
- The Customer will appoint Administrators that will train and provide first level support to Customer users. These individuals can be the same individual as the PPC if so desired.
- The Customer Administrators will be the single point of contact between Saltus Support Services and the Customer.
- Changes to project scope can affect time estimates required for implementation and will be mutually agreed to and confirmed in writing.
- Saltus may perform User Acceptance Testing and Training activities remotely utilizing webinar and teleconferencing technologies.
- Saltus will not provide installation services for vehicle docks or mounts.
- The Customer will provide a full-time Internet connection to facilitate the synchronization of tickets from the ticket writing devices to the digiTICKET server.
- Fees charged by Court or RMS system vendors are not included as part of this Agreement, and must be negotiated separately between the Customer and each respective vendor.
- The monthly fees set forth in this Agreement include services for configuring digiTICKET to meet Customer's ticketing specifications on the mobile units and the server application.
- Saltus will host the digiTICKET application.

Copyright © 2015 Saltus Technologies, LLC All Rights Reserved

digiTICKET™
electronic ticketing solution

3.0 digiTICKET SOFTWARE LICENSE

This Software License covers the Saltus software that is the subject of this Agreement, which includes computer software and may include associated media, printed materials, "online" or electronic documentation, and Internet-based services ("Software"). Customer agrees to be bound by the terms of this Section 3.0 by installing, copying, or otherwise using the Software.

1. GRANT OF LICENSE. SALTUS grants Customer the following rights provided that Customer complies with all terms and conditions of this Section 3.0: a) SALTUS grants to Customer a nonexclusive license to use copies of the Software, provided that for each individual using the Software within Customer's organization, Customer has acquired a separate and valid license for each user device as may be required by SALTUS. b) Customer may make and use an unlimited number of copies of any documentation, provided that such copies shall be used only for Customer's purposes pursuant to this Agreement and are not to be republished or distributed (either in hard copy or electronic form) beyond Customer premises. c) Customer may also store or install a copy of the Software on a storage device, such as a network server, used only to install or run the Software on computers used by a licensed end user in accordance with a) above. d) Software provided by SALTUS may not be distributed to any individual, third party or entity that exists external to Customer's organization or for any purpose other than use of the Software for Customer. e) Subject to the terms and conditions as specified herein, under the rights obtained from MacroSolve, Inc., and in SALTUS'S license under United States Patent Number 7,822,816, SALTUS grants to Customer during the Term of this Agreement a non-exclusive, non-transferable, non-assignable sublicense to use the Software.

2. RESERVATION OF RIGHTS AND OWNERSHIP. SALTUS reserves all rights not expressly granted to Customer in this Agreement. The Software is protected by copyright and other intellectual property laws and treaties. SALTUS owns the title, copyright, and other intellectual property rights in the Software. SALTUS is the holder of a perpetual license with the right to grant sublicenses to United States Patent Number 7,822,816 from MacroSolve, Inc. for use with the Software. The Software is licensed, not sold.

3. LIMITATIONS ON DECOMPILATION, AND DISASSEMBLY. Customer may not reverse engineer, decompile, or disassemble any Software provided in compiled or object code form, except and only to the extent that such activity is expressly permitted by applicable law notwithstanding this limitation.

4. NO RENTAL/COMMERCIAL HOSTING. Customer may not rent, lease, lend or provide commercial hosting services with the Software.

5. CONSENT TO USE OF DATA. Customer agrees that SALTUS and its affiliates may collect and use technical information gathered as part of the product support services provided to Customer, if any, related to the Software. SALTUS may use this information solely to improve our products or to provide customized services or technologies to Customer and will not disclose this information in a form that personally identifies Customer.

6. ADDITIONAL SOFTWARE/SERVICES. This Software License applies to updates, supplements and add-on components of the Software that SALTUS may provide to Customer or make available to Customer after the date Customer obtains the initial copy of the Software, unless SALTUS provides other terms along with the update, supplement, add-on component.

7. NOT FOR RESALE SOFTWARE. Software provided by SALTUS may not be sold or otherwise transferred for value, or used for any purpose other than Customer's application of the Software pursuant to this Agreement.

8. EXPORT RESTRICTIONS. Customer acknowledges that the Software is subject to U.S. export jurisdiction and agrees to comply with all applicable international and national laws that apply to the Software, including the U.S. Export Administration Regulations, as well as end-user, end-use, and destination restrictions issued by U.S. and other governments.

9. SOFTWARE TRANSFER & ASSIGNMENT. All rights to use of Software provided by this Agreement are for the sole use of Customer and may not be transferred, assigned, directly or indirectly without prior written authorization from SALTUS.

Copyright © 2015 Saltus Technologies, LLC All Rights Reserved

digiTICKET electronic ticketing solution

10. TERMINATION. Without prejudice to any other rights, SALTUS may terminate the Software License if Customer fails to comply with the terms and conditions of this Agreement. In such event, Customer shall destroy all copies of the Software and all of its component parts.

4.0 Other Terms

1. DISCLAIMER OF WARRANTIES. TO THE MAXIMUM EXTENT PERMITTED BY APPLICABLE LAW, SALTUS DISCLAIMS ANY IMPLIED WARRANTIES, DUTIES OR CONDITIONS OF MERCHANTABILITY, AND OF FITNESS FOR A PARTICULAR PURPOSE.

2. EXCLUSION OF DAMAGES. TO THE MAXIMUM EXTENT PERMITTED BY APPLICABLE LAW, IN NO EVENT SHALL SALTUS BE LIABLE FOR ANY SPECIAL, INCIDENTAL, PUNITIVE, INDIRECT, OR CONSEQUENTIAL DAMAGES WHATSOEVER.

3. LIMITATION OF LIABILITY AND REMEDIES. NOTWITHSTANDING ANY DAMAGES THAT CUSTOMER MIGHT INCUR FOR ANY REASON WHATSOEVER (INCLUDING, WITHOUT LIMITATION, ALL DAMAGES REFERENCED HEREIN AND ALL DIRECT OR GENERAL DAMAGES IN CONTRACT OR ANYTHING ELSE), THE ENTIRE LIABILITY OF SALTUS AND ANY OF ITS SUPPLIERS UNDER ANY PROVISION OF THIS AGREEMENT AND CUSTOMER'S EXCLUSIVE REMEDY HEREUNDER SHALL BE LIMITED TO THE GREATER OF THE ACTUAL DAMAGES CUSTOMER INCURS IN REASONABLE RELIANCE ON THE SOFTWARE UP TO THE AMOUNT ACTUALLY PAID BY CUSTOMER FOR USE OF THE SOFTWARE. THE FOREGOING LIMITATIONS, EXCLUSIONS AND DISCLAIMERS SHALL APPLY TO THE MAXIMUM EXTENT PERMITTED BY APPLICABLE LAW, EVEN IF ANY REMEDY FAILS ITS ESSENTIAL PURPOSE. CUSTOMER AGREES THAT THE PRICE UNDER THIS AGREEMENT WOULD BE SUBSTANTIALLY HIGHER BUT FOR THESE LIMITATIONS.

4. APPLICABLE LAW. Any contracts or agreements between SALTUS and Customer resulting from and including this Agreement and any other accompanying documents shall be controlled and interpreted in accordance with the laws of the State of Oklahoma and should any conflict arise concerning any terms of such agreements or contracts which results in litigation, the forum for such litigation and the venue thereof shall lie in the District court in and for Tulsa City, State of Oklahoma.

5. ENTIRE AGREEMENT; SEVERABILITY. This Agreement (including any addendum or amendment to this Agreement) are the entire agreement between Customer and SALTUS and supersede all prior or contemporaneous oral or written communications, proposals and representations with respect to the Software or any other subject matter covered by this Agreement. To the extent the terms of any SALTUS policies or programs conflict with the terms of this Agreement, the terms of this Agreement shall control. If any provision of this Agreement is held to be void, invalid, unenforceable or illegal, the other provisions shall continue in full force and effect.

Copyright © 2015 Saltus Technologies, LLC All Rights Reserved

digiTICKET™
electronic ticketing solution

5.0 SIGNATURE

Pricing

digiTICKET as a Service pricing (as defined above) is $1,380 per month.

Discounts for pre-payments are offered as follows:

- 6 months in advance – 1.25 % discount
- 12 months in advance – 2.5 % discount

Total one time interface and custom report fees are $0. These fees will be invoiced upon successful testing and deployment to the live system.

The Customer can add or remove units as needed. If total number used increases or decreases to a different pricing level, the total monthly fee will be adjusted by Saltus as necessary.

All invoices are NET 30.

Term and Termination

The term of this Agreement is five (5) years. However, the Customer may terminate this Agreement for any reason with 60 days prior written notice to Saltus. Upon termination, the Customer must return all equipment and unused paper. Upon such termination, provided the Customer is not in default under this Agreement, Saltus will refund prepayments pro-rated to reflect the termination date.

Either party may terminate this Agreement upon a default of the other party under this Agreement, provided such default remains uncured for thirty (30) days from the date of written notice from the non-defaulting party to the other party specifying such default.

Saltus reserves the right to increase future monthly pricing (on an annual basis) to reflect changes in costs of service offerings, etc.

Signatures

By signing and returning this document you are signifying the acceptance of the Agreement and the terms and conditions as outlined above. This Agreement can only be modified when both parties agree in writing.

Agreed to:	Agreed to:
City of Durant	Saltus Technologies, LLC
By: [signature]	By: _____
Name: Stewart Hoffman	Name: _____
Title: Mayor	Title: _____
Date: 1-12-2016	Date: _____

CITY OF DURANT OFFICIAL SEAL STATE OF OKLAHOMA

Copyright © 2015 Saltus Technologies, LLC All Rights Reserved

digiTICKET™
electronic ticketing solution

6.0 CUSTOMER CONTACT FORM

Purchase Order Number: 1654424

Tax Exempt Certificate Number: FEI 736005186

Primary Contact:

Name: DAVID HOUSER or Mike Woodruff

Address: 3104 Carl Albert Drive

City: DURANT State OK Zip 74701

Phone: 580-924-3737

Email: dhouser@durant.org

Billing Contact: City of Durant

Name: Pam Adair - Accounts Payable

Address: PO Box 578

City: Durant State OK Zip 74702

Phone: (580) 931-6644

Email: padair@durant.org

Copyright © 2015 Saltus Technologies, LLC All Rights Reserved

digiTICKET®
electronic ticketing solution

digiTICKET as a Service Change Order for:

Durant Police Department

Chief David Houser

August 30, 2016

SALTUS TECHNOLOGIES

Prepared by:
Cory Box
Sales Manager
918.392.3912

Saltus Technologies
907 South Detroit, Suite 820
Tulsa, OK 74120

digiTICKET™
electronic ticketing solution

August 30, 2016

Chief David Houser
Durant Police Department
RE: digiTICKET™ SERVICES AGREEMENT CHANGE ORDER 1

Chief Houser,

This letter outlines the change order that was discussed today regarding the addition of four (4) more handheld units. If you are okay with these changes – please have the document signed by the appropriate authority if not yourself, scan it, and email it back. We will amend your contract and invoicing accordingly.

Your current digiTICKET Services Agreement is for six (6) handheld units. This configuration prices each unit at $230 per month. The total monthly fee per the current agreement is $1,380 per month. Under the new agreement, your new monthly cost per unit will drop to $205.

Proposed Changes:

1. Add four licenses and hardware kits (increase from 6 to 10 units).

The increased configuration of ten (10) total units will increase the monthly total price to $2,050 per month. There are no out of pocket or one-time costs associated with this change. Your monthly rate increase will be effective on your first invoice as digiTICKET has not yet been deployed.

Signatures:

By signing and returning this document you are signifying the acceptance of the Change Order as described above. This agreement can only be modified when both parties agree in writing.

Agreed to:	Agreed to:
City of Durant Police Department	Saltus Technologies, LLC
By: _____	By: _____
Name: David Houser	Name: Eric C Fultz
Title: Chief of Police	Title: President & CEO
Date: _____	Date: 8/30/16

Copyright © 2016 Saltus Technologies, LLC All Rights Reserved

Agenda Item: 1.r.

The City of Durant

Durant Police Department

Memorandum

Date: 8/31/2016
To: Mayor and City Council
From: David Houser, Chief of Police
Re: Consider Approval of Request For Authorization To Purchase/Spend (RFAP #2016-169) for Electronic Citation Monthly Service Fees For Ten (10) Devices In The Amount Of $2,050 Per Month

---

Contract C-2015-72 for electronic citation services through Saltus Technologies was approved January 2016. Implementation has been achieved and the devices are active.

The monthly service fee for ten (10) devices is $2,050. The RFAP amount is for the remainder of this fiscal year which totals $20,500. This amount has been budgeted.

Council Information / Action Requested

Council / Recommend approval

City Staff Information / Action Follow-up, if Council authorizes this action:

Chief of Police / Obtain Proper Signatures, Submit for Purchase Order
AP / Receive and Pay Monthly Invoices

ATTACHMENTS:

Description	Type	Upload Date
C-2015-72 Original Contract	Cover Memo	8/31/2016
C-2015-72 Change Order	Cover Memo	8/31/2016
RFAP #2016-169	Exhibit	9/1/2016

C-2015-72

digiTICKET®
electronic ticketing solution

digiTICKET as a Service Agreement for the:

City of Durant, OK
Interim Chief David Houser

November 5, 2015

SALTUS TECHNOLOGIES

Prepared by:
Cory Box
Sales Manager
918.392.3912

Saltus Technologies
907 South Detroit, Suite 820
Tulsa, OK 74120

digiTICKET™
electronic ticketing solution

To date Saltus Technologies is the only national eCitation provider to continually offer their solution as a monthly service offering. Known as digiTICKET as a service or "dSaaS", the monthly service offers no upfront cost, no lengthy contract term, and includes the entire turnkey solution rolled into a low monthly fee per unit. Additional units can be added at any time with just a slight adjustment to the monthly invoice. More than half of our Oklahoma customers are using this option and many consider it a justification for sole sourcing our product and avoiding RFP's and competitive bid situations.

THIS DIGITICKET AS A SERVICE AGREEMENT ("Agreement") is entered into between Saltus Technologies, LLC ("Saltus"), and the City of Durant, Oklahoma ("Customer"). Subject to the terms and conditions set forth herein, the parties agree as follows:

1.0 digiTICKET AS A SERVICE PRICING

The digiTICKET Solution is a mobile software application that automates the process of writing and processing citations for law enforcement agencies using mobile software running on handheld computers, tablets or laptops. The digiTICKET as a Service includes hardware, digiTICKET software, implementation services provided by Saltus and hosting services. The price and fees for the digiTICKET as a Service shall be as follows:

"digiTICKET as a Service" Price Quote			
Item Description	Units	Per Unit	Total Per Month
Handheld Units	6	$ 230	$ 1,380
Laptop Units	0	$ 175	$ -
		Monthly Subtotal:	$ 1,380
		Total Monthly Fee:	$ 1,380
Server and Client Software License Fees			Included
InSynch & Incode data exports			Included
Ticket approval or "process" tab			Included
All Implementation and Training Services Fees			Included
All Required Hardware (devices, cables, docks, mounts, etc.)			Included
Customization of Printed Ticket			Included
Ticket Paper and other Consumables			Included
Web Application Hosting Fee			Included
Annual Software Maintenance and 24/7 Support Fee			Included
Convert software to a laptop based environment (optional & potential future cost)			$2,000

digiTICKET as a Service is not a lease, but a "pay for use" model. It includes the following benefits:

- Zero up front cost for use of hardware, software, and standard implementation and training services. After training and deployment, Saltus will invoice for the first month of service.
- Customer pays a per-unit, per-month fee. Annual or semi-annual prepayment discounts shall apply.
  - If the Customer requires optional capabilities there is an upfront fee for these services (see Pricing above).

Copyright © 2015 Saltus Technologies, LLC All Rights Reserved

digiTICKET™
electronic ticketing solution

- Saltus owns the software and all equipment.
  - Saltus will replace defective equipment at no additional cost.
  - Saltus will refresh old equipment as its useful life ends as jointly agreed upon by Saltus and the Customer.
  - The Customer is responsible for lost, damaged or stolen equipment. In the event of a loss, Saltus will provide the Customer with new equipment and invoice the Customer for the residual value of the equipment based on a useful lifespan of 48 months.
- No contract term obligation – If the Customer is dissatisfied at any point with Saltus or digiTICKET, Customer can terminate this Agreement with no penalty by providing sixty (60) day written notice to Saltus and return all equipment.
- Additional units can be added or subtracted by Customer at any time with a corresponding adjustment to the monthly bill at the then current rates and fees.
- Customer may convert this digiTICKET as a Service Agreement to a Purchase Agreement if requested in writing by the Customer. Upon acceptance by Saltus, a portion the payments received by Saltus under this Agreement will be applied to the purchase price of the digiTICKET Solution. Percentages of received payments vary depending on number of payments made under this Agreement. 25% of total payments received by Saltus under this Agreement will be applied to the purchase of the digiTICKET Solution if such purchase is made after 6 months and less than 12 months from the date of this Agreement. 50% of total payments received by Saltus under this Agreement will be applied to the purchase of the digiTICKET Solution if such purchase is made after 12 months and less than 24 months from the date of this Agreement. 75% of total payments received by Saltus under this Agreement will be applied to the purchase of the digiTICKET solution if such purchase is made after 24 months from the date of this Agreement.

Copyright © 2015 Saltus Technologies, LLC All Rights Reserved

digiTICKET™
electronic ticketing solution

2.0 SCOPE OF THE AGREEMENT

Saltus will provide Customer with the digiTICKET electronic ticketing solution as a monthly service offering. The service offering will provide the following:

1. digiTICKET Software
    a. A digiTICKET software license for the term of the Agreement, including:
    b. The software license includes
        i. a single web server license which includes access to the administrative website
        ii. mobile client software licenses for ~~five (5)~~ Six (6) handheld computers. DH 8/15 1/14/16
            1. Additional client licenses can be purchase as needed
    c. The software will be provided as-is, configured for the Customer. This means no new functionality will be developed specifically for the Customer, unless otherwise agreed upon and included within the pricing section of this Agreement. However, the software will be configured specifically for the Customer. Configuration of software includes items such as:
        i. Updating the list of violations and bond amounts
        ii. Updating required fields on the mobiles software
        iii. Updating web server user permissions
        iv. Creating one custom report
        v. Creating at least one electronic data file export for integration with Court or Records Management System(s).
2. Software maintenance provided through periodic release updates to the Customer and server software for the term of this Agreement.
3. All hardware and consumables required to utilize the digiTICKET solution, including:
    a. Rugged, handheld ticket writers
    b. Rugged, mobile Bluetooth printers
    c. All necessary charging cables, docks, mounts, screen protectors and carrying cases
    d. Thermal printer paper
4. Hardware support and maintenance will be provided by Saltus, including:
    a. Replacement devices, due to normal wear and tear issues and mechanical failure
    b. Replacement devices when the Customer and Saltus mutually agree that the useful life of the devices have passed
    c. The Customer must reimburse Saltus for lost, damaged or stolen devices. Reimbursement amounts to be determined by Saltus based on purchase price and age of the device.
5. Implementation and training services will be provided to configure and deploy the digiTICKET solution for the Customer:
    - **Requirements Definition:** Saltus will facilitate a workshop with subject matter experts from various Customer departments to ensure that the digiTICKET Solution is configured specifically the way the Customer has requested.
    - **System Configuration:** Once all requirements are documented, digiTICKET is then configured to meet such requirements. This includes the setup of all ordinances, user roles and permissions, printed ticket formatting, mobile client configuration, report development, interface creation and testing, etc.

Copyright © 2015 Saltus Technologies, LLC All Rights Reserved

digiTICKET™
electronic ticketing solution

- User Acceptance Testing: Once configured, Saltus will then facilitate a user acceptance testing session in a classroom setting with key Customer personnel. This session is conducted to ensure that the system is configured as requested by the Customer.
- Training: digiTICKET is extremely easy to use. Training of each end user typically takes no more than two hours. Saltus' preference is a "Train the Trainer" approach which would include training the trainers as well as providing end user training to the satisfaction of the Customer. Training shall include:
  - Complete classroom, hands-on training
  - Train the Trainer accommodations for on-going training
  - User manual, classroom materials and tip sheets for users
- Deployment: After training, the digiTICKET Solution is deployed and Saltus then provides end user support and system maintenance and updates for the term of this Agreement.
- Support: The Customer will appoint up to two individuals as Primary Points of Contact (PPCs) who will serve as an interface between Saltus and the Customer.

Optional Professional Services

As part of this Agreement, the Customer will receive future product release upgrades for the term of this Agreement. However, if the Customer requires unique enhancements, integration services to back office systems or custom reports, Saltus has an experienced professional services team that can provide assistance at an additional charge.

If not separately priced, Saltus currently provides these services at $125 per hour. In addition, the Customer would be responsible for any travel and living expenses, which are billed at actual cost and only as preapproved by the Customer.

Miscellaneous

It is understood and agreed by the parties that:

- The Customer and Saltus will each appoint Project Leads for this project. The Project Leads will serve as the Primary Point of Contact (PPC) for the respective parties.
- The Customer will appoint Administrators that will train and provide first level support to Customer users. These individuals can be the same individual as the PPC if so desired.
- The Customer Administrators will be the single point of contact between Saltus Support Services and the Customer.
- Changes to project scope can affect time estimates required for implementation and will be mutually agreed to and confirmed in writing.
- Saltus may perform User Acceptance Testing and Training activities remotely utilizing webinar and teleconferencing technologies.
- Saltus will not provide installation services for vehicle docks or mounts.
- The Customer will provide a full-time Internet connection to facilitate the synchronization of tickets from the ticket writing devices to the digiTICKET server.
- Fees charged by Court or RMS system vendors are not included as part of this Agreement, and must be negotiated separately between the Customer and each respective vendor.
- The monthly fees set forth in this Agreement include services for configuring digiTICKET to meet Customer's ticketing specifications on the mobile units and the server application.
- Saltus will host the digiTICKET application.

Copyright © 2015 Saltus Technologies, LLC All Rights Reserved

digiTICKET™
electronic ticketing solution

3.0 digiTICKET SOFTWARE LICENSE

This Software License covers the Saltus software that is the subject of this Agreement, which includes computer software and may include associated media, printed materials, "online" or electronic documentation, and Internet-based services ("Software"). Customer agrees to be bound by the terms of this Section 3.0 by installing, copying, or otherwise using the Software.

1. GRANT OF LICENSE. SALTUS grants Customer the following rights provided that Customer complies with all terms and conditions of this Section 3.0: a) SALTUS grants to Customer a nonexclusive license to use copies of the Software, provided that for each individual using the Software within Customer's organization, Customer has acquired a separate and valid license for each user device as may be required by SALTUS. b) Customer may make and use an unlimited number of copies of any documentation, provided that such copies shall be used only for Customer's purposes pursuant to this Agreement and are not to be republished or distributed (either in hard copy or electronic form) beyond Customer premises. c) Customer may also store or install a copy of the Software on a storage device, such as a network server, used only to install or run the Software on computers used by a licensed end user in accordance with a) above. d) Software provided by SALTUS may not be distributed to any individual, third party or entity that exists external to Customer's organization or for any purpose other than use of the Software for Customer. e) Subject to the terms and conditions as specified herein, under the rights obtained from MacroSolve, Inc., and in SALTUS'S license under United States Patent Number 7,822,816, SALTUS grants to Customer during the Term of this Agreement a non-exclusive, non-transferable, non-assignable sublicense to use the Software.

2. RESERVATION OF RIGHTS AND OWNERSHIP. SALTUS reserves all rights not expressly granted to Customer in this Agreement. The Software is protected by copyright and other intellectual property laws and treaties. SALTUS owns the title, copyright, and other intellectual property rights in the Software. SALTUS is the holder of a perpetual license with the right to grant sublicenses to United States Patent Number 7,822,816 from MacroSolve, Inc. for use with the Software. The Software is licensed, not sold.

3. LIMITATIONS ON DECOMPILATION, AND DISASSEMBLY. Customer may not reverse engineer, decompile, or disassemble any Software provided in compiled or object code form, except and only to the extent that such activity is expressly permitted by applicable law notwithstanding this limitation.

4. NO RENTAL/COMMERCIAL HOSTING. Customer may not rent, lease, lend or provide commercial hosting services with the Software.

5. CONSENT TO USE OF DATA. Customer agrees that SALTUS and its affiliates may collect and use technical information gathered as part of the product support services provided to Customer, if any, related to the Software. SALTUS may use this information solely to improve our products or to provide customized services or technologies to Customer and will not disclose this information in a form that personally identifies Customer.

6. ADDITIONAL SOFTWARE/SERVICES. This Software License applies to updates, supplements and add-on components of the Software that SALTUS may provide to Customer or make available to Customer after the date Customer obtains the initial copy of the Software, unless SALTUS provides other terms along with the update, supplement, add-on component.

7. NOT FOR RESALE SOFTWARE. Software provided by SALTUS may not be sold or otherwise transferred for value, or used for any purpose other than Customer's application of the Software pursuant to this Agreement.

8. EXPORT RESTRICTIONS. Customer acknowledges that the Software is subject to U.S. export jurisdiction and agrees to comply with all applicable international and national laws that apply to the Software, including the U.S. Export Administration Regulations, as well as end-user, end-use, and destination restrictions issued by U.S. and other governments.

9. SOFTWARE TRANSFER & ASSIGNMENT. All rights to use of Software provided by this Agreement are for the sole use of Customer and may not be transferred, assigned, directly or indirectly without prior written authorization from SALTUS.

Copyright © 2015 Saltus Technologies, LLC All Rights Reserved

digiTICKET electronic ticketing solution

10. TERMINATION. Without prejudice to any other rights, SALTUS may terminate the Software License if Customer fails to comply with the terms and conditions of this Agreement. In such event, Customer shall destroy all copies of the Software and all of its component parts.

4.0 Other Terms

1. DISCLAIMER OF WARRANTIES. TO THE MAXIMUM EXTENT PERMITTED BY APPLICABLE LAW, SALTUS DISCLAIMS ANY IMPLIED WARRANTIES, DUTIES OR CONDITIONS OF MERCHANTABILITY, AND OF FITNESS FOR A PARTICULAR PURPOSE.

2. EXCLUSION OF DAMAGES. TO THE MAXIMUM EXTENT PERMITTED BY APPLICABLE LAW, IN NO EVENT SHALL SALTUS BE LIABLE FOR ANY SPECIAL, INCIDENTAL, PUNITIVE, INDIRECT, OR CONSEQUENTIAL DAMAGES WHATSOEVER.

3. LIMITATION OF LIABILITY AND REMEDIES. NOTWITHSTANDING ANY DAMAGES THAT CUSTOMER MIGHT INCUR FOR ANY REASON WHATSOEVER (INCLUDING, WITHOUT LIMITATION, ALL DAMAGES REFERENCED HEREIN AND ALL DIRECT OR GENERAL DAMAGES IN CONTRACT OR ANYTHING ELSE), THE ENTIRE LIABILITY OF SALTUS AND ANY OF ITS SUPPLIERS UNDER ANY PROVISION OF THIS AGREEMENT AND CUSTOMER'S EXCLUSIVE REMEDY HEREUNDER SHALL BE LIMITED TO THE GREATER OF THE ACTUAL DAMAGES CUSTOMER INCURS IN REASONABLE RELIANCE ON THE SOFTWARE UP TO THE AMOUNT ACTUALLY PAID BY CUSTOMER FOR USE OF THE SOFTWARE. THE FOREGOING LIMITATIONS, EXCLUSIONS AND DISCLAIMERS SHALL APPLY TO THE MAXIMUM EXTENT PERMITTED BY APPLICABLE LAW, EVEN IF ANY REMEDY FAILS ITS ESSENTIAL PURPOSE. CUSTOMER AGREES THAT THE PRICE UNDER THIS AGREEMENT WOULD BE SUBSTANTIALLY HIGHER BUT FOR THESE LIMITATIONS.

4. APPLICABLE LAW. Any contracts or agreements between SALTUS and Customer resulting from and including this Agreement and any other accompanying documents shall be controlled and interpreted in accordance with the laws of the State of Oklahoma and should any conflict arise concerning any terms of such agreements or contracts which results in litigation, the forum for such litigation and the venue thereof shall lie in the District court in and for Tulsa City, State of Oklahoma.

5. ENTIRE AGREEMENT; SEVERABILITY. This Agreement (including any addendum or amendment to this Agreement) are the entire agreement between Customer and SALTUS and supersede all prior or contemporaneous oral or written communications, proposals and representations with respect to the Software or any other subject matter covered by this Agreement. To the extent the terms of any SALTUS policies or programs conflict with the terms of this Agreement, the terms of this Agreement shall control. If any provision of this Agreement is held to be void, invalid, unenforceable or illegal, the other provisions shall continue in full force and effect.

Copyright © 2015 Saltus Technologies, LLC All Rights Reserved

digiTICKET™
electronic ticketing solution

5.0 SIGNATURE

Pricing

digiTICKET as a Service pricing (as defined above) is $1,380 per month.

Discounts for pre-payments are offered as follows:

- 6 months in advance – 1.25 % discount
- 12 months in advance – 2.5 % discount

Total one time interface and custom report fees are $0. These fees will be invoiced upon successful testing and deployment to the live system.

The Customer can add or remove units as needed. If total number used increases or decreases to a different pricing level, the total monthly fee will be adjusted by Saltus as necessary.

All invoices are NET 30.

Term and Termination

The term of this Agreement is five (5) years. However, the Customer may terminate this Agreement for any reason with 60 days prior written notice to Saltus. Upon termination, the Customer must return all equipment and unused paper. Upon such termination, provided the Customer is not in default under this Agreement, Saltus will refund prepayments pro-rated to reflect the termination date.

Either party may terminate this Agreement upon a default of the other party under this Agreement, provided such default remains uncured for thirty (30) days from the date of written notice from the non-defaulting party to the other party specifying such default.

Saltus reserves the right to increase future monthly pricing (on an annual basis) to reflect changes in costs of service offerings, etc.

Signatures

By signing and returning this document you are signifying the acceptance of the Agreement and the terms and conditions as outlined above. This Agreement can only be modified when both parties agree in writing.

Agreed to:	Agreed to:
City of Durant	Saltus Technologies, LLC
By: [signature]	By: _____
Name: Stewart Hoffman	Name: _____
Title: Mayor	Title: _____
Date: 1-12-2016	Date: _____

CITY OF DURANT OFFICIAL SEAL STATE OF OKLAHOMA

Copyright © 2015 Saltus Technologies, LLC All Rights Reserved

digiTICKET™
electronic ticketing solution

6.0 CUSTOMER CONTACT FORM

Purchase Order Number: 1654424

Tax Exempt Certificate Number: FEI 736005186

Primary Contact:

Name: DAVID HOUSER or Mike Woodruff

Address: 3104 Carl Albert Drive

City: DURANT State OK Zip 74701

Phone: 580-924-3737

Email: dhouser@durant.org

Billing Contact: City of Durant

Name: Pam Adair - Accounts Payable

Address: PO Box 578

City: Durant State OK Zip 74702

Phone: (580) 931-6644

Email: padair@durant.org

Copyright © 2015 Saltus Technologies, LLC All Rights Reserved

digiTICKET®
electronic ticketing solution

digiTICKET as a Service Change Order for:

Durant Police Department

Chief David Houser

August 30, 2016

SALTUS TECHNOLOGIES

Prepared by:
Cory Box
Sales Manager
918.392.3912

Saltus Technologies
907 South Detroit, Suite 820
Tulsa, OK 74120

digiTICKET™
electronic ticketing solution

August 30, 2016

Chief David Houser
Durant Police Department
RE: digiTICKET™ SERVICES AGREEMENT CHANGE ORDER 1

Chief Houser,

This letter outlines the change order that was discussed today regarding the addition of four (4) more handheld units. If you are okay with these changes – please have the document signed by the appropriate authority if not yourself, scan it, and email it back. We will amend your contract and invoicing accordingly.

Your current digiTICKET Services Agreement is for six (6) handheld units. This configuration prices each unit at $230 per month. The total monthly fee per the current agreement is $1,380 per month. Under the new agreement, your new monthly cost per unit will drop to $205.

Proposed Changes:

1. Add four licenses and hardware kits (increase from 6 to 10 units).

The increased configuration of ten (10) total units will increase the monthly total price to $2,050 per month. There are no out of pocket or one-time costs associated with this change. Your monthly rate increase will be effective on your first invoice as digiTICKET has not yet been deployed.

Signatures:

By signing and returning this document you are signifying the acceptance of the Change Order as described above. This agreement can only be modified when both parties agree in writing.

Agreed to:	Agreed to:
City of Durant Police Department	Saltus Technologies, LLC
By: _____	By: _____
Name: David Houser	Name: Eric C Fultz
Title: Chief of Police	Title: President & CEO
Date: _____	Date: 8/30/16

Copyright © 2016 Saltus Technologies, LLC All Rights Reserved

R02122015

SPEND/CNTRCT#
INCODE PROJ#
RFAP# 2016-169

REQUEST FOR AUTHORIZATION TO PURCHASE

Ref: 11 O.S. §10:114 (B) and 61 O.S. §103 (D) and & City of Durant Code: § 37.003-37.010

Item #

1 Item planned for spending (provide details):
Electronic Citation Monthly Service Fee

2 Department requesting authorization:
Police

3 Bidding recommendation (award or reject along with name and contact information of vendor):
Contract # C-2015-72 Saltus Technologies

4 Estimated Purchase Date (M/D/Y): September 1, 2016

5 What are the financing or lease purchase terms (APR %, length of financing, payments, etc.)

6 Is this item included in the current FY budget (Yes/No) Yes

7 GL account code: 001-013-512.30-79

8 Spending / purchase request details (complete below blanks):

8a Amount requested to spend $20,500.00

8b Item (new or replacement, if a capital item complete fixed asset form)? New

8c Old Item to be Traded-In (Yes / No). Note: if a capital item complete fixed asset form?

If a Replacement Item, give description, age and condition of item to be replaced (including model & serial or VIN, trade allowance)

8d Is a contractor written agreement involved (Yes / No), if yes include a copy of the contract after City Attorney Review Yes

8e Does the purchase involve Grant Funding (Yes or No) No

8f What is the City Cash Match for the Grant $

8g What other match or financial obligation is involved with the City accepting this Grant (explain with details)

9 Purchase is Planned By (complete appropriate item(s) below):

9a **Informal Quotes** – Purchases of $2000-$15,000 City Manager approval required. Purchases with an estimated cost over $15,000 use formal bids. Specifications & at least 3 quotes must be attached for items over $5,000 (city manager can require quotes for below $5,000):

9b **Formal Bids** – Purchases with an estimated cost over $15,000 Council approval required. Attach complete specifications and a bidders list with at least 3 bidders. Include bidder name, address, phone number, fax number and email address of recommended vendor:

9c **State Contract** – Purchases of $2,000-$15,000 City Manager approval required. Purchases over $15,000 Council approval required. Include name, address, phone number, fax number, email address of state contract vendor and state contract number:

9d **Buy Board** – Purchases of $2,000-$15,000 City Manager approval required. Purchases more than $15,000 Council approval required. Include name, address, phone number, fax number, email address of Buy Board:

9e **Professional Services Agreement** – Purchases over $2,000 and less than $15,000 via an engineering, surveying, architect, computer services, janitorial, etc. firm covered by a council approved professional services agreement, City Manager approval required.

C-2015-72

9f **Emergency Purchase** – To be utilized only when immediate action must be taken to protect the public health or safety or to prevent damage to property, prior council approval not required. Notify the City Manager immediately that an emergency purchase is needed.

9g **Sole Source Purchase** – Purchases of $2,000-$15,000 City Manager approval required. Purchases with an estimated cost over $15,000 Council approval required in addition to City Manager approval. Attach to this request a memo detailing the nature of the Sole source designation, that is explain how this purchase fulfills the requirements to be considered a sole source purchase:

10 Signature & date blocks (complete appropriate sections):

10a Signature of Grants Administrator (if applicable) — date (M/D/Y):

10b Signature Department Head — date (M/D/Y): 8/1/16

10c Signature of Division Head — date (M/D/Y):

(MH) — 9-01-2016

10d Signature of Budget Administrator — date (M/D/Y):

9/1/16

10e Signature of Finance Manager — date (M/D/Y):

9-1-16

10f Signature of City Manager (only over $2,000) — date (M/D/Y):

9-01-2016

10g Signature of City Treasurer (date) — date (M/D/Y):

11h City Manager Comments:

Agenda Item: 1.s.

The City of Durant

Durant Police Department

Memorandum

Date:	9/1/2016
To:	Mayor and City Council
From:	David Houser, Chief of Police
Re:	Consider Acceptance of Oklahoma Highway Safety Office Traffic Safety Grant

---

The Oklahoma Highway Safety Office has accepted our grant proposal for a general traffic safety program designed to decrease injury and injury related crashes across Oklahoma. The Durant Police Department has received this grant for the past fourteen years. The grant is for overtime enforcement and out of state travel and is a reimbursement grant.

Council Information / Action Requested

Council / Recommend Acceptance

City Staff Information / Action Follow-up, if Council authorizes this action:

Mayor / Online Signature
Police / Implement Grant Project

Agenda Item: 1.t.

The City of Durant

Office of City Clerk

Memorandum

Date:	9/5/2016
To:	Mayor and City Council
From:	Cynthia J. Price, City Clerk
Re:	Consider Recommendation of Durant Independent School District for Robert Bokies to Fill Vacated Seat on Durant Community Facilities Authority Board and Take Possible Action

---

This seat was vacated by Wes Schreier when he left employment with the Durant independent School District in May 2016. Mr. Schreier's resignation was accepted by the Durant City Facilities Authority at their regular meeting on September 8, 2016. This seat carries a three year term which expires in June 2018.

Council Information / Action Requested

Confirm or deny recommendation of Durant Independent School District for Robert Bokies to fill vacated seat on Durant Community Facilities Authority Board.

City Staff Information / Action Follow-up, if Council authorizes this action:

ATTACHMENTS:

Description	Type	Upload Date
Letter of Resignation of Wes Schreier	Exhibit	9/6/2016
Recommendation Letter from D.I.S.D.	Exhibit	9/6/2016

Durant.org
Powered by Google

AGENDA ITEM 1

Cynthia Price <cprice@durant.org>

Seat resignation

Wesley Schreier <schreierw@colbert.k12.ok.us> Thu, Sep 1, 2016 at 2:39 PM
To: cprice@durant.org

I need to inform you that I have taken a position with Colbert Schools and am no longer employed with Durant Public Schools. I therefore must resign my seat on the DCFA. My last day with the Durant School District was on May 27, 2016. I have greatly enjoyed my time with the DCFA and I wish you all the best.

Thank you
Wesley Schreier

I am sorry that this came so late, but I would have sworn that I had already sent it in to you.

DURANT INDEPENDENT SCHOOL DISTRICT

1323 Waco Street
Durant, Oklahoma 74701-2633

Phone: (580) 924-1276
Fax: (580) 924-6019

August 29, 2016

The City of Durant
Durant City Council
% Office of the City Manager
PO Box 578
Durant, OK 74702

To Whom It May Concern:

Mr. Wesley Schreier, a former Durant ISD Teacher/Coach, recently resigned his position on the Durant Community Facilities Authority (DCFA); therefore, the Durant ISD has been asked to submit the name of an individual for consideration by the Durant City Council to complete Mr. Schreier's term, which expires June, 2016.

The School Board of the Durant Independent School District (DISD), at their regularly scheduled meeting on July 11, 2016, voted to recommend **Mr. Robert Bokies** for consideration of appointment to the DCFA as a representative of the DISD. Mr. Bokies, Athletics' Teacher at Durant Middle School and a resident of the City of Durant, will provide the needed leadership on this committee.

Sincerely,

Duane Merideth
Superintendent
Durant Independent School District

Agenda Item: 1.u.

The City of Durant

Durant Fire Department

Memorandum

Date:	9/6/2016
To:	Mayor and City Council
From:	Roger Joines Fire Chief
Re:	Consider Acceptance of Donation from Discount Liquor in the Amount of $500.00 to Fire Department

---

Terry and Rhonda Pierce wanted to make this donation in appreciation for our service to the community.

Council Information / Action Requested

Consider Accepting $500.00 Donation to the Fire Department from Discount Liquor in Durant.

City Staff Information / Action Follow-up, if Council authorizes this action:

Treasurer's office will increase Fire Department budget by $500.00

Agenda Item: 1.v.

The City of Durant

Grants Department

Memorandum

Date:	9/6/2016
To:	Mayor and City Council
From:	Rebecca Collins, Grants Coordinator
Re:	Consideration To Void Contract C-2015-43 With Southern Oklahoma Development Association (SODA) For Grant Administration Services Relating To The Awarded US Department Of Economic Development (EDA) Grant # 08-01-05038 Project For The US Hwy 69 Bypass On / Off Ramps Serving The Commercial Metals Company Facility.

The US Department of Economic Development (EDA) grant **08-01-05038**, for the US Hwy 69 Bypass on / off ramps to serve the Commercial Metals Company facility, was awarded in September 2015, with council acceptance November 10, 2015. The EDA program normally prefers for a local Council of Government (COG) office to provide the grant administration.

Southern Oklahoma Development Association (SODA) - located in Durant, submitted the grant application and had been selected for this EDA project administration. The SODA admin contract (C-2015-43) for project administration was approved and executed August 11, 2015.

Because of the project scope, the OK Department of Transportation (ODOT) is the co-applicant and will administer the EDA grant through the ODOT office. SODA is aware of this administration change.

SEE ATTACHED CONTRACT C-2015-43

Council Information / Action Requested

Approval To Void Contract C-2015-43

City Staff Information / Action Follow-up, if Council authorizes this action:

Provide a copy of the approved minutes of this action to SODA.

ATTACHMENTS:

Description	Type	Upload Date
SODA Contract C-2015-43	Cover Memo	9/7/2016

CONTRACT FOR ADMINISTRATIVE SERVICES

This Agreement between City of Durant, located in Oklahoma, and Southern Oklahoma Development Association for the consideration hereinafter set forth, agree as follows:

This contract shall become effective concurrent with the U. S. Department of Commerce/Economic Development Administration's contract and shall be in effect through the end date of said contract. This contract period may be extended by mutual agreement of both parties.

I. PROJECT

Contractor understands that this contract is entered into to provide City of Durant with services constituting:

Administrative services required in implementing and carrying out the project, if said project receives funding by the U. S. Department of Commerce/Economic Development Administration. Required services are specified in Attachment "A".

Description of Project: CONSTRUCTION OF ON/OFF RAMP ON US HWY 70 AND OLD EAST MAIN STREET. DURANT, BRYAN COUNTY, OKLAHOMA

II. ADMINISTRATIVE RESPONSIBILITIES (SEE ATTACHMENT A)

Part II will be binding to both parties upon execution of this contract. City of Durant agrees to pay Contractor, as compensation for administrative consulting services, a total sum not to exceed $112,500.00. Contractor will be reimbursed in (4) four equal payments of $28,125.000. The first payment will be due upon release of funds, the second payment will be due once project is 50% complete, the third payment will be due once project is 75% complete and the remaining 25% will be due at closeout and will be paid only after receipt and approval of invoices from the contractor.

Services as specified in Attachment "A", Part II are subject to the following conditions.

A. The project specified in Part I is funded by the U. S. Department of Commerce/Economic Development Administration and for the amount of funding requested.

B. City of Durant shall have the option to accept the services of the Contractor beginning with the start date listed above of the Economic Development grant contract received from the U. S. Department of Commerce/Economic Development Administration or at a later date specified. Notification of acceptance of said services shall be in writing to Contractor. City of Durant agrees to pay the Contractor (SODA) as compensation for administrating EDA Grant in the amount of $112,500.00 dollars. Contractor will be reimbursed in (4) four equal payments of $28,125.000. The first payment will be due upon release of funds, the second payment will be due once project is 50% complete, the third payment will be due once project is 75% complete and the remaining 25% will be due at closeout and will be paid only after receipt and approval of invoices from the contractor.

The invoices must list the individual services that were provided, their percentage of completion, the fee requested (as defined in the Statement of Price submitted in Contractor 's Proposal), and identify each staff member where applicable who provided the services. Reimbursement for each service listed shall not exceed the completion percentage of the service provided (i.e. if 50% of a particular service is complete, no more than 50% of the fee for that service may be reimbursed).

C. Contractor shall not begin to provide any services as specified in Part II until written notification from City of Durant is received.

D. City of Durant shall have the option to not accept the services of the Contractor to be provided under Part II for any of the following reasons:

1. The project specified in Part I is funded by the U. S. Department of Commerce/Economic Development Administration at a lower amount than the amount requested.
2. City of Durant determines such services may be provided by City of Durant's staff.
3. City of Durant is dissatisfied with the services of the Contractor.

III. GENERAL TERMS AND CONDITIONS

A. SUBCONTRACT NOTIFICATION PROVISION

The work and services covered by this contract may be subcontracted by the Contractor. The Contractor will insure that in no event will the subcontract incur any obligation on the part of City of Durant

B. MODIFICATION

This contract is subject to such modification as may be required by federal or state law or regulations. The work and services to be performed and the total contract amount may be modified only upon written agreement of both parties.

INTERPRETATION, REMEDIES

1. In the event the parties fail to agree on charges or interpretations of this contract, both parties may jointly agree in writing to utilize an outside arbitrator to make a final determination binding upon both parties.
2. In the event of any disagreement between the Contractor and City of Durant relating to the work and services being performed and its conformity to the requirements of this contract, the decision of City of Durant shall prevail.
3. Neither forbearance nor payment by City of Durant shall be construed to constitute waiver of any remedies for any default or breach of the Contractor that exists then or occurs later.

C. SEVERABILITY CLAUSE

If any provision under this contract or its application to any person or circumstance is held invalid by any court of competent jurisdiction, such invalidity does not affect any other provision of this contract or its application that can be given effect without the invalid provision or application.

D. HOLD HARMLESS CLAUSE

Contractor shall, within limitations placed on such entities by State law, save harmless the Economic Development Administration, its agents, officers and employees and City of Durant, its agents, officers and employees from all claims and actions and all expenses defending same that are brought as a result of any injury or damage sustained by any person or property in consequence of any act or omission by the Contractor. Contractor shall, within limitations placed on such entities by state law, save harmless the Economic Development Administration, its agents, officers and employees and the Cities agents, officers and employees from any claim or amount recovered as a result of infringement of patent, trademark or copyright or from any claims or amounts arising or recovered under Workers' Compensation law or any other law. In any agreement with any subcontractor or any agent for the Contractor, Contractor will specify that such subcontractors or agents shall hold harmless the Economic Development Administration, its agents, officers and employees and City of Durant, its agents, officers and employees for all the herein-before-described expenses, claims actions or amounts recovered.

E. PERSONNEL

1. Contractor represents that he/she has or will secure, at his/her own expense, all personnel required to perform the services under this contract. Such personnel shall not be employees of nor have any contractual relationship with City of Durant

2. Contractor has full responsibility for payment of Workers' Compensation insurance, unemployment insurance, social security, state and federal income tax and any other deductions required by law for its employees.
3. All of the services required hereafter will be performed by Contractor or under his/her supervision and all personnel engaged in the work shall be fully qualified and shall be authorized or permitted under state and local law to perform such services.

F. TERMINATION OF CONTRACT FOR CAUSE

1. If, for any cause, the Contractor shall fail to fulfill in a timely and proper manner his/her obligations under this contract or if Contractor shall violate any of the covenants, agreements or stipulations of this contract, City of Durant shall thereupon have the right to terminate this contract by giving written notice to the Contractor of such termination and specifying the effective date thereof, at least 30 days before the effective date of such termination. In such event, the Contractor shall be entitled to receive just and equitable compensation for any work satisfactorily completed hereafter.
2. Notwithstanding the above, the Contractor shall not be relieved of any liability to City of Durant for damages sustained by City of Durant by virtue of any breach of the contract by the Contractor and the City shall withhold any payments to the Contractor until such time as the exact amount of damages due City of Durant from the Contractor is determined.

G. TERMINATION FOR CONVENIENCE OF CITY OF DURANT

City of Durant may terminate this contract at any time by giving at least 30 days notice in writing to the Contractor. If the City of Durant terminates the contract, as provided herein, the Contractor will be paid for the services rendered and any allowable expenses incurred up to the termination date.

H. CONFLICT OF INTEREST

No member of the governing body of City of Durant or any other officer, employee or agent of the City of Durant, who exercises any functions or responsibilities in connection with the Economic Development Administration (EDA) project and carrying out of the program shall have any personal financial interest, direct or indirect, in this agreement and the Contractor shall take appropriate steps to assure compliance.

I. INTEREST OF CONTRACTOR AND EMPLOYEES

Contractor covenants that he/she presently has no interest and shall not acquire any interest, direct or indirect, in the project area of any parcels therein or any other interest which would conflict in any manner or degree with the performance of his/her services herein. Contractor further covenants that in the performance of this agreement, no person having any such interest shall be employed.

J. REPORTS AND INFORMATION

1. Contractor, at such times and in such forms as City of Durant may require, shall furnish you with such periodic reports as it may request pertaining to the work or service undertaken pursuant to the contract, costs and obligations incurred or to be incurred in connection therein with any other matters covered by this contract.
2. Contractor shall furnish City of Durant with narrative reports and financial reports related to the elements of this contract in the forms and at such times as may be required by the county or federal and state grantor agencies.

K. COMPLIANCE WITH LOCAL LAWS

Contractor shall comply with all applicable laws, ordinances and codes of the state and local governments and Contractor shall save City of Durant harmless with respect to any damages arising from any tort done in performing any of the work under this contract.

L. COPYRIGHT

No reports, maps or other documents produced in whole or in part under this contract shall be the subject of an application for copyright by or on behalf of the Contractor.

M. RECORDS AND AUDITS

Contractor shall assist City of Durant in obtaining and organizing all books, documents, papers, records and other materials involving all activities and transactions related to this contract. Contractor shall also retain Contractor's own records relating to this contract for at least three (3) years from the date of submission of the final expenditure report by City of Durant or until all audit findings have been resolved, whichever is later. Contractor shall permit authorized representatives of the U. S. Department of Commerce, the federal or state Department of Labor and the U.S. Controller General to have full access to and the right to fully examine all such materials.

N. ANTI-KICKBACK REGULATIONS

Contractor shall comply with all applicable anti-kickback regulations covered under Department of Labor Regulation 29 CFR, Part III.

O. EQUAL EMPLOYMENT OPPORTUNITY

Contractor shall comply with the following equal opportunity requirements as part of the Community Development Block Grant (CDBG) assurance.

1. Civil Rights Act of 1964, Title VI: Contractor shall comply with Title VI of the Civil Rights Act of 1964, which provides that no person in the United States shall on the grounds of race, religion, color or national origin be excluded from participation in, be denied the benefits of or be otherwise subjected to discrimination under any program or activity for which the applicant received federal financial assistance.
2. Housing and Community Development Act of 1974, Section 109: Contractor shall comply with Section 109 of the Housing and Community Development Act of 1974, which provides that no person in the United States shall on the grounds of race, color, religion, national origin or sex be excluded from participation in, be denied the benefits of or be subjected to discrimination under any program or activity
3. Housing and Urban Development Act of 1968, Section 3: Contractor shall comply with Section 3, which provides that, to the greatest extent feasible, training and employment opportunities shall be made available to lower-income residents of the unit of local government or metropolitan area (or non-metropolitan City) in which the project is located and that contracts be awarded to small businesses located within or owned in substantial part by residents of the same metropolitan area (or non-metropolitan City) as the project.
4. Affirmative Action: Contractor shall take affirmative action steps to contract with small and minority-owned firms and women's business Enterprises as a part of the requirements of 24 CFR, Part 85.36 or 24 CFR, Part 570, Subpart J. Affirmative action steps include but are not limited to the following:
   a) Including qualified small, minority and women's business enterprises on solicitation lists.
   b) Assuring that small, minority and women's business enterprises are solicited whenever they are potential sources.
   c) When economically feasible, dividing total requirements into smaller tasks or quantities to permit maximum small, minority and women's business enterprises participation.
   d) Where the requirement permits, establishing deliver schedules, which will encourage participation by small, minority and women's business enterprises.
   e) Using the services and assistance of the Small Business Administration, the Office of Minority Business Enterprise of the U.S. Department of Commerce and the local minority business development center that assists with management and technical aspects and maintains a directory

of minority contractors, suppliers and vendors.

f) If any subcontracts are to be let requiring the prime contractor to take the affirmative action steps in a. through e. above.

P. AGE DISCRIMINATION ACT OF 1975

Contractor shall comply with the provisions of the Age Discrimination Act of 1975, which prohibits discrimination on the basis of age in the delivery of services and benefits supported by federal funds.

Q. REHABILITATION ACT OF 1973, Section 504

Contractor shall comply with the provisions of Section 504 of the Rehabilitation Act of 1973, which prohibits discrimination on the basis of disability in any programs or activities receiving federal financial assistance.

Executed by:

City of Durant

Stewart Hoffman, Mayor

Date: 8/11/15

Executed by:

Southern Oklahoma Development Association

Tommy Shepard, Executive Director

Date: 8-11-2015

ATTEST:

Cynthia J. Price

(SEAL)

CITY OF DURANT OFFICIAL SEAL STATE OF OKLAHOMA

ATTACHMENT A
ADMINISTRATIVE RESPONSIBILITIES

I. ADMINISTRATIVE TASKS

When a Contractor enters into a contract for administrative services, the administrator shall comply with all Federal and State laws and requirements. However, the Contractor is not relieved of its contractual obligation to ensure compliance. The following list identifies who shall be responsible to ensure the following tasks are completed in a timely manner:

		Contractor
A.	Public Hearings (as applicable)	X
B.	Environmental Review (as applicable)	X
C.	Release of Funds (as applicable)	X
D.	Requests for Payment (as applicable)	X
E.	Monthly Expenditure Reports (as applicable)	X
F.	Project Files (as applicable)	X
G.	Quarterly Progress Reports (as applicable)	X
H.	Land Acquisitions (as applicable)	X
I.	Bid Documents (as applicable)	X
J.	Notice of Award, Pre-Construction Conference, Notice to Proceed	X
K.	Weekly Payrolls (as applicable)	X
L.	On-Site Interviews (as applicable)	X
M.	On-Site Visits (as applicable)	X
N.	Closeout Documents (as applicable)	X
O.	Job Tracking (ED Projects) (as applicable)	X
P.	Maps (as applicable)	X
Q.	CIP Inventory (as applicable)	X
R.	CIP Needs Analysis (as applicable)	X
S.	Addressing of Structures as needed	X

II. DEFINITIONS: The following are definitions of the above-assigned tasks:

A. Public Hearing: All public hearings must be held in accordance with the Contractor's Citizen Participation Plan in order to comply with 24 CFR 570.486.

B. Environmental Review: Prepare environmental review record for all activities. Responsibilities include making a recommendation to the local governing body as to a finding of the level of impact, preparation of all required public notices, preparation for Request for Release of Funds and acquiring adequate documentation. For activities not exempt from environmental assessments, an environmental assessment will be prepared. For activities exempt and/or categorically excluded from environmental assessments, prepare a written Finding of Exemption, which should identify the project or activity and under which of the categories of exemption it falls. Also include documentation of compliance with requirements of historic preservation, flood plains and wetlands and other applicable authorities.

C. Release of Funds: Preparation of Environmental Review, leverage/commitment (if applicable, insurance bonding, Residential Anti-Displacement Plan, Placement Plan (ED projects), and Special Conditions (as required). These documents will be presented to the local governing board for approval and signature and submitted for processing.

D. Request for Payment: Request for funds must be submitted on the approved form and prepared in conformance with the instructions provided. Only request funds that can be expended within the allotted time (15 days from date funds received). The following information is needed to complete this form: Engineer pay estimates, approved invoices, Non-collusion affidavits and other such documents as required by the governing board. Although the administrator can complete this form, the Contractor must sign it.

E. Monthly Expenditure Report: The Contractor must report all funds received in a timely manner. A Monthly Expenditure Report must be completed and sent to ODOC by the 10th of the following month in which CDBG funds have been received. The administrator can complete this report, however, it must be signed by an authorized representative of the Contractor. Failure to submit this report will result in Requests for Payment being held until all funds received have been reported.

F. Project Files: All originals are to be maintained with the Contractor to demonstrate compliance with all applicable State, local and Federal regulations. Monitor project files throughout the program to ensure they are complete and that all necessary documentation is being retained.

G. Quarterly Program Reports: This report must be prepared and submitted to ODOC by the 10th day of July, October, January, and April.

H. Land Acquisition: If property was or is acquired with the express intent of using it for the activities for which CDBG funds are requested, that acquisition must have been and/or be conducted in con-formance with the requirements spelled out in Requirement 407 (HUD Handbook 1378, Chapter 5).

I. Bid documents. Detailed plans developed by engineer for construction contractors.

J. Notice of Award, Pre- Construction Conference and Notice to Proceed: Preparation of the Notice of Award with certification from the Contractor that he is not listed on the "Debarred List". Ensure a copy is submitted to ODOC. Conduct the Pre-Construction Conference, prepare a report in conjunction with Contractor, engineer, architect and subcontractor, to explain contract requirements.

K. Weekly Payrolls: Ensure weekly payrolls and statements of compliance are submitted and compared with Davis-Bacon Wage Rates.

L. On-Site-Interviews: Conduct on-site interviews of at least 10% of the Subcontractor's employees for each job classification. Interview must be conducted at least once during the course of construction.

M. On-Site Visits: Coordinate On-Site Visits.

N. Closeout Documents: Transmittal of CDBG Closeout documents, Final Expenditure Report (Final Expenditure Report ED), Contract Closeout Certifications and Beneficiary Report.

O. Job Tracking: Gather and complete Income Certification forms, Job Tracking Log and Quarterly Job Status Reports.

P. Provide Maps: Provide maps of water, sewer, electric, streets, storm drainage, roads, agency facilities (as applicable)

Q. CIP Inventory: Field work needed to inventory all streets, equipment, and assets of the County of Bryan.

R. CIP Needs Analysis: Capital Improvement Assessment to determine capital asset needs for a given period.

S. Addressing of Structures as needed: Sequential numbering of structures for NENA standards.

Agenda Item: 1.w.

The City of Durant

Durant/Bryan County Emergency Management

Memorandum

Date: 9/7/2016
To: Mayor and City Council
From: James Dalton, Director of Emergency Management Services
Re: Consider Adoption of the 2016-2017 Durant / Bryan County Emergency Operations Plan Update

---

Council Information / Action Requested

City Staff Information / Action Follow-up, if Council authorizes this action:

ATTACHMENTS:

Description	Type	Upload Date
Consider Adoption of the 2016-2017 Durant / Bryan County Emergency Operations Plan Update	Cover Memo	9/7/2016
Emergency Operations Plan Resolution 2016	Cover Memo	9/7/2016
Emergency Operations Plan (EOP) Master County Plan September 2016	Cover Memo	9/7/2016

THE CITY OF DURANT

Office of Emergency Management

Memorandum

Date: August 30, 2016

To: Mayor and City Council

From: James Dalton, Emergency Management Director

Re: Adoption by Resolution the 2016 -2017 Durant / Bryan County Emergency Operations Plan (EOP)

Council Information / Action Requested

- Request the Mayor and Council to Adopt by Resolution the 2016 - 2017 Durant / Bryan County Emergency Operations Plan.
- All actions should take no more than 5 minutes.

City Staff Information / Action Follow-up

- Emergency Management Staff has developed the 2016 - 2017 Durant / Bryan County Emergency Operations Plan (EOP).
- I, James Dalton, presented the 2016 - 2017 Durant / Bryan County Emergency Operations Plan (EOP) to the Bryan County Commissioners on September 12, 2016 @ 0900. The Durant / Bryan County, OK. Emergency Operations Plan (EOP) is for the period October 1, 2016 - September 30, 2017.
- I, James Dalton, am presenting the 2016 - 2017 Durant / Bryan County Emergency Operations Plan (EOP) to the Durant City Council on September 13, 2016 @ 1800 and request Adoption by Resolution. The Durant / Bryan County, OK. Emergency Operations Plan (EOP) is for the period October 1, 2016 - September 30, 2017.
- I, James Dalton, upon Adoption of the Emergency Operations Plan (EOP); will conduct a Stakeholders Meeting to review and discuss the 2016 - 2017 EOP.
- I, James Dalton, will provide the Stakeholders with an Electronic Copy of the 2016 - 2017 Durant / Bryan County Emergency Operations Plan (EOP).
- I, James Dalton, will provide additional documents on request, to authorized personnel, agencies, departments, and private sector partners aiding in disaster.

RESOLUTION NO. 2016 - 23

RE: City of Durant / Bryan County Emergency Operations Plan

WHEREAS, The City of Durant and Bryan County are located in an area subject to danger and damage from a wide range of natural and man-made hazards;

WHEREAS, the parties have strong and abiding interest in reducing losses for potential disasters, and strive to create a sustainable community that is resistant to the human and economic cost of disasters, and

WHEREAS, The City of Durant and Bryan County believe that pre-emptive planning for safety and loss-reduction is of significant value to the community and is in the interest of public safety and economic security, and

WHEREAS, The City of Durant and Bryan County have responsibility for disaster preparedness for all persons in the Durant community, and

WHEREAS, The City of Durant and Bryan County are interdependent for support, assistance, and training in mitigating potential hazards to the common geographical space occupied by the City of Durant and Bryan County, and

WHEREAS, The City of Durant and Bryan County recognize the need for ongoing Emergency Management planning by all jurisdictions of government in order to provide a framework in which the departments of the City of Durant, and Bryan County can plan and perform their respective emergency functions during a disaster or national emergency.

NOW, THEREFORE, BE IT RESOLVED by the Mayor and City Council of the City of Durant, Ok; that the City of Durant declares its desire and intent to partner with Bryan County in its Emergency Operations Plan and endorses the current proposed Emergency Operations Plan being submitted by Bryan County to the Oklahoma Department of Emergency Management (ODEM) for approval.

1. That the Bryan County Emergency Operations Plan, attached hereto and made part of Resolution, together with any and all graphic representations referenced in this Emergency Operations Plan, are hereby approved.

Witness our hands, this 13th day of September, 2016.

The City of Durant, Oklahoma
A Municipal Corporation

_____
Stewart Hoffman, Mayor

_____
Cynthia Price, City Clerk

TABLE OF CONTENTS

DURANT/BRYAN COUNTY EMERGENCY OPERATIONS PLAN

		PAGE
APPROVAL PAGE		1
DISTRIBUTION		3
RECORD OF CHANGES		5
CHANGE SUBMISSION FORM		7
BASIC PLAN		
I.	PURPOSE	BP1
II.	SITUATION AND ASSUMPTIONS	BP1
III.	CONCEPT OF OPERATIONS	BP1
IV.	TASK ORGANIZATIONS AND RESPONSIBILITIES	BP3
V.	DIRECTION AND CONTROL	BP9
VI.	CONTINUITY OF GOVERNMENT	BP10
VII.	ADMINISTRATION AND LOGISTICS	BP11
VIII.	PLAN DEVELOPMENT AND MAINTENANCE	BP13
IX.	AUTHORITIES AND REFERENCES	BP13
	Appendix 1 - Incorporation of National Response Plan	BP15
	Appendix 2 – Definitions	BP17
	Appendix 3 - List of Acronyms	BP19
ANNEXES AND APPENDICES.		
ANNEX A: DIRECTION AND CONTROL		A1
Appendix 1 - Emergency Services Organization		A7
Tab A - Organization of the EOC Coordination Group		A9
Tab B - Organization of the EOC Operations Staff		A11
Appendix 2 - Organization Assignment Roster		A13
Appendix 3 - EOC Activation Checklist		A17

TABLE OF CONTENTS

Appendix 4 - EOC Administration Section ____ A19
Tab A - Situation Report ____ A21
Tab B - EOC Daily Log of Events ____ A23
Tab C - EOC Staffing Roster ____ A25
Tab D - Security Log ____ A27
Tab E - Sample Disaster Declaration ____ A29

ANNEX B: COMMUNICATIONS ____ B1

Appendix 1 - Message Log ____ B4
Appendix 2 - Bryan County, Communications Plan ____ B5

ANNEX C: WARNING ____ C1

Appendix 1 - Bryan Co. Warning Organizational Chart ____ C9
Appendix 2 - Community Warning ____ C11
Appendix 3 - Siren Decision SOP ____ C13
Appendix 4 - Siren Locations Within Bryan County ____ C15
Tab A - Siren Location(s) Map of Durant ____ C17
Tab B - Siren Location(s) Map of Bokchito ____ C19
Tab C - Siren Location(s) Map of Caddo ____ C21
Tab D - Siren Location(s) Map of Calera ____ C23
Tab E - Siren Location(s) Map of Achille ____ C25
Tab F – Siren Location(s) Map of Colbert ____ C27

ANNEX D: EMERGENCY PUBLIC INFORMATION ____ D1

Appendix 1 - News Media Organizations ____ D5
Appendix 2 - Media Access ____ D6

ANNEX E: EVACUATION ____ E1

ANNEX F: HUMAN RESOURCES ____ F1

Appendix 1 - Tornado/Severe Weather Shelters ____ F7
Tab A - Bryan County Shelters ____ F9
Appendix 2 - Oklahoma Volunteer Disaster Response Organizations Communication Chain (VOAD) ____ F11

ANNEX H: HEALTH AND MEDICAL ____ H1

Appendix 1 - Hospitals/Long-Term Care Facilities /Nursing Homes ____ H9

TABLE OF CONTENTS

Appendix 2 - Sources of Health and Medical Assistance _____ H11

ANNEX I: LAW ENFORCEMENT _____ I1

Appendix 1 - Temporary Pass _____ I5
Tab A - Sample Disaster Area Passes _____ I7
Appendix 2 - Law Enforcement Resources _____ I9

ANNEX J: PUBLIC WORKS _____ J1

ANNEX K: FIRE AND RESCUE _____ K1

Appendix 1 - City Fire/Rescue Resources in Bryan County _____ K3

ANNEX L: VETERINARY SERVICES/ANIMAL CARE _____ L1

Appendix 1 – Foreign Animal Disease (FAD) _____ L5

ANNEX N: RESOURCE MANAGEMENT _____ N1

Appendix l - Map; Equipment Yard and Staging Area Locations _____ N5
Appendix 2 - Potential Staging Areas _____ N7
Appendix 3 - Listing of Portable Restroom/Toilet Resources _____ N9

ANNEX P: DAMAGE ASSESSMENT _____ P1

Appendix 1 - Damage Assessment for Recovery Operations _____ P5

ANNEX Q: HAZARDOUS MATERIALS _____ Q1

Appendix 1 - Hazardous Materials Release Notification _____ Q7
Appendix 2 - Federal/State Telephone List _____ Q9
Appendix 3 - HAZMAT Operations - Typical Layout _____ Q11
Appendix 4 - General Characteristics and Examples of Hazardous Materials _____ Q13
Appendix 5 - Transportation Routes of Hazardous _____ Q15
Appendix 6 - Printout of Facilities Filing Tier I or Tier II Reports and Reported as Subject to Planning Under EPCRA _____ Q17

TABLE OF CONTENTS

ANNEX R: TERRORISM PREPAREDNESS _____ R1
Appendix 1 - Bomb Threat Checklist _____ R9
Appendix 2 – Critical Facilities/Assets _____ R11
Appendix 3 - School Emergency Standard Operating Instructions _____ R13

ANNEX S: MUTUAL AID AGREEMENTS _____ S1

ANNEX T: AIRPORT EMERGENCY PLAN _____ T1

ANNEX U: INCOMING MAIL SECURITY PLAN _____ U1

APPROVAL PAGE

BRYAN COUNTY
EMERGENCY OPERATIONS PLAN

To all Recipients: Effective Date: September 1, 2016

Transmitted herewith is the new integrated Emergency Operations Plan for Bryan County and the cities/towns therein. This plan supersedes any previous emergency management/civil defense plans promulgated by the county for this purpose. It provides a frame-work in which the departments of each city, town, and the county can plan and perform their respective emergency functions during a disaster or national emergency. This plan recognizes the need for ongoing Emergency Management Planning by all jurisdictions of government within Bryan County.

This plan attempts to be all inclusive in combining the four phases of Emergency Management, which are (1) Mitigation: Those activities which eliminate or reduce the probability of disaster; (2) Preparedness: Those activities which government, organizations, and individuals develop to save lives and minimize damage; (3) Response: To prevent loss of lives and property and provide emergency assistance; and (4) Recovery: Short-term and long-term activities which return the community to normal or with improved standards.

In accordance with the Homeland Security Presidential Directive (HSPD) 5, all agencies, departments and organizations having responsibilities delineated in this EOP will use the National Incident Management System (NIMS). This system will allow proper coordination between local, state and federal organizations.

The Incident Command System (ICS), as a part of NIMS, will enable effective and efficient incident management by integrating a combination of facilities, equipment, personnel, procedures, and communications operating with a common organizational structure. All on-scene management of incidents will be conducted using the Incident Command System.

This plan is in accordance with existing Federal, State and local statutes. It has been approved by the Bryan County Board of County Commissioners and the Oklahoma Department of Emergency Management. It will be revised and updated as required. All recipients are requested to advise the Bryan County Emergency Management Director of any changes which might result in its improvement or increase its usefulness.

APPROVED BY:

RON BOYER Co. Commissioner, District 1	TONY SIMMONS Co. Commissioner, District 2
JAY PERRY- Chairman Co. Commissioner, District 3	JAMES DALTON Emergency Management Director Bryan County

Durward Cook
State EM Area Coordinator

BLANK PAGE

DISTRIBUTION

BRYAN COUNTY

Copies of this Emergency Operations Plan will be distributed as follows:

TO:	**NO. OF COPIES**
Offices of the County Commissioners	4
Bryan County Emergency Management Director	1
Director, Oklahoma Department of Emergency Management	1
Office of the County Sheriff	1
Chairman, Bryan County L.E.P.C.	1
Office of the DHS County Director	1
Director, ACOG, ATTN: Rural Fire Coordinator	1
Commander, OHP Troop E, Durant, OK	1
Bryan County Supervisor, Division IV, ODOT	1
Bryan County Environmentalist, DEQ	1
Chairman, Bryan County Chapter of the ARC	1
Bryan County American Red Cross	1
Bryan County, Department of Health	1
Administrator, AllianceHealth Durant	1
District Conservationist – Assisting Bryan County Soil Conservation District	1
SOSU, Public Safety Department	1
Each municipal EM Director in the County.	2
Durant / Bryan Co. Communication Center	2
Durant Police Department	1
Durant Public Works Office	1

DISTRIBUTION

Each Mayor/City Manager/Fire Chief for an Incorporated Jurisdiction: Achille, Armstrong, Bennington, Bokchito, Caddo, Calera, Colbert, Durant (3), Hendrix, Kemp, Kenefic, Mead, Silo.	15
TOTAL	40

BLANK PAGE

RECORD OF CHANGES

DATE	SUBJECT AREA	CHANGE #	INITIALS

BLANK PAGE

CHANGE SUBMISSION FORM

TO: Mr. James Dalton
Bryan County Emergency Management Director
PO Box 578
Durant, Oklahoma 74702

Recommended changes, Corrections, Additions, and Deletions to the Emergency Operations Plan

Any user of this plan is encouraged to recommend changes to this plan that the user feels might enhance or clarify a particular portion of the area being addressed. Suggested changes should be submitted to the County/City Emergency Management Director, at the above address, for coordination, comment, concurrence, and approval. The format of suggested changes should be by Basic Plan or Annex, Section, Paragraph/Subparagraph and page number.

CHANGE:

SHOULD READ:

Submitted by: (Name)

(Date) (Ph. No.)

BLANK PAGE

PURPOSE.

A. This plan has been developed to provide a comprehensive, all-hazard emergency management program for Bryan County. It seeks to mitigate the effects of hazards, prepare for measures to be taken which will preserve life and minimize damage, enhance response during emergencies and provide necessary assistance, and establish a recovery system in order to return the county and the cities/towns to their normal state of affairs.

B. This plan attempts to define who does what, when, where, and how, in order to mitigate, prepare for, respond to, and recover from the effects of natural disasters, technological accidents, nuclear incidents and other major incidents/hazards.

II. I. SITUATION AND ASSUMPTIONS.

A. Situation.

1. Bryan County is located approximately 150 miles Southeast of Oklahoma City. The 2010 census of population for Bryan County is 42,416. The largest city and county seat, Durant, has a 2010 census of population 15,856. Durant is located on US Highway 69/75, approximately 60 miles east of the US Interstate 35 .Map mileage is148 from Durant to Oklahoma City.

2. The county is exposed to many hazards, all of which have the potential for disrupting the community, causing damage, and creating casualties. Potential hazards which may occur in or around the county are, floods, tornadoes, winter storms, civil disorder, earthquakes, dam failure, HAZMAT incident-fixed facility, HAZMAT incident-highway, nuclear incidents, power failure, radiological incident-transportation, subsidence, rural or urban fires and acts of terrorism.

B. Assumptions.

1. Bryan County and its cities and towns will continue to be exposed to the hazards identified above as well as others which may develop in the future.

2. Government officials will continue to recognize their responsibilities with regard to the public safety and exercise their authority to implement this emergency operations plan in a timely manner when confronted with real or threatened disasters.

3. If properly implemented, this plan will reduce or prevent disaster related losses.

III. CONCEPT OF OPERATIONS.

A. General.

1. It is the responsibility of government to undertake comprehensive

management of emergencies in order to protect life and property from the effects of hazardous events. This plan is based upon the concept that the emergency functions performed by various groups responding to an emergency, will generally parallel their normal day-to-day functions. To the extent possible, the same personnel and material resources will be employed in both cases.

2. Within Bryan County, the County Policy Group will contact Local Incorporated City/Town Policy Groups and request response resources, which are not available within county government, in order to manage events that occur in the unincorporated portions of the county. Local government, because of its proximity to these events, has the primary responsibility for emergency management activities. Other levels of government provide resources not available at the local level. When the emergency exceeds local government's capability to respond, assistance from the state government will be requested through the State of Oklahoma Emergency Operations Center (EOC). The federal government will provide assistance and resources to the state where needed. Federal assistance usually is extended to aid in recovery from major disasters.

3. Day-to-day functions which do not contribute directly to response actions to an emergency may be suspended for the duration of the emergency. The resources and efforts that would normally be required for those functions may be diverted to the accomplishment of emergency tasks by the agency managing the use of those resources.

4. A comprehensive emergency management plan is concerned with all types of hazards which may develop in the community. As shown below, it is more than an operations plan because it accounts for activities before, during, and after the disaster.

B. Phases of Management.

1. Mitigation.

Mitigation activities are those which eliminate or reduce the probability of a disaster occurring. It also includes those long-term actions which lessen the undesirable effects of unavoidable hazards.

2. Preparedness.

Preparedness actions serve to develop the response capabilities needed in the event an emergency should arise. Planning, training and exercises are among the activities conducted under this phase.

3. Response.

Response is the actual providing of emergency services during a crisis. These actions help to reduce casualties and damage, and speed recovery. Response activities include warning, evacuation, rescue, and similar operations.

4. Recovery.

Recovery is both a short-term and long-term process. Short-term operations seek to restore vital services to the community and to provide the basic needs of the public. Long-term recovery focuses on restoring the community to its normal, or improved, state of affairs. Examples of recovery actions include restoration of non-vital government services and reconstruction in damaged areas. The recovery period offers an opportune time to institute mitigation measures, particularly those related to the recent disaster.

IV. TASK ORGANIZATION AND RESPONSIBILITIES.

A. General.

Most of the departments within county government have emergency functions in addition to their normal duties. Consequently, each department is responsible for developing and maintaining its own emergency standing operating procedures to fulfill these responsibilities. Specific responsibilities are outlined under "Task Assignments" and amplified in function specific annexes in this plan.

B. Organization.

1. See Appendix 1, Annex A for Emergency Services Organization.

2. The Bryan County and each city Policy Group is composed of the following:

a. Bryan County: The Board of County Commissioners.

b. Each City: Mayor and Council members or Trustees.

3. The Emergency Services **Coordination Group** is composed of the following positions as assigned to the officials (coordinators) listed below: (See Appendix 2 to Annex A for names of the officials.)

a. **Chief of Operations:** Emergency Management Director appointed by the Policy Group.

b. **EOC Staff Coordinator:** Selected by the Emergency Management Director.

c. **Law Enforcement Service:** County Sheriff / Police Chief

d. **Fire/Rescue Service:** Fire Chief.

e. **Health/Medical Service:** County Health & Medical Coordinator.

f. **Shelter/Mass Care Service:** County American Red Cross Chapter Executive.

g. **Resources Management Service:** County Emergency Management Director.

h. **County Maintenance/Public Works/Engineering Services:** County Maintenance Foreman, and City Public Works Director (as required)

i. **Independent School District Services** (as required)**:** Superintendent(s) of Schools.

j. **Public Utility Services** (as required)**:** Managers of companies that provide natural gas, electricity and telephone services within the county.

k. **Manpower Services** (as required)**:** To be appointed by the County Emergency Management Director.

4. The **Operations Staff** is composed of the following sections.
(See Appendix 2 to Annex A for names of the assigned officials.)

a. **Communications/Message Center Section.**

b. **Damage Assessment Section.**

c. **Public Information Section.**

d. **Warning Section.**

e. **Shelter/Evacuation Section.**

f. **Administration Section.**

g. **Transportation Section.**

Note: In the event one or more of the above listed officials is incapacitated or otherwise unable to function, their assistant/deputy will replace them. See Paragraph V,C,4 of this annex.

5. Emergency Service Coordinators.

Emergency service coordinators are directors of departments within the county/city governments and volunteers with functional expertise required to adequately respond to most emergencies. They are responsible for the operation of their

departments and/or coordinating their actions with other departments and volunteer agencies to efficiently apply all available resources to the emergency confronting the city/town.

6. EOC Support and Special Staff.

EOC support and special staff members are volunteers who have skills and training in areas needed to provide a total response to an emergency. They may assist the emergency service coordinators in the accomplishment of their duties, perform functions within the EOC to enhance efficiency, or perform critical tasks outside of the scope of government departments.

C. Task Assignments and Responsibilities.

1. Emergency Management Director is responsible for:

a. Coordination of all phases of emergency management.

b. EOC communication capability.

c. Public information and education.

d. EOC operation.

e. Comprehensive emergency management planning.

f. EOC staff training.

g. Warning system planning.

h. Damage assessment planning.

2. County Sheriff/Law Enforcement is responsible for:

a. Maintaining law and order.

b. Traffic control.

c. Access control of restricted areas.

d. Security of vital facilities.

e. Operation of the warning system.

f. Communication system support.

g. Liaison with other law enforcement agencies.

h. Search and rescue operation support.

3. Fire Department is responsible for:

a. Fire suppression.

b. Fire prevention and education.

c. Supporting the operation of the warning system.

d. Search and rescue operations.

e. Hazardous materials decontamination.

f. Hazardous materials operations.

g. Assisting in damage assessment.

h. Communication system support.

4. County Maintenance Department is responsible for:

a. Debris clearance.

b. Providing engineering advice.

c. Maintaining roads and bridges.

d. Assisting with damage assessment of public property.

e. Assisting in decontamination operations.

5. The Superintendents of Schools for the disaster location are responsible for:

a. Providing public shelters.

b. Providing buses for transportation during disaster relief operations.

6. County Medical Examiner's Office, when committed, is responsible for:

a. Collecting, identifying and coordinating interment of deceased victims caused by disaster.

b. Coordinating funeral home support of disaster operations.

7. County Health Department, when committed, is responsible for:

a. Investigating sanitation conditions and establishing safe standards for crisis relocation, emergency shelter or disaster relief operations.

b. Coordinating medical support and epidemic control.

c. Inspecting food and water supplies.

d. Providing public health education.

8. DHS County Office, when committed, is responsible for:

a. Providing provisions/funds for emergency aid.

b. Coordination with the Red Cross and other related agencies.

9. National Guard, when committed, is responsible for assisting in:

a. Radiological protection.

b. Law enforcement and traffic control.

c. Search and rescue operations.

d. Providing military engineer support and assistance in debris clearance.

e. Providing logistical support with supply, transportation, maintenance, and food service support.

f. Providing communication support.

10. State and Federal Support is responsible for:

a. Public welfare assistance.

b. Resources.

c. Law enforcement.

d. Health and medical.

e. Debris clearance.

f. Public information and education.

11. American Red Cross, when committed, is responsible for:

a. Providing reception, care, food, lodging and welfare assistance throughout Bryan County.

b. Coordinating all personnel relief activities for any type disaster.

c. Operating shelters for disaster relief.

d. Providing damage assessment of private property.

e. Providing First Aid Support and blood supply to disaster relief medical operations.

f. Providing counseling service.

12. The Salvation Army is responsible for:

a. Supporting shelter/congregate care operations.

b. Providing mobile and fixed feeding sites.

c. Providing case management services and direct aid for disaster victims.

d. Providing spiritual counseling service.

13. Ministerial Alliance/Church Volunteer Groups are responsible for:

a. Assisting with lodging, feeding and welfare operations in support of disaster relief or relocation.

b. Assisting with reconstruction efforts.

c. Providing volunteer manpower.

d. Providing counseling service.

14. Medical Service Providers are responsible for:

a. Emergency medical care for disaster victims.

b. Health care.

c. Crisis counseling.

15. The County Clerk has responsibilities for county administrative duties.

16. The County Treasurer has responsibilities for fiscal duties.

17. The District Attorney is assigned all responsibilities of legal and emergency information services and will act on an advisory committee.

18. The County Excise Board and the Bryan County Associate District Judge will act with the District Attorney on the Advisory Committee to the Board of County Commissioners.

19. All other County Agencies, officers and employees of the county government will support and implement this plan as directed by the County Commissioners.

V. DIRECTION AND CONTROL.

A. The **final responsibility** for all emergency management **belongs to** the elected officials of the County who are members of the **Emergency Management Policy Group**. This group is the decision making group for all policy level decisions and is the executive head of the emergency service coordinators and EOC staff. During response operations, the members of the policy group will act in concert and advise/direct the activities of the entire response organization through the EOC emergency service coordinators. They will also be available to constituents to address non-routine matters.

B. The County **Emergency Management Director** is responsible for coordinating the emergency management program. He/she makes routine decisions and advises the Policy Group on alternatives when major decisions are required of that body. During emergency operations, he/she is responsible for the proper functioning of the EOC and its staff. The director also acts as liaison with other local, county, state and federal emergency management agencies.

C. Specific persons in departments/agencies are responsible for fulfilling their responsibilities as stated in this Basic Plan and the annexes thereto. **Department Supervisors** will retain control of their employees and equipment during response operations. Standing operating procedures are required of each department having responsibilities in this plan. These SOPs must include:

1. Recall of personnel during non-duty hours.

2. Prioritization of tasks to guide recovery work.

3. Procedures to be followed which deviate from normal.

4. Specific emergency authorities that may be assumed by the designated successor during emergency situations. (See Note at IV,B,4.)

D. During some periods of an emergency, **Department Supervisors** will be required to remain in the EOC and direct their departments from that facility. During any large scale emergency, the EOC will in fact become the seat of county/city government for the duration of the crisis.

E. In accordance with the Homeland Security Presidential Directive (HSPD) 5, all agencies, departments and organizations having responsibilities delineated in this EOP will use the **National Incident Management System (NIMS)**. This system will allow proper coordination between local, state and federal organizations.

F. The **Incident Command System (ICS)**, as a part of NIMS, will enable effective and efficient incident management by integrating a combination of facilities, equipment, personnel, procedures, and communications operating with a common organizational structure. All on-scene management of incidents will be conducted using the Incident Command System.

VI. CONTINUITY OF GOVERNMENT.

A. Succession of Leadership. The line of succession for C**ontinuity of Government (COG)** for Bryan County is as follows:

1. County Data

   a. Chairman, County Commissioners

   b. Vice Chair, County Commissioners.

   c. County Commissioner

2. Cities/Towns

   a. Mayor

   b. Vice Mayor

   b. Senior Commissioner, Council member or Trustee.

3. Line of succession for the Emergency Management Director will be the Deputy Director.

4. Line of succession for each agency/department head is according to the department rules and/or standing operating procedures established by each department.

5. **Continuity of Operations (COOP)** will be ensured by identifying alternate locations for each EOC and department command post. Procedures will be developed for the process to determine when to relocate, what staff and equipment is needed and what documentation will be transferred or duplicated.

B. Preservation of Records.

In order to provide normal government operations following a disaster, **vital records must be protected**. The principal causes of damage to records are fire and water; therefore, essential records will be protected accordingly in the County Courthouse or in local safety deposit vaults.

VII. ADMINISTRATION AND LOGISTICS.

A. Emergency Authority.

1. A summary of existing Oklahoma legislation pertaining to emergency management is listed in Section IX.

2. Provisions for local emergency powers are found in the Oklahoma Code and local ordinances which include but are not limited to:

a. Declaration of States of Emergency.

b. Contracts and Obligations.

c. Control of Restricted Areas.

d. Liability.

B. Agreements and Understandings.

Should county resources prove to be inadequate during an emergency, requests will be made for assistance from other local jurisdictions, higher levels of government, and other agencies in accordance with existing or emergency negotiated mutual-aid agreements and understandings. Such assistance may take the form of equipment, supplies, personnel, or other available capability. All agreements and understanding will be entered into by duly authorized officials and will be formalized in writing whenever possible.

C. Reports and Records.

Required reports will be submitted to the appropriate authorities in accordance with instructions in annexes to this plan. All records of emergency management activities will be maintained at the EOC.

D. Relief Assistance.

All individual disaster assistance provided by the government will be administered in accordance with policies set forth by the Oklahoma Department of Emergency Management and those Federal agencies providing such assistance.

E. Consumer Protection.

Consumer complaints pertaining to alleged unfair or illegal business practices will be referred to the Oklahoma Attorney General's Consumer Protection Division.

F. Nondiscrimination.

There will be no discrimination on grounds of race, color, religion, nationality, sex, age, or economic status in the execution of emergency management functions. This policy applies to all levels of government, contractors, and labor unions.

G. Administration and Insurance Claims.

Insurance claims are normally handled on a routine basis by the commercial insurance companies and adjustment agencies. Complaints should be referred to the Oklahoma Insurance Commissioner. Adjusters of private insurance companies are usually dispatched to a disaster area to assist with claim problems.

H. Management of Manpower (Paid and Volunteer).

Manpower, both paid and volunteer, will be managed by the County Emergency Management Director.

I. Duplication of Benefits.

No person will receive assistance with respect to any loss for which he has received financial assistance under any other program or for which he/she has received insurance or other compensation. This also applies to business concerns or other entities.

J. Use of Local Firms.

When major disaster assistance activities may be carried out by contract or agreement with private organizations, firms or individuals, preference will be given, to the extent feasible and practicable, to those organizations, firms and individuals residing or doing business primarily in the areas affected.

K. Preservation of Historic Properties.

The Oklahoma Historical Preservation Officer (OHPO) will be notified when the Governor declares that a state of emergency exists as the result of a disaster. The Director, Oklahoma Department of Emergency Management, will arrange for the OHPO to identify any existing historic properties within the designated disaster area.

VIII. PLAN DEVELOPMENT AND MAINTENANCE.

A. The contents of this plan must be known and understood by those people responsible for its implementation. The County EM Director is responsible for briefing staff members and county officials concerning their role in emergency management and the contents of this plan in particular.

B. Department directors are responsible for development and maintenance of their respective segments of this plan and their appropriate supporting SOPs as stated here and set forth in Section VIII of each Annex.

C. The Policy Group will ensure an annual review of this plan is conducted by all officials involved in its execution. The EM Director will coordinate this review and any plan revision and distribution found necessary.

D. The plan will be tested at least once a year in the form of a simulated emergency exercise in order to provide practical, controlled experience to those emergency managers tasked within the plan.

IX. AUTHORITIES AND REFERENCES.

A. Legal Authority.

1. Federal.

a. Federal Civil Defense Act of 1950, Pub. L. 81- 920 as amended.

b. Disaster Relief Act of 1974, Pub. L. 93-288 as amended.

c. Emergency Management and Assistance, 44 U.S. Code 2.1 (Oct. 1, 1980).

d. Homeland Security Act of 2002, Pub. L. 107-296.

2. State of Oklahoma.

a. Oklahoma Emergency Management Act of 2003.

b. Compendium of state legislation related to emergency management.

Oklahoma Constitution, Art 6 Section 1-6.

3. Local. Legal authority for establishment of Emergency Management Organization(s):

Resolution Establishing Bryan County Civil Defense Emergency Services Act and Disaster Program, Ordinance Number 1081, October 8, 1985

B. References.

FEMA 20, Publications Catalog.

FEMA L-136, Radio Amateur Civil Emergency Service (RACES).

Oklahoma Department of Emergency Management Digest of State Laws.

State of Oklahoma Emergency Operations Plan.

APPENDICES

APPENDIX 1 - Incorporation of National Response Plan
APPENDIX 2 - Definitions
APPENDIX 3 - List of Acronyms

APPENDIX 1
INCORPORATION OF NATIONAL RESPONSE PLAN

The Robert T. Stafford Disaster Relief and Emergency Assistance Act (Public Law 93-288, as amended) provides the authority for the Federal government to respond to disasters and emergencies in order to provide assistance to save lives and protect public health, safety, and property.

The National Response Plan (NRP) is designed to address the consequences of any disaster or emergency situation in which there is a need for national response assistance. Copies of this plan are maintained at the State Emergency Operations Center and are available on the www.fema.gov website.

The plan describes the basic mechanisms and structures by which the Federal government will mobilize resources and conduct activities to augment State and local response efforts. To facilitate the provision of Federal assistance, the plan uses a functional approach to group the types of Federal assistance under fifteen Emergency Support Functions (ESFs). Each ESF is headed by a primary agency, which has been selected based on its authorities, resources, and capabilities in the particular functional area.

The plan has been incorporated into the State Emergency Operations Plan with State agencies assigned the task of cooperating with the appropriate Federal and local agencies in the coordination and implementation of the plan.

Local jurisdictions and agencies should review the NRP to better understand support that may be provided by federal agencies during an incident.

BLANK PAGE

APPENDIX 2
DEFINITIONS

AGENCY LIAISON OFFICER (ALO): Persons appointed by Director of designated state agencies who shall operate under the Director, Department of Emergency Management, during emergency periods to coordinate an agency's actions for providing effective relief and assistance in accordance with this plan and Public Law 93-288.

DISASTER: A dangerous event that causes significant human and economic loss and demands a crisis response beyond the scope of any single agency or service, such as the fire or police department. Disasters are distinguished from emergencies by the greater level of response required. Disaster requires resources beyond those available locally.

EMERGENCY: While an emergency may have been devastating, it is a dangerous event that does not result in a request for State or Federal assistance.

"EMERGENCY" AS PROCLAIMED BY THE GOVERNOR: Whenever, in the opinion of the Governor, the safety of Oklahoma and its citizens requires the exercise of extreme measures due to an impending or actual disaster, he may declare an emergency to exist in the state, or any part of the state, in order to aid individuals and local government.

ELECTROMAGNETIC PULSE (EMP): A phenomenon of a nuclear detonation which disrupts electrical transmission and radio sets in a similar manner to a direct hit by lightning.

EMERGENCY OPERATIONS CENTER (EOC): A centralized facility to be utilized by the governments for direction, control and coordination.

EMERGENCY PERIOD: The period of time immediately before, and/or immediately after the impact of a catastrophe when severe threats exist to human life, animals, other private and public property and/or the environment.

EMERGENCY SUPPORT TEAM: Teams of federal personnel formed by the Director, Federal Emergency Management Agency, Region VI, and deployed in a declared major disaster area to assist the federal coordinating officer in carrying out his responsibilities.

FEDERAL COORDINATING OFFICER (FCO): The person appointed by the President of the United States to operate under the Director, Homeland Security to coordinate federal assistance in a declared major disaster area under the provisions of Public Law 93-288.

APPENDIX 2
DEFINITIONS (CONT)

GOVERNOR'S AUTHORIZED REPRESENTATIVE (GAR): The person appointed by the Governor of Oklahoma in the Federal/State Disaster Assistance Agreement as his authorized representative to act in cooperation with the Federal Coordinating Officer.

LOCAL GOVERNMENT: Any county, city or incorporated town in the State of Oklahoma.

LOCAL MASS CARE CENTER: A place selected locally by the private volunteer groups to provide care for individuals dislocated during the emergency period. Services provided are lodging, feeding, registration, first aid and other social services.

MAJOR DISASTER: Any hurricane, tornado, storm, flood, high water, wind-driven water, earthquake, volcanic eruption, landslide, snow storm, explosion, or other catastrophe in any part of the United States which, in the determination of the United States, causes damage of sufficient severity and magnitude as to warrant major disaster assistance under Public Law 93-288 above and beyond emergency services by the federal government, to supplement the efforts and available resources of the state, local governments and disaster relief organizations in alleviation of the damage, loss, hardship, or suffering caused thereby.

NATIONAL WARNING SYSTEM (NAWAS): A protected full-time voice communications system which provides warning information throughout the nation.

OKLAHOMA DEPARTMENT OF EMERGENCY MANAGEMENT (OEM): The agency responsible for preparation and execution of emergency functions to prevent, minimize and repair injury and damage resulting from hostile actions or natural disasters as stated in the Oklahoma Emergency Management Act of 2003.

PUBLIC FACILITY: Any flood control, navigation, irrigation, reclamation, public power, sewage treatment and collection, water supply and distribution, watershed development, or airport facility, any non-federal aid street, road or highway and any other public building, structure or system.

RECOVERY PERIOD: That period of time subsequent to an emergency when economic recovery from disaster damage takes place, including the use of any available local, state, federal government and private resources.

VOLUNTEER SERVICE ORGANIZATION: Any organization which is non-government, nonprofit whose primary mission is to provide humanitarian support in times of need using public donated funds and volunteer personnel resources with or without a formal declaration of an emergency. (i.e.: American Red Cross, Salvation Army, etc.).

WATCH PERIOD: A period of time when meteorological conditions indicate a probability of severe weather phenomena.

APPENDIX 3
LIST OF ACRONYMS

ABLE	ALCOHOLIC BEVERAGE LAWS ENFORCEMENT COMMISSION
ARC	AMERICAN RED CROSS
ARM	AERIAL RADIOLOGICAL MONITOR
CAP	CIVIL AIR PATROL
CFR	CODE OF FEDERAL REGULATIONS
CFSA	CONSOLIDATED FARM SERVICE AGENCY
DAC	DISASTER APPLICATION CENTER
DEQ	DEPARTMENT OF ENVIRONMENTAL QUALITY
DFO	DISASTER FIELD OFFICE
DHS	DEPARTMENT OF HUMAN SERVICES
DOT	DEPARTMENT OF TRANSPORTATION
DPS	DEPARTMENT OF PUBLIC SAFETY
DR&R	DISASTER RESPONSE AND RECOVERY
DSR	DAMAGE SURVEY REPORT
DWI	DISASTER WELFARE INQUIRY
EAS	EMERGENCY ALERT SYSTEM
ELT	EMERGENCY LOCATOR TRANSMITTER
EMI	EMERGENCY MANAGEMENT INSTITUTE
EMP	ELECTROMAGNETIC PULSE
EMS	EMERGENCY MEDICAL SERVICE
EOC	EMERGENCY OPERATIONS CENTER
EPA	ENVIRONMENTAL PROTECTION AGENCY
EPCRA	EMERGENCY PLANNING AND COMM. RIGHT TO KNOW ACT
EPI	EMERGENCY PUBLIC INFORMATION
ESF	EMERGENCY SUPPORT FUNCTION
FEMA	FEDERAL EMERGENCY MANAGEMENT AGENCY
IC	INCIDENT COMMANDER
ICS	INCIDENT COMMAND SYSTEM
IS	INDEPENDENT STUDY
NAWAS	NATIONAL WARNING SYSTEM
NIMS	NATIONAL INCIDENT MANAGEMENT SYSTEM
NOAA	NATIONAL OCEANIC & ATMOSPHERIC ADMINISTRATION
NRCS	NATIONAL RESOURCES CONSERVATION SERVICE
NUDET	NUCLEAR WEAPONS DETONATION
NWR	NOAA WEATHER RADIO
NWS	NATIONAL WEATHER SERVICE
NWWS	NOAA WEATHER WIRE SERVICE
OEM	OKLAHOMA DEPARTMENT OF EMERGENCY MANAGEMENT
OHP	OKLAHOMA HIGHWAY PATROL
OIC	OFFICER IN CHARGE
OKOHS	OKLAHOMA OFFICE OF HOMELAND SECURITY
OLETS	OKLAHOMA LAW ENFORCEMENT TELECOMMUNICATIONS SYSTEM

APPENDIX 3
LIST OF ACRONYMS (CONT)

OMD	OKLAHOMA MILITARY DEPARTMENT
OSA	OKLAHOMA STATUTES ANNOTATED
OSBI	OKLAHOMA STATE BUREAU OF INVESTIGATION
OSC	ON-SCENE COORDINATOR
PIO	PUBLIC INFORMATION OFFICER
RACES	RADIO AMATEUR CIVIL EMERGENCY SERVICE
SAR	SEARCH AND RESCUE
SARA	SUPERFUND AMENDMENTS AND REAUTHORIZATION ACT
SARDA	STATE AND REGIONAL DEFENSE AIRLIFT
SOP	STANDARD OPERATION PROCEDURE
USC	UNITED STATES CODE
USDA	UNITED STATES DEPARTMENT OF AGRICULTURE
USDHS	UNITED STATES DEPARTMENT OF HOMELAND SECURITY
VOAD	VOLUNTEER ORGANIZATIONS ACTIVE IN DISASTERS

ANNEX A
DIRECTION AND CONTROL

I. PURPOSE.

This annex establishes workable procedures for the development, manning, and operation of a control center(s) within Bryan County to coordinate government's response to emergency situations. The center(s) will be activated when the threat of loss of life and/or excessive property damage may occur. This applies to both natural and manmade disasters.

II. CONCEPT OF OPERATIONS.

General.

An effective Emergency Operations Center (EOC), also referred to as a "Multi-agency Coordination System" (MACS) in the **National Incident Management System (NIMS)**, is the key to successful response operations. The gathering of persons in authority, along with supporting staff personnel, in one location facilitates the prompt and effective employment of resources. It also enhances the coordination of activities that will ensure all required tasks are accomplished without duplication of effort. The Emergency Management Director will activate the EOC and alert those persons designated to occupy EOC positions when a danger is recognized.

III. TASK ORGANIZATION AND RESPONSIBILITIES.

A. General.

1. There are actually three (3) parts to the County Direction and Control Organizations. Part one is the Policy Group, which is comprised of the County Commissioners. This is the group making the highest decisions and/or approvals. Part two is the Coordination Group which is comprised of the major county department/agency heads who will coordinate their efforts and apply the actions most needed to the emergency situation at hand. The majority of these service supervisors will be located at the EOC. The coordination of activities of the Emergency Services will be under the direction of the Chief of Operations and/or Emergency Management Director(s). Their activities and responsibilities are contained in their respective annexes in the plan. Part three is the Operations Staff which is comprised of several staff officers or Officers-in-Charge (OIC) of sections that have many functions that are vital when operating in emergency situations. The functional responsibilities for each OIC will be referred to in annexes to this plan. Each OIC will be located in the EOC. He/she will work under the direction of the Emergency Management Director and will coordinate with the Coordination Group department or agency heads when necessary.

2. The EOC may be activated by any policy group member when it appears that any portion of Bryan County is, or may be, threatened with loss of life or extensive property damage.

3. Each department or agency director tasked to serve on the Coordination Group, or his designated replacement, will immediately report to the EOC to direct and coordinate his agency's response to the emergency confronting the community.

4. The appropriate County Emergency Management Director(s) will maintain and activate the procedures to recall/assemble the EOC staffs. (See Appendix 3 to this Annex. EOC Activation Checklist.)

B. Task Assignments and Responsibility.

1. Policy Group.

a. The elected or legally appointed officials are responsible for the protection of life and property within the boundaries of their jurisdictions.

b. The policy group will exercise all normal powers contained in the State of Oklahoma Emergency Management Act of 2003 and local ordinances and resolutions, in performance of direction and control duties for emergencies confronting the citizens.

c. Control of all crisis operations is vested in the policy group and may be delegated to responsible individuals as stated in this plan, or to an appropriate designee as shift arrangements dictate.

2. Emergency Services Coordination Group.

a. Chief of Operations (Selected and Appointed by the Policy Group) is responsible for (with assistance by the EOC Staff Coordinator/Deputy):

(1) Coordinating EOC staff activities to supply aid to disaster victims or areas.

(2) Makes routine decisions and advises the policy group on courses of action and/or decisions required.

(3) Responsible for insuring those local agencies who have been assigned primary responsibility for any of the emergency support functions identified in the National Response Plan are available in the EOC to facilitate coordination with the state and federal agencies providing the assistance.

(4) Responsible for keeping the EOC in an operational ready state.

(5) Assigns qualified people to EOC staff positions and keeps a current roster of the staff.

(6) Responsible for developing an alert system and for alerting the policy group and the EOC staff of any impending emergency.

(7) Responsible for activating the EOC (after consulting with the

policy group if time permits) and recalling the EOC staff.

(8) Supervises the EOC Operations staff and coordinates with the Coordination Group to assure timely aid or assistance is rendered to victims of the emergency.

(9) Schedules the EOC staff for a two shift, around the clock, operation.

(10) Arranges for feeding of the staff.

(11) Updates the alert/staff roster and this Annex at least once each year.

(12) Holds briefings for the policy group and the coordination group to update their knowledge of the emergency situation.

(13) Makes provisions for displaying pertinent information, (major events/occurrences, damage survey information, requests for assistance, etc.), in the EOC for the policy group and the coordination group.

(14) Coordinates with the Policy Group and makes provisions for relocating staff members to an alternate EOC if the primary EOC becomes inoperable.

(15) Makes provisions for notifying all agencies involved in the emergency situation, (local, state, federal, and the private sector), that operations have been shifted to the Alternate EOC if the primary EOC becomes inoperable.

b. Resources Coordinator.

(1) Compile an inventory of personnel, equipment, materials and facilities which may be needed in an emergency. This inventory will constitute the County Resource Data Book.

(2) Provide manpower, supplies, material and/or equipment required by other coordinators to provide relief to the emergency situation.

(3) Ration or establish priority use of critical or scarce resources during any emergency.

(4) Maintain records of all expenditures for emergency resources obtained and give them to the appropriate official for disposition.

(5) As developed, uses the equipment typing system in accordance with the NIMS.

3. The EOC Operations Staff.

a. Shall provide technical support and advice to the policy group and coordination group. This staff functions under the supervision of the EM Director.

b. The Operations Staff is composed of the following sections. Each requires an OIC and other support personnel.

(1) Communications/Message Center.

(2) Damage Assessment.

(3) Public Information.

(4) Administration.

(5) Transportation.

(6) Warning/Reporting.

(7) Shelter Mgmt/Evacuation.

IV. CONTINUITY OF GOVERNMENT.

During any large scale emergency the EOC will become the center for all local government control. It will be from this center that all decisions and direction will emanate to the public concerning the emergency. Lines of succession for critical personnel have been established and presented in Section VI, Basic Plan.

V. ADMINISTRATION AND LOGISTICS.

A. Emergency Operations Centers.

1. Primary EOC.

a. Location.

The County Emergency Management Office is designated as the Emergency Operations Center for Bryan County. Towns in Bryan County may establish EOCs in their facilities as required.

b. Facilities in the Bryan County EOC.

(1) The working area includes several offices and the communication center.

(2) Communications equipment necessary for conducting emergency operations is in place.

(3) An emergency generator is available at the EM Office to provide backup power for operating lights and radios. Fuel to operate the generator for 24 hours or more is provided by a dual fuel propane/natural gas system.

(4) Kitchen facilities at the Durant EOC are adequate to provide food for the EOC staff. Also, restaurants are nearby and food may be catered to the EOC as needed, if the situation permits.

c. Dependent on the type and severity of the situation; the city offices and equipment at the city hall, will be available to support emergency operations affecting the city of Durant.

2. Alternate EOC.

Should the primary county EOC become unusable, an alternate county EOC will be established at either the Durant Police Department, or the Calera EM Office. Communication equipment will be augmented with any that can be brought from the primary EOC. Radio equipped county-owned vehicles will augment alternate EOC requirements. Nearby restaurants will need to be used for feeding of EOC staff, or food may be catered in as needed.

3. Incident command post.

During emergency operations it may be necessary to set up an incident command post to coordinate response activities at the onsite location. Incident commanders (fire service, law enforcement officers or first responder on the scene) will be responsible for establishing such required command posts.

B. Reports and Records.

The type of emergency dictates the reports required.

1. Initial Disaster Report.

This short report is designed to provide the Oklahoma Department of Emergency Management EOC with basic information about any emergency situation. See Appendix 4, Tab A, this Annex. Damage assessment reporting is addressed in Annex P.

2. Events Log.

A record of major events and response actions will be compiled by members of the EOC support staff to provide a history of actions taken. See Appendix 4 Tab B.

3. Other Reports.

Additional report forms can be found in other annexes of this plan.

C. Media.

News conferences will be held at regular intervals. Media personnel may be allowed into the EOC in small numbers when accompanied by the Public Information Officer.

VI. PLAN DEVELOPMENT AND MAINTENANCE.

The Emergency Management Director is responsible for the content of this annex and for its currency. All EOC staff members must be familiar with its content.

VII. AUTHORITY AND REFERENCES.

References.

FEMA, Guide for Increasing Local Government Emergency Management Readiness During Periods of International Crisis; State and Local Guide (SLG) 100.

Digest of Oklahoma Laws.

FEMA, SLG 101, Guide of All-Hazard Emergency Operation Plans.

APPENDICES

APPENDIX 1 - Emergency Services Organization
TAB A - Organization of the EOC Coordination Group
TAB B - Organization of the EOC Operations Staff
APPENDIX 2 - Organization Assignment Roster
APPENDIX 3 - EOC Activation Checklist
APPENDIX 4 - EOC Administration Section
TAB A - Situation Report
TAB B - EOC Daily Log of Events
TAB C - EOC Staffing Roster
TAB D - Security Log
TAB E - Sample Disaster Declaration

BLANK PAGE

BRYAN COUNTY

Policy Group

County Commissioners or
Mayor/City Council

Emergency Operations Center (EOC)

COORDINATION GROUP

See Tab A of this Appendix for

Emergency Operations Center (EOC)

OPERATIONS GROUP

See Tab B of this Appendix for breakout.

Note: See Appendix 2 to Annex A for position assignments by name.

BLANK PAGE

TAB A TO APPENDIX 1

ORGANIZATION OF THE
EOC COORDINATION GROUP

BRYAN COUNTY

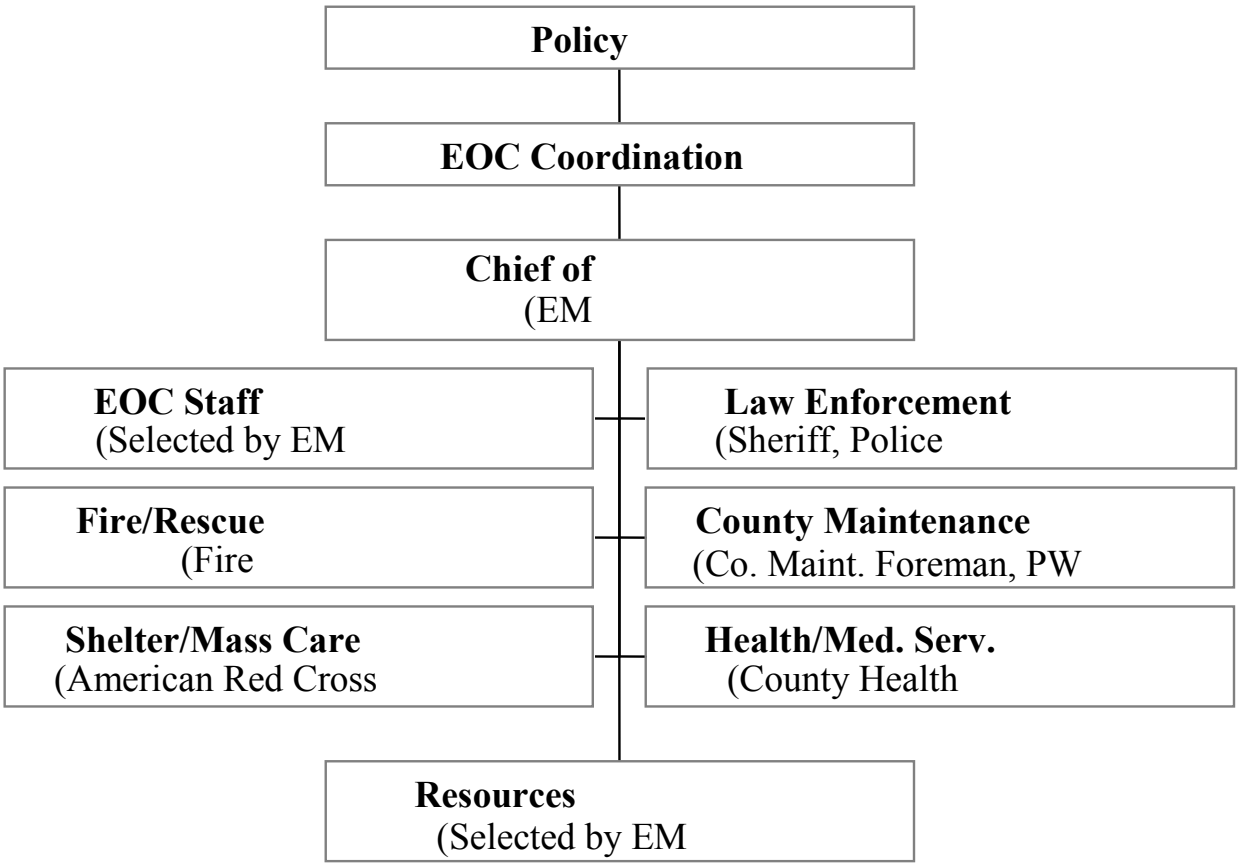

Note: See Appendix 2 of Annex A for specific positions

BLANK PAGE

ORGANIZATION OF THE EOC OPERATIONS STAFF

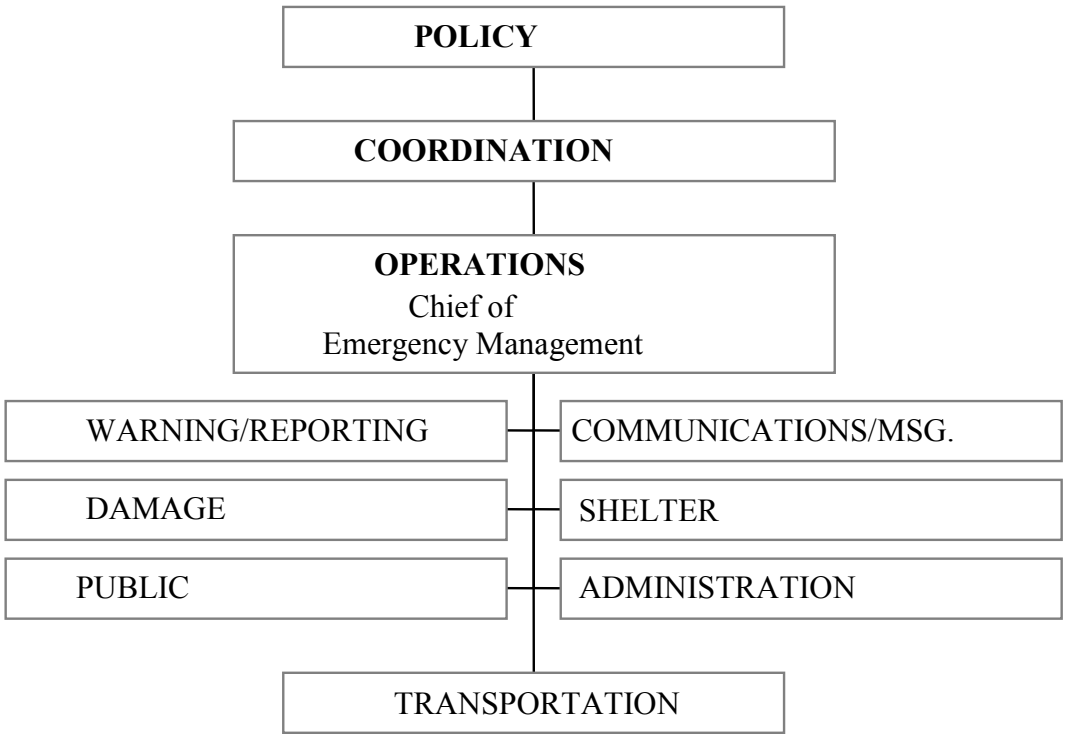

BLANK PAGE

ANNEX A
DIRECTION AND CONTROL

APPENDIX 2
ORGANIZATION ASSIGNMENT ROSTER
BRYAN COUNTY

I. POLICY GROUP/COUNTY: Name Phone Number

County Commissioners, Courthouse,	924-2201	
District # 1, Ron Boyer	Shop:924-5814	Cell 303-570-5835
District # 2, Tony Simmons	Shop: 283-3711	Cell 916-1646
District # 3, Jay Perry	Shop: 295-3737	Cell 916-5218

Key personnel
Emergency Manager, James Dalton, 924-3661
Sheriff – Ken Golden, 924-3000
S.O.D.A Director, Tommy Shepherd, 920-1388
LEPC Chairperson, James Dalton, 924-3661
DEQ Environmental Specialist, Pam Watson, 920-2037
OHP Troop E Commander, Jeff Sewell, 924-2601

II. POLICY GROUP/CITY: To be completed as/when applicable.

A. Durant City Hall –931-6605
Mayor: Stewart Hoffman
Vice Mayor: Destry Hawthorne
City Council Members:
Jerry Tomlinson Chad Hitchcock Bill Orr

Key personnel

Emergency Manager, James Dalton, 924-3661		Cell 775-3661
Fire Chief, Roger Joines, 924-8459		Cell 775-0361
Police Chief, David Houser, 924-3737		Cell 931-7107
Acting City Manager Donnalla Miller	924-7222	Cell 434-2223

B. Each Town Bryan Co
Mayor:
Vice Mayor:
City Council Members:

Key personnel
Emergency Manager
Fire Chief
Police Chief

* Unless otherwise specified all telephone numbers are area code 580.

III. COORDINATION GROUP:

Chief of Operations, James Dalton, 924-3661

Deputy EM/EOC Ops. Staff Coordinator, Kenneth Eppler, 924-3661

Law Enforcement/County, Sheriff Ken Golden, 924-3000

Fire/Rescue Service, FD, Roger Joines, 924-8459

Health/Med.Serv
(County Health Dept. Admin.), Juliann Montgomery, 924-4285

County DHS Director, Ken Province, 931-2504 (Durant) 889-3394 (Atoka)

AllianceHealth Durant Matt Frye, COO, 702-757-8163
Suzette Davidson, Qualtiy, 260-894-1340
Brian Bradley, CNO, 405-249-2473

Shelter/Mass Care Service, 800-494-0275(American Red Cross)
Rene Beezley 918-421-0904 (Disaster Coordinator)
Roger Rush 580-624-0765 (Red Cross Local Representative)

County Maintenance Coordinator
County Maintenance Foreman/PW Dept.

Independent School District Services
(Superintendent(s) of Schools)

Floodplain Administrators

Bryan County, Joe Barrett 924-4687
City of Durant, Marty Pope 931-6612

Public Utility Services**:** (Representatives from each utility)

ELECTRIC: Name of Company, Address, Phone Numbers

OG&E, Robert Holliday, 580-920-8421
Southeastern Electric, Hwy 70 East, Durant, 924-2170

NATURAL GAS: Name of Company, Address, Phone Numbers

ONG, 523 West Evergreen, Durant, 924-4777, 1-800-664-5463 (24 hour)

* Unless otherwise specified all telephone numbers are area code 580.

TELEPHONE: Name of Company, Address, Phone Numbers

AT&T, 1-800-286-8313 (Business) 1-800-246-8464 (Residential)
Cherokee Tele Company, 1-580-434-5375

IV. EOC DIRECTION AND CONTROL STAFF:

Communications/Message Center, Tami Arnold

Damage Assessment, Marty Cook

Public Information, James Dalton

Warning/Reporting Section, Geary Beshirs

Shelter/Evacuation Section, Geary Beshirs

Administration, County Clerk, City Clerk

Transportation, Billy Whittenburg

V. AMERICAN RED CROSS:

Durant Office, 401 S. 4th Ave, Durant, 800-494-0275.

VI. SALVATION ARMY: Divisional Headquarters for Oklahoma and Arkansas, 5101 N. Pennsylvania, OK City. PH: 405-840-0735

VII. MINISTERIAL ALLIANCE: Bill Ledbetter

VIII. AMATEUR RADIO OPERATORS/CLUB: Terry Gravholt

IX. STORM SPOTTERS: See Resource Document, Emergency Management Office

X. OTHER VOLUNTEERS: See Resource Document, Emergency Mgmt Office

* Unless otherwise specified all telephone numbers are area code 580.

APPENDIX 3

EOC ACTIVATION CHECKLIST

The following activities will be accomplished when a decision is made to activate the County EOC:

_____Notify EOC staff first shift assignees as required.

_____Activate additional telephones, as required.

_____Assign security to EOC entrance.

_____Check radios and other communication equipment.

_____Brief EOC personnel on the situation.

_____Review operating procedures.

_____Initiate Departmental Checklists.

_____Notify Oklahoma Dept. of Emergency Management.

_____Obtain phones for media use, if required.

BLANK PAGE

ANNEX A
DIRECTION AND CONTROL

APPENDIX 4
EOC ADMINISTRATION SECTION

I. PURPOSE.

This section provides instructions for the administration of the EOC; arranges for 24-hour staffing of the EOC and duty rosters; specifies reports required by the Oklahoma Department of Emergency Management Organization; and plans for the expansion of the EOC to accommodate an enlarged staff.

II. GENERAL.

The EOC Staff Coordinator, supervised by the Emergency Management Director, is responsible for supervising staff shift arrangements, housekeeping, billeting, feeding and administrative support of the EOC staff. He is also responsible for coordinating security of the facility with the County Sheriff. He will also supervise the preparation of recurring reports and their timely transmission. During normal periods these functions will be performed by the Emergency Management Director.

III. CONCEPT OF OPERATIONS.

A. Normal Peacetime Readiness.

Prepare and review plans and SOPs for internal EOC operations; inform county officials of EOC status; ensure the EOC is properly equipped for relocation and emergency operations; coordinate with county departments to ensure their readiness to conduct operations from the EOC; pre-stock administrative materials, forms and supplies in the EOC; plan expansion of the EOC into other available space for feeding of the EOC staff during emergency operations.

B. Increased Readiness.

Carry on normal readiness responsibilities; advise Policy Group on measures to increase readiness of the EOC and emergency service organizations; initiate alerting and mobilization of shelter/mass care organization if required; activate EOC, review EOC procedures, brief EOC staff, make final preparations for emergency operations; obtain necessary supplies not already stocked; coordinate feeding of EOC staff; establish security and EOC pass system, if required.

C. Emergency Period.

Brief Policy Group regularly on status of operations; exercise staff supervision of the EOC staff and exercise other authority delegated by the Policy Group; ensure each EOC element maintains adequate written records of messages, directives, requests and resulting actions; provide support to emergency service coordinators and EOC staff and administrative items needed for efficient operations; ensure reports are dispatched promptly.

IV. REPORT FORMS.

Situation reports, staffing rosters, readiness reports and other common reports will be prepared by the administration section based upon input of the entire EOC staff.

TABS

TAB A - Situation Report
TAB B - EOC Daily Log of Events
TAB C - EOC Staffing Roster
TAB D - Security Log
TAB E - Sample Disaster Declaration

SITUATION REPORT

Type of Occurrence _____Date & Time Occurred _____

Location (City/Town)_____ Reported By_____

Phone #_____

Number of people: Injured_____ Dead_____

Number of dwellings: Damaged_____ Destroyed_____

Number of businesses: Damaged_____ Destroyed_____

Utilities out of order: _____

Roadways (Names/Route): Closed (damage)_____ Closed (security)____

Help on Scene: Red Cross_____ Salvation Army_____ Nat'l Guard____

What help is needed: Shelter_____ Feeding_____ Medical_____

10. Agencies/Organizations Notified:

NAME	TELEPHONE	CONTACT	COMMENTS

Additional Information:_____

_____

Report Received By:_____Date:_____

Time:_____

BLANK PAGE

TAB B TO APPENDIX 4
EOC DAILY LOG OF EVENTS

UNIT LOG	UNIT NAME:	**TASK #**	DATE PREPARED: TIME PREPARED:
TASK NAME:		FOR OPERATIONAL PERIOD #	PREPARED BY (PLANNING):
UNIT LEADER NAME:		POSITION:	

PERSONNEL ROSTER ASSIGNED	
NAME	ICS POSITION

ACTIVITY LOG (CONTINUE ON REVERSE)	
TIME	MAJOR EVENTS

A UNIT IS ANY SINGLE FUNCTIONAL ENTITY (DISPLAYED AS A BOX) WITHIN THE ICS ORGANIZATION CHART	**ICS 214**

ANNEX A
DIRECTION AND CONTROL

BLANK PAGE

ANNEX A
DIRECTION AND CONTROL

TAB C TO APPENDIX 4
EOC STAFFING ROSTER

Position Number	Position	Phone Ext.	1st Shift	2nd Shift

BLANK PAGE

TAB D TO APPENDIX 4

SECURITY LOG

NAME	AGENCY	TIME IN	I.D. #	TIME OUT

BLANK PAGE

TAB E TO APPENDIX 4
SAMPLE DISASTER DECLARATION

DISASTER EMERGENCY PROCLAMATION

WHEREAS, on _____, _____ having occurred in _____, Oklahoma, causing _____ known fatalities and _____ injuries, with considerable damage to public and private properties;
and

WHEREAS, immediate attention is required to protect public health, reduce further damage, insure public safety and render emergency relief;
and

WHEREAS, I (We) _____, County Commissioner/Mayor of _____, Oklahoma, do find that the aforementioned conditions constitute a threat to the safety and welfare of the county (city), and create an emergency disaster situation within the meaning of Section 683.3, Oklahoma Emergency Management Act of 2003, as amended;

NOW, THEREFORE, I (We) _____, County Commissioner/Mayor, acting under the power vested in me under do hereby declare _____ to be a disaster area, entitled to aid, relief and assistance and do hereby direct the implementation of the County/City Emergency Operations Plan.

IN WITNESS WHEREOF, I have hereunto set my hand and seal to this instrument on this _____ day of _____ in the year of our Lord, two thousand and _____, at _____, Oklahoma.

THIS PROCLAMATION SHALL EXPIRE AFTER SEVEN (7) DAYS, UNLESS OTHERWISE EXTENDED BY ME (US).

County Commissioner/Mayor

County/City Clerk

NOTE: THIS IS A SAMPLE THAT MAY BE MODIFIED TO IDENTIFY THE POLITICAL SUBDIVISION AND TYPE OF EMERGENCY AS DETERMINED BY THE CHIEF EXECUTIVE WHO ISSUES THE PROCLAMATION OR AS NECESSARY.

BLANK PAGE

I. PURPOSE.

This Annex provides information concerning the Bryan County Emergency Communications Systems. The procedures outlined in this Annex will be used by Emergency Management officials to manage communications in the event of an emergency.

II. TASK ORGANIZATION AND RESPONSIBILITIES.

Task Assignments.

A. Emergency Management Director will:

During non-emergency time, be responsible for developing the emergency communications system required to support EOC communications. He/she is also responsible for developing a communications system to support crisis operations to include internal operations and external communications with adjacent jurisdictions and the State of Oklahoma EOC.

B. Communications Officer will:

1. During non-emergency periods, provide advice and technical assistance to the Emergency Management director in the planning of emergency communications.

2. During emergency operations, supervise all EOC communications activities.

3. Establish an EOC message center and procedures to manage, record and distribute incoming and outgoing messages.

C. Radio Operators will:

1. Be responsible for proper use of communications equipment and procedures at designated stations.

2. Be responsible for proper handling of messages.

D. Switchboard Operator (if employed) will:

Be responsible for screening and routing of all incoming telephone calls. Those pertaining to emergency operations will be directed to the EOC.

E. Law Enforcement Department.

Law enforcement officers assigned to shelters will provide alternate communications using portable radio units.

III. DIRECTION AND CONTROL.

A. The Emergency Management Director, under the direction of the Policy Group, at the county level, has overall responsibility for the EOC and the communication systems needed to operate in an emergency.

B. The Communications Officer, under the supervision of the Emergency Management Director, is responsible for the activation and operation of all communications systems in the EOC and the associated processing of messages.

C. Radio officers and operators from other departments, while under the control of their own office and operating their equipment, will be responsible for knowing and implementing the procedures outlined in this Annex as well as their department standard operating procedures (SOPs).

D. During an emergency, the various code systems used for brevity will be discontinued and normal speech will be used to ensure comprehension during transmission. In addition, local time will be used during transmission and recording of messages.

IV. ADMINISTRATION AND LOGISTICS.

A. Communications Protection.

1. Radio.

a. Electromagnetic Pulse (EMP).

(1) One of the effects of a nuclear detonation that is damaging to communications equipment over a wide area is EMP. To avoid EMP, radios will be disconnected from antennas and power sources if a nuclear attack warning is received.

(2) Portable radios will be utilized as a backup during the initial attack period to assist in maintaining limited communications with field operations and shelters.

(3) Telephones will be utilized as the primary means of communications until they become inoperable.

(4) The above procedures will be followed until an ALL CLEAR message is received.

b. Wind Damage.

The communications officer will prepare for securing, or replacement, of antennas in the event of high winds.

2. Telephone (Common Carrier).

a. All EOC communications equipment including telephones must have high maintenance priority and should be operational at all times.

b. The communications officer will ensure that all EOC telephones have been placed on the telephone companies' priority restoration list.

B. Security.

Due to the vital role of communications during emergency operations, particularly for defense purposes, the Emergency Management Director may investigate the personal background of any communications personnel assigned to the EOC. Due to the stress and urgency of this work, only stable, reliable people should be assigned communications duties.

C. Training.

1. Each department assigning personnel to the EOC for communications purposes is responsible for assuring that these individuals are familiar with all department communications operating procedures.

2. Additional training for inexperienced and Amateur Radio operators on EOC communications equipment and procedures will be provided by the Communications Officer, as required.

V. PLAN DEVELOPMENT AND MAINTENANCE.

The Communications Officer is responsible for maintaining and updating this Annex annually.

VI. AUTHORITY AND REFERENCES.

References.

1. FEMA, State and Local Communications and Warning Systems Engineering Guidance, CPG 1-37, Washington D.C.

2. FEMA, Section 2, Guide for Increasing Local Government Emergency Management Readiness During Periods of International Crisis; State and Local Guide (SLG) 100.

3. FEMA, Electronic Pulse Protection Guidance, CPG 2-17, Volumes I, II, & III.

4. OK Dept. of Emergency Management, Oklahoma RACES Plan.

APPENDICES

APPENDIX 1 - Message Log
APPENDIX 2 - Bryan County Communication Plan

Appendix 1
Communications Log

COMMUNICATIONS LOG	**TASK #**	DATE PREPARED: TIME PREPARED:
FOR OPERATIONAL PERIOD #	TASK NAME:	
RADIO OPERATOR NAME (LOGISTICS):	STATION I.D.	

LOG

TIME	STATION I.D. FROM	STATION I.D. TO	SUBJECT

PAGE __ OF __	**ICS 309**

BLANK PAGE

Appendix 2

Bryan County Communication Plan 2016

The Bryan County Oklahoma Communication plan has been developed out of a desire to embrace the Statewide Communications Interoperability Plan (SCIP). The Statewide Communications Interoperability Plan (SCIP) is a locally-driven, multi-jurisdictional and multi-disciplinary statewide plan to enhance emergency communications. The SCIP has been developed by the Oklahoma Office of Homeland Security. The purpose of the Oklahoma SCIP, according to the Oklahoma Department of Homeland Security, is "to serve as a central point of reference and operational roadmap for stakeholders committed to meeting the standard of public safety communications interoperability that has been set by the state".

The Oklahoma Department of Homeland Security has published the "Oklahoma Field Operations Guide" to serve as a reference for interoperability within the State of Oklahoma.

While adopting the "Oklahoma Field Operations Guide" as the general framework for agency interoperability, Bryan County has developed this Communication Plan in order to outline and document communication and interoperability best practices as they specifically apply to Bryan County Oklahoma.

The common goal of public safety entities is the welfare of the public and protection of property. Communications interoperability is necessary to optimize results of the actions of public safety entities. In order to be able to provide efficient services to the public, and ensure the safety of first responders, this plan will outline best practices and SOP for communications within and between public safety entities.

Public Safety Agencies

Public Safety Agencies in Bryan County fall into four major categories:

1. Law Enforcement- including Sheriff, City Police Departments, University, Tribal, and Oklahoma Department of Public Safety (DPS).
2. Fire- including paid and volunteer fire departments.
3. EMS- including paid and volunteer EMS agencies.
4. Emergency Management.

Each agency has its own communication needs and capabilities but, at times, they all share the need for interoperable communications.

Bryan County Radio Frequencies
(All Frequencies Are Narrow Band as of 1/1/2013)

Law Enforcement:

Department	Receive	Transmit	Tone
BRYANSO	153.965	158.970	151.4
BRYANEM2	155.715	155.715	
SOSUPD	155.640	155.640	118.8
DURANTPD	155.0925	153.7625	110.9
DURANTTA	155.760	155.880	
OKNET1	155.670	155.670	
OKLAW1	155.490	155.490	
CALERAPD	154.8225	154.8225	107.2

Fire:

Department	Receive	Transmit	Tone
ACHILEFD	155.6175	155.6175	136.5
BRYANFR	153.845	155.070	103.5
BRYANFG	155.145	155.145	
BRYANRIT	158.7825	158.7825	
BENNFD	154.0625	154.0625	206.3
BOKFD	155.055	155.055	
CADDOFD	158.805	158.805	
COLBFD	151.070	159.075	186.2
CALERAFD1	154.025	158.940	173.8
CALERAFD2	155.955	155.955	162.2
DURANTFD	154.160	154.160	141.3
DURANTFR	151.2725	156.045	151.4
SILOFD	154.340	154.340	
OKFIRE1	154.130	154.130	
STFORR	159.45	159.45	
FRENYFD	153.125*	153.125*	156.7
WBCFD	154.220	154.220	

*No Corresponding License Found in FCC Database

EMS:

Department	Receive	Transmit	Tone
VMED28	155.340	155.340	
VMED29	155.3475	155.3475	156.7

School:

DURANTPS	151.925	151.925	114 (DCS)

Emergency Management:

BRYANEM1	156.240	159.135	162.2
STEMEOC	155.235	155.235	
BRYANEM2	155.715	155.715	

Public Works:

DURANTPW	155.76	155.76	
CALERAPW	158.880	158.880	136.2

VTAC:

Calling	VCALL10	155.7525	CSQ/156.7
Tactical	VTAC11	151.1375	CSQ/156.7
Tactical	VTAC12	154.4525	CSQ/156.7
Tactical	VTAC13	158.7375	CSQ/156.7
Tactical	VTAC14	159.4725	CSQ/156.7

Radio Programming Recommendations

Not all Public Service agencies in Bryan County have the same type of radio equipment. In order to avoid confusion and delay when changing channels to the channel assigned by the Comm Center, all radios should be commonly programmed for the first 26 channels across the county. All channels will be given a maximum of an 8 character name for uniformity across all disciplines. Entities may program channels above 26 in any order they prefer.

Name	Receive Freq	Transmit Freq	Tone (Xmit Only)
BRYANEM1	156.240	159.135	162.2
STEMEOC	155.235	155.235	
BRYANSO	153.965	158.970	151.4
DURANTPD	155.0925	153.7625	110.9
DURANTFD	154.160	154.160	141.3
DURANTFR	151.2725	156.045	151.4
DURANTPW	155.760	155.760	
BRYANCC	155.115	158.790	151.4
OKFIRE1	154.130	154.130	71.9
VCALL10	155.7525	155.7525	156.7
VTAC11	151.1375	151.1375	156.7
VTAC12	154.4525	154.4525	156.7
VTAC13	158.7375	158.7375	156.7
VTAC14	159.4725	159.470	156.7
OKLAW1	155.490	155.490	
VMED28	155.340	155.340	
OKNET1	155.670	155.670	
CALERAFD1	154.025	158.940	173.8
COLBFD	151.070	159.075	186.2
WBCFD	154.220	154.220	
CADDOFD	158.805	158.805	
ACHILEFD	155.6175	155.6175	136.5
BRYANFR	153.845	155.070	103.5
DURANTPS	151.925	151.925	114 (DPL)
SOSUPD*	155.640	155.640	118.8
DURANTTA	155.880	155.880	110.9
BRYANEM2	155.715	155.715	

Initial Call Out

The Bryan County Communications Center (Comm Center) is responsible for county-wide dispatching of Fire, EMS, Sheriff and all Police departments in the county. The Comm Center uses the Bryan County Sheriff repeater and Durant Police Department repeater for its radio communication. When department(s) are dispatched by the Comm Center, Comm Center will give the location of the incidents, type of incident, and the Tactical Channel that will be used by responders. The responding units or agencies should respond PAGE RECEIVED. Once the units are enroute, they should notify dispatch that they are enroute to the incident and include the authorized unit number that is listed on the CAD (Computer Aided Dispatch) and the destination of the incident in the radio transmission. Those responding in a POV (Privately Owned Vehicle) should not contact dispatch, since POV's are not authorized emergency response units and should not be accounted for. No individual or department should SELF DISPATCH to an incident. Units or departments should not contact dispatch or responding units to tell them that they are available for dispatch to an incident, since mutual aid is an understood concept and is on a case by case basis at the request of the Incident Commander on scene. This will allow the Comm Center to account for the units deployed and verify that the destination is correct. This will also increase the safety of those responding, and limit the amount of radio traffic per incident. In keeping with NIMS guidelines, plain language should be used when talking on the radio. Confusion will be avoided by refraining from the use of 10-codes which may vary in meaning from department to department.

On Scene

If more than one department will be responding to the incident, thought needs to be given to communications between the various agencies. If a combination of Fire, Law Enforcement, and EMS will be on the scene, a common frequency needs to be established for on-scene communications. This frequency will be determined by the Comm Center and the Comm Center will notify the Incident Commander of the frequency and the Comm Center will inform subsequently dispatched assets of the correct on-scene frequency upon dispatch.

If there is a change of Incident Command, the Comm Center must be notified of the time of the change and the name of the incoming commander.

Once the scene is secure and the assets are released, the Incident Commander should notify the Comm Center of the units who are being released and if they will be back in service and ready for deployment. Individual units should not call in when released.

Interoperability

Most public safety entities in Bryan County have their own frequency assignments which are used for their day to day operations. However, in a multiple discipline, multiple jurisdiction incident, we need to ensure that all responding entities have the ability to communicate with one another.

The Federal Communications Commission, at the request of the Department of Homeland Security has designated 5 VHF frequencies for license free use for the purpose of interoperability. These frequencies are commonly known as VTAC frequencies. These frequencies are not to be used for day to day operations. They may, however, be used freely on any incident where there are more than one discipline or jurisdiction involved.

Examples of Proper Use of the Tactical Channels:
As working channels for multiple fire departments fighting a fire together.

For coordination during a police chase through multiple jurisdictions where the agencies have no other communications link with each other.

For Communications during extended joint operations between multiple police agencies such as drug operations, riots, etc.

For coordination during recovery operations after a disaster such as a tornado when local, state, and federal officials require a common communications link.

Examples of Improper Use of the Mutual Aid Channels:

To support the administrative functions of a fire department which has a mutual aid agreement with an adjacent fire department to provide “move up” capability when a fire unit leaves its own coverage area.

To provide an extra working channel for a public safety agency supporting a special event.

To provide a surveillance channel for use between members of the same public safety agency.

When determining which communication frequency to use, thought must be given to the scope of the incident and the possibility for an expanding incident. While you may use your day to day frequency with a mutual aid partner on a small incident, an escalation of the incident which requires calling in outside assets will complicate the communication issues tremendously.

The best practice when working with another entity in an incident would be to do the following: Upon arriving on the scene, go to the VTAC frequency assigned by the Comm Center. The Comm Center should be specific such as VTAC11. If there is another incident in the county at the same time, the Comm Center will know that VTAC11 is already in use and the Incident Commander of the second incident will simply be assigned another VTAC channel for his operations by the Comm Center.

If the incident expands and other public service agencies such as Tribal, EMS, Law Enforcement, or Fire are called to the scene and a VTAC is already established as the communication frequency, you can be assured that they will be able to communicate once they arrive.

All mobile units should have the five VTAC frequencies programmed into them for interoperability and the Bryan County Fire Repeater frequency for dispatch contingency.

Swap Radios

Durant/Bryan County Emergency Management maintains a cache of approximately 20 swap radios. Swap radios are available for short term loan to outside agencies that do not have radios which are programmed with local interoperability frequencies such as VTAC channels. Requests for swap radios should be made by the incident commander directly to Emergency Management. The request should include the requester's name, contact information, number of radios needed, and type of incident. For a radio cache to be an effective shared resource, it should have the following characteristics:

Be fully charged, maintained, and ready for deployment at all times.

Include extra charged batteries and chargers for extended deployments.

Personnel available to transport the radios to the incident scene.

Technicians available for on scene support during the deployment.

Check-out and tracking procedures are used during the incident to ensure the radios are properly returned to the cache following the incident.
The swap radios are pre-programmed with approximately 100 channels and are 5 watt hand held units.

Communication Contingency Plan

City and County Governments as well as Public Safety Organizations must have reliable communications in order to function. In the event of catastrophic failure of any part of the radio infrastructure in Bryan County, a well thought out contingency plan for communications is necessary for continuity of government at all levels.

It is understood that the use of cellular phones as a means of backup communications cannot be relied upon. Time and time again, where there have been catastrophes, the cellular network has failed. This failure can be from circuit overloading due to heavy demand or damage to all or part of the cellular network equipment. Therefore, this plan will focus on using the existing radio infrastructure in Bryan County for backup communications in order to facilitate continuity of government.

- All dispatching for Public Safety except DPS come through the Bryan County Communications Center. The Bryan County Sheriff's Repeater is used for this purpose with the exception of Durant Police Department which has its own repeater and contingency plan.
- In the event of failure of the Bryan County Sheriff Repeater, The Bryan County Fire Repeater will be used for dispatching of Public Safety Agencies across Bryan County. The Fire Repeater is located miles away from the Sheriff's Repeater and the likelihood of both being damaged is small.
- Most Public Safety Agencies in Bryan County use simplex or car to car radio frequencies for their day to day operations. These frequencies will only be affected by Electromagnetic Pulse (EMP); therefore they do not require a backup.
- In the event that Bryan County Emergency Management Repeater is damaged, BCEM will use the state EM simplex frequency of 155.235 (STEMEOC) for internal communications.

Last Line or Fall Back Communications

The following should be used as the "last line" or "fall back" procedure when all else fails in the area of interoperability:

Co-location – Locating staff from all relevant agencies in a common area to receive and relay information face-to-face.

Runners – Using personnel to relay written messages (ICS Form 213) between agencies.

Joint Teams – Forming teams that include at least one member with a portable radio from every agency for which communications is required.

Emergency Telephone Communications

In the event of damage or congestion of land line phone lines and failure of the cellular network, city and county officials are to use the Government Emergency Telecommunications System (GETS) card to place priority telephone calls on land line phones. The GETS card gives priority to users and gives a 90% call completion rate with congested or even damaged telephone infrastructure.

In the event of total communications infrastructure damage, Bryan County Emergency Management will use High Frequency (HF) Radio to contact the Oklahoma State Emergency Operations Center on the Operation Secure frequencies using the call sign WNPV700. This network is monitored 24/7 at the state EOC.

ANNEX C
WARNING

I. PURPOSE.

This Annex establishes an effective alert and warning system within Bryan County capable of disseminating adequate and timely warning to the county officials and public in the event of threatened disaster.

II. SITUATION AND ASSUMPTIONS.

See Section II Basic Plan.

III. CONCEPT OF OPERATION.

General.

Bryan County will receive alerts or warnings from the Bryan County Communication Center Dispatcher (primary) or the Bryan County EM (secondary) upon proper notification through the National Attack Warning System (NAWAS).

A. Natural Hazards.

Normally, warning of the threat of severe weather such as tornadoes, severe thunderstorms, flash flooding etc. will be provided by the National Weather Service. They are disseminated by NAWAS, radio, TV, and Weather Service teletype.

B. Weather Warning Procedures.

Upon receipt of notification of approaching severe weather (i.e., tornadoes, thunderstorms, floods, etc.) from the National Weather Service, storm watch personnel, other communities in the county or any other official source, the Communications Center dispatcher will immediately notify the County and/or local EM Director who sound the warning devices, if required. If communications with the EM Director, or those designated as having warning responsibility in Appendix 3, cannot be established, police or fire personnel are authorized to sound the warning devices.

C. Technological Incidents/Hazards.

Warnings will be made for hazardous material incidents/accidents such as oil, chemical, or radiological material spills when the incident presents a hazard to the public. This warning will be announced on radio/TV and Reverse 911 to residents affected.

D. National Security.

1. Attack on this nation is a possibility at anytime and could be in any form; nuclear, biochemical, or conventional devices. It is likely that an attack would be preceded by a period of international tension that would provide ample time to inform

the public. However, should a surprise attack be launched, warning time may be as little as fifteen minutes. The possibility of an accidental missile launch also exists in which case warning time could approximate that of a surprise attack. NAWAS is the primary attack warning system used to provide initial warning down to the county level of government.

2. Upon receiving an alert/warning at the Bryan County Communications Center or from the Oklahoma Highway Patrol NAWAS, or alternate Warning Point, the Bryan County Sheriff or the Durant Police Department will immediately notify each community police department. Each Communication Center dispatcher will take action to **immediately activate** the warning signal. The police dispatcher will notify the EM Director. See Appendix 3 for each warning device activation procedures and Appendix 4 for the warning device locations.

3. The EM director upon notification of an attack warning will notify the Commissioners and other county/city officials as indicated in Appendix 3. These officials will make the decision on whether to activate the EOC and use it as the main control center during the emergency.

E. NAWAS and Attack Warning Signals.

1. Severe Weather or Other Peacetime Emergency.

The severe weather/other peacetime emergency warning is a 3 to 5 minute steady signal from warning devices, horns or other devices. In addition to other meanings or requirements for action, this can also be an ATTENTION or ALERT signal to turn on radios or TVs to listen for essential emergency information.

2. Attack Warning.

The attack warning signal is a 3- to 5-minute wavering tone on warning devices or a series of short blasts on horns or other devices. The attack warning signal shall mean that an actual attack or accidental missile launch against this country has been detected and that protective action should be taken immediately. THIS SIGNAL WILL BE USED FOR NO OTHER PURPOSE AND WILL HAVE NO OTHER MEANING.

IV. TASK ORGANIZATION AND RESPONSIBILITIES.

A. Task Assignments.

1. Policy Group(s).

a. Responsible for establishment and maintenance of a workable warning system throughout the county, cities and towns.

b. Make decisions on actions to be taken based on the seriousness of the warning received. Delegate this authority to the EM Director when such warnings require immediate decisions to protect life.

2. EM Director.

a. Coordinate warning information with the Policy Group, when time permits, and implement their decision on further dissemination of the warning.

b. Activate the EOC, with concurrence of the Policy Group, and call those persons designated to staff it.

c. Utilize the EAS and Cable TV circuit warning override to broadcast warnings to the public.

d. Educate the public on the meaning of warning signals.

3. County Sheriff or Durant Police Department.

After receiving the alert/warning (attack, weather, etc.), notify each community in Bryan County as shown in Appendix 1, this Annex.

4. Police Departments.

a. Upon receipt of warning information from the Highway Patrol Warning Point, or from other reliable sources, immediately notify the Sheriff's Department, and:

(1) Take action to sound the warning signal by notifying the person responsible for the warning device control point.

(2) Notify the Emergency Management Director or the designated alternate.

b. Provide mobile units to warn people in areas not covered by fixed warning devices using vehicle warning devices and bullhorns.

5. Fire Departments:

a. Where the Fire Dept. is designated as the warning device control point for the community, duty personnel are responsible for operating the warning devices.

b. Duty personnel will activate the warning devices when:

(1) An attack warning is received.

(2) When directed to do so by the EM Director or deputy EM Director.

(3) A serious hazard exists in the community and immediate warning is needed to protect life or property.

6. Bryan County Media Organizations.

a. The media are responsible for disseminating warning information from authorized sources, concerning potential emergency situations or actual disasters, to the public as rapidly as possible.

b. Activation of the Emergency Alert System (EAS) is the responsibility of the broadcast station having this EAS capability during periods of world tension.

c. The media will be requested to print/deliver and/or broadcast Emergency Management warnings and information, designed to provide necessary lifesaving guidance to the public during emergencies or disasters.

V. DIRECTION AND CONTROL.

A. General.

Warning systems may be activated from any level of government by agencies having responsibility to notify the public of imminent danger. At the local level these warnings are channeled through the EM Director, **if time permits,** in order to fix responsibility and ensure control of the warning process.

B. Warning Systems and Use.

1. National Warning System (NAWAS).

a. NAWAS is a protected, full time voice communication system interconnecting the National Warning Center and numerous warning points in each state. Oklahoma has one primary state warning point, two alternate state warning points and 30 secondary warning points. The primary point is at Oklahoma Highway Patrol headquarters in Oklahoma City. Alternates are located in the Oklahoma Department of Emergency Management EOC and the National Guard EOC. The 30 secondary points are located in OHP district headquarters, sheriff/police departments, fire departments and local EOCs throughout the state.

b. Warning information transmitted by the National Warning Center is received simultaneously at all warning points. The federal government is responsible for providing attack/accidental launch warning to state government.

State government is responsible for providing warning to all counties on a 24-hour basis. This responsibility has been assigned to Oklahoma Highway Patrol, with the Oklahoma Department of Emergency Management EOC and the National Guard EOC utilized as backup.

c. Warning within the county is the responsibility of county officials. The Oklahoma Highway Patrol Troop responsible for the area including Bryan County will notify the primary warning point in Bryan County which is the Communications Center, or the secondary warning point, the Durant Police Department, by radio or telephone, of attack or accidental launch warning, and of any dangerous or severe weather that may be approaching Bryan County.

d. Warnings received via NAWAS will then be relayed by the Communications Center dispatcher to other communities within the county as soon as possible after receipt of the warning. (See Appendix 1.)

2. National Weather Service (NWS).

Current weather information and watch/warnings are normally received over the NWS teletype circuit. However, NWS will issue weather warnings over the NAWAS line when time is of the essence. NWS will also broadcast weather and attack warning information over their weather broadcast radio network. The VHF weather radio transmitter stations at Sherman, TX (162.475 MHz) and Atoka, OK (162.500 MHz) may be monitored with special radios that only receive the continuous weather transmissions.

3. Emergency Alert System (EAS).

a. EAS provides emergency information to the public during time of high world tension and/or actual attack upon this country. These are protected stations that provide emergency radio and TV broadcasts on a volunteer basis. The system may be activated at the federal, state or local level. (Note: The Emergency Management Director may use the EAS to communicate with the citizens of the county by contacting station KLBC (FM) 106.3 in Durant. FEMA provides prerecorded tapes containing emergency information to be broadcast by EAS stations during an emergency.

b. Additional EAS broadcast stations in the Operational Area are listed in Appendix 1, Annex D.

4. Skywarn (Storm Spotters).

Skywarn is a national program designed to place personnel in the field to spot and track tornadoes. They are trained by NWS and instructed in what to report. Teams are made up of government employees and private citizens. During severe weather, storm spotters relay reports to their coordinator in the nearest EOC. Confirmed tornado sightings are relayed to the NWS that then disseminates appropriate warnings.

5. Warning devices.

Fixed warning devices are located throughout Bryan County and constitute the primary means of providing initial warning to the public of impending danger. See Appendix 4 this Annex for their locations. Supplemental warning device coverage will be provided by mobile units as required.

6. Newspaper Media.

When time is not critical, camera-ready copy has been prepared for specific emergencies to instruct the public which can be provided to the publishers for insertion into their papers.

VI. ADMINISTRATION AND LOGISTICS.

Warning System Testing and Maintenance.

A. Warning devices will be tested at least once a month.

B. Each community EM Director is responsible for the maintenance and repair of warning devices in each city/town.

VII. PLAN DEVELOPMENT AND MAINTENANCE.

Each community EM Director is responsible for updating this annex and its appendices on an as needed basis.

VIII. AUTHORITY AND REFERENCES.

References.

FEMA, Principles of Warning and Criteria Governing Eligibility for National Warning System Service, CPG 1-14, Washington D.C..

FEMA, National Warning System (NAWAS) Operations Manual, CPG 1-16, Washington D.C..

FEMA, Outdoor Warning System Guide, CPG 1-17, Washington D.C..

ANNEX C
WARNING

APPENDICES

APPENDIX 1 - Bryan County Warning Organizational Chart
APPENDIX 2 - Community Warning
APPENDIX 3 - Warning Device Decision SOP
APPENDIX 4 - Siren Locations within Bryan County
TAB A - Siren Location(s) Map of Durant
TAB B - Siren Location(s) Map of Bokchito
TAB C - Siren Location(s) Map of Caddo
TAB D - Siren Location(s) Map of Calera

BLANK PAGE

ANNEX C
WARNING

APPENDIX 1
BRYAN COUNTY WARNING ORGANIZATIONAL CHART

National Warning Center

State NAWAS Warning Point
(OK Hwy Patrol HQ)

Troop E – Highway Patrol – Durant (Primary)

County Warning Point
Bryan County Communications Center (Primary)
Durant Police (Secondary)

County Cities/Towns
Achille, Bennington, Bokchito, Caddo
Calera, Colbert, Durant

Unincorporated Communities

POLICY GROUP

Weather Service----Director of Operations----Storm Spotters

Emergency Operation Center

EOC Warning Officer	Fire/Rescue Service	Public Info/ Media	Law Enforcement
Local Officials	Mobile Units	Radio/EAS	Mobile Units
Schools/Hospital	Mobile	TV	Patrolmen
Nursing Homes		Newspapers	
Fixed Sirens			

BLANK PAGE

ANNEX C
WARNING

APPENDIX 2
COMMUNITY WARNING

Upon receipt of a Severe Weather, Hazardous Material Spill, Wildfire, Attack, or other Danger Warning, the following communities must be notified as soon as possible by the Bryan County Communications Center. The Bryan County Radio Communications Network is listed in Annex B.

All phones in Bryan County are AC 580:

	FIRE	**POLICE**	**AMBULANCE**
A. Achille	Page Out	283-3734	Page Out
B. Albany	Page Out	Page Out	Page Out
C. Armstrong	Page Out	Page Out	Page Out
D. Bennington	Page Out	Page Out	Page Out
E. Blue/Philadelphia	Page Out	Page Out	Page Out
F. Bokchito	Page Out	Page Out	Page Out
G. Caddo	Page Out	367-2046	Page Out
H. Calera	Page Out	434-7000	Page Out
I. Cartwright	Page Out	Page Out	Page Out
J. Colbert	Page Out	296-2700	Page Out
K. Durant	Page Out	924-3737	Page Out
L. Hendrix	Page Out	Page Out	Page Out
M. Kemp	Page Out	Page Out	Page Out
N. Kenefic	Page Out	Page Out	Page Out
O. Mead	Page Out	Page Out	Page Out
P. Roberta	Page Out	Page Out	Page Out
Q. Silo	Page Out	Page Out	Page Out

R. Wade	Page Out	Page Out	Page Out
S. Yuba	Page Out	Page Out	Page Out

* TELEPHONE NUMBER FOR THE COMMUNICATIONS CENTER: 924-3737 (OR 911)

BLANK PAGE

ANNEX C
WARNING

APPENDIX 3
WARNING DEVICE DECISION SOP
Bryan County, OK

I. SEVERE WEATHER, TORNADOES, HAZARDOUS MATERIALS, WILDFIRE.

A. Activating the warning devices will be done through the authority of the local Emergency Management Director, or his next in the chain of command.

B. The chain of command is as follows: **(NOTE:** Each Emergency Management Director that controls warning devices needs to enter applicable information here.)

James Dalton Office: 924-3661 Cell: 775-3661 Home: 924-4501
Kenneth Eppler Office: 924-3661 Cell: 920-5916
Roger Joines Office: 924-8459 Cell: 775-0361

C. If an incident occurs when the EOC is not manned or radio and telephone contact cannot be established in a relatively short period of time with one of the persons on the above list, then the police dispatcher has the authority to activate the storm warning devices.

D. All information received from the public, OHP, police, commercial radio stations, amateur radio, C.B. radio, weather instruments, or any other source should be passed on to Emergency Management Headquarters and verified before any action is taken. However, the tornado warning will be sounded at the earliest possible time when reports of imminent danger are received from any reliable source.

II. ATTACK.

When alert or warning message is received by the Communications Center dispatcher indicating an attack is about to occur, an immediate decision is required to initiate protective measures. The dispatcher must **IMMEDIATELY** sound the attack warning devices. Then the dispatcher should call the Emergency Management Director. However, if the Emergency Management Director is not available, the first person contacted in the following list will make the decision as to what further action (activate the EOC, etc.) to take:

Bryan County Sheriff Ken Golden 924-3000
Durant Police Chief 924-3737

* Unless otherwise specified all telephone numbers are area code 580.

BLANK PAGE

ANNEX C
WARNING

APPENDIX 4
SIREN LOCATIONS WITHIN
INCORPORATED PLACES OF BRYAN COUNTY

Durant Number of Sirens: 19
Activated from: Emergency Management or Communications Center
Activated how: Radio Controlled Emergency Management or Communications Center, or Manual Switch
Activated by (who): Emergency Management Director, Fire Chief, Police Chief
SOP for Decision to activate:(Primary EM Director, Alternate Fire Chief/Police Chief)

Achille Number of Sirens: One
Activated from: Durant EOC / Calera EOC (Backup) / Communications Center
Activated how: Radio Controlled or Manual Switch
Activated by: EM Director
SOP for Decision to activate: (Primary EM Director / Alternate: Communications Center

Bennington Number of Sirens: One (Inoperative at this time)
Activated from: Durant EOC / Calera EOC (Backup) / Communications Center
Activated how: Radio Controlled
Activated by: EM Director
SOP for Decision to activate: (Primary: EM Director / Alternate: Communication Center)

Bokchito Number of Sirens: One
Activated from: Durant EOC / Calera EOC (Backup) / Communications Center
Activated how: Radio Controlled or Manual Switch
Activated by: EM Director, Police Chief
SOP for Decision to activate: (Primary EM Director / Alternate: Police Chief)

Caddo Number of Sirens: Two
Activated from: Durant EOC / Calera EOC (Backup) / Communications Center
Activated how: Radio Controlled or Manual Switch
Activated by: EM Director or Police Chief
SOP for Decision to activate:(Primary: EM Director / Alternate: Police Chief)

Calera Number of Sirens: Two
Activated from: Durant EOC / Calera EOC (Backup) / Communications Center
Activated how: Radio Controlled or Manual Switch
Activated by: EM Director or Calera EM Director
SOP for Decision to activate:(Primary: EM Director / Alternate: Calera EM Director)

Colbert Number of Sirens: One
Activated from: Durant EOC / Calera EOC (Backup) / Communications Center
Activated how: Radio Controlled or Manual Switch
Activated by: EM Director or Police Chief
SOP for Decision to activate:(Primary: EM Director / Alternate: Police Chief)

ANNEX C
WARNING

Silo Number of Sirens: One
Activated from: Durant EOC / Calera EOC (Backup) / Communications Center
Activated how: Radio Controlled or Manual Switch
Activated by: EM Director or Fire Chief
SOP for Decision to activate: (Primary: EM Director / Alternate: Fire Chief)

Willow Springs (Mead/Lake Texoma) Number of Sirens: One
Activated from: Durant EOC / Calera EOC (Backup) / Communications Center
Activated how: Radio Controlled
Activated by: EM Director or Fire Chief
SOP for Decision to activate: (Primary: EM Director / Alternate: Fire Chief)

Note: Armstrong, Blue, Hendrix, and Kemp have no sirens.

BLANK PAGE

ANNEX C
WARNING

TAB A TO APPENDIX 4
SIREN LOCATIONS, MAP OF **ALPHA**, OK

BLANK PAGE

ANNEX D
EMERGENCY PUBLIC INFORMATION

I. PURPOSE.

This annex provides procedures for the effective collection, control, and dissemination of emergency public information. Long-term public educational efforts related to hazard awareness are also outlined in this annex.

II. CONCEPT OF OPERATIONS.

General.

A. Emergency information efforts will focus on specific event-related information. This information will generally be of an instructional nature focusing on such things as warning, evacuation, and shelter. It is also important to keep the public informed of the general progress of events. A special effort will be made to report positive information regarding emergency response in order to reassure the community that the situation is under control. Rumor control will be a major aspect of the informational effectiveness. Education efforts will be directed toward increasing public awareness about potential hazards and how people can deal with them. All information and education efforts will rely heavily on the cooperation of commercial media organizations.

B. See Public Information Operating Procedures Manual for "fill-in-the-blank" public news releases written as world tensions, weather phenomena, or other hazards/accidents which are in the process of occurring or have occurred.

C. The Public Information Officer should be knowledgeable of the National Incident Management System (NIMS), the Joint Information System (JIS) and the Joint Information Center (JIC) in order to properly interface with the State PIO, other jurisdiction PIO's and any federal PIO's.

III. TASK ORGANIZATION AND RESPONSIBILITIES.

A. Policy Group.

Appoint a public information officer or delegate the authority to appoint a PIO.

B. Public Information Officer (PIO).

1. Maintain public information operating procedures manual.

2. Direct all emergency public information efforts.

3. Designate a public information section within the EOC as the single official point of contact for the media during an emergency.

4. Provide news releases, which have been cleared for release by the proper authorities, for the media.

5. Check all print media for accuracy of reports.

6. Investigate rumors.

7. Check TV and radio broadcast for accuracy of reports.

8. Maintain a recent record of events.

IV. DIRECTION AND CONTROL.

The Public Information Officer is responsible for all education and information programs conducted by the policy group.

V. PLAN DEVELOPMENT AND MAINTENANCE.

The PIO will be responsible for the development and maintenance of education and information programs. Other persons or organizations specified in the annex will work with the PIO as necessary.

VI. AUTHORITIES AND REFERENCES.

References.

1. Christensen, Larry. Review of Mass Media Campaigns. Boulder, Colorado; Natural Research and Applications Information Center, University of Colorado.

2. Davenport, Sally S. and Penny Waterstone. Hazard Awareness Guidebook. Austin, Texas; Texas Coastal and Marine Council.

3. FEMA, State and Local Guide 100 (SLG 100); Guide for Increasing Local Government Civil Defense Readiness During Periods of International Crisis.

4. Regulska, Joanna. Public Awareness Programs for Natural Hazards, Boulder, Colorado, Natural Hazards Research and Applications Information Center, University of Colorado

Publications, Pamphlets, Leaflets

REFERENCE: FEMA 20 - PUBLICATIONS CATALOG, for others.

FEMA CPG 1-6 Disaster Operations Handbook for Local Governments.

FEMA CPG 2-18 State and Local Earthquake Hazards reduction; Implementation of FEMA Funding and Support.

Leaflet (L) 96 - Safety Tips for Winter Storms.

Leaflet (L) 111 - Safety Tips for Earthquakes.

APPENDICES

APPENDIX 1 - News Media Organizations
APPENDIX 2 - Media Access

BLANK PAGE

ANNEX D
EMERGENCY PUBLIC INFORMATION

APPENDIX 1
NEWS MEDIA ORGANIZATIONS

KEY EAS RADIO Broadcast Stations:

Durant Operational Area
KSEO (AM) KLBC (FM) 580-924-3100
1418 North 1st, Durant, OK

OKLAHOMA CITY - Operational Area

KMGL-FM	104.1	ORIG PRI RELAY STATION	405-478-5104
KLTE-FM	101.9	PRI RELAY	405-478-7000
WKY-AM	930 KHz	PRI CPCS-1	405-943-7993

KEY EAS TELEVISION Broadcast Stations:

Durant Operational Area: None

CABLE TV: VYVE, 120 Radio Road, Durant, OK, 580-924-2367

IS A SYSTEM FOR LOCAL TV OVERRIDE AVAILABLE? No

NEWSPAPERS:

Durant Daily Democrat: 580-924-4388
The Shopper: 580-924:1770
Denison Herald Democrat: 903-465-1400
Daily Oklahoman Agent: 580-924-4316

ANNEX D
EMERGENCY PUBLIC INFORMATION

APPENDIX 2
MEDIA ACCESS

I. PURPOSE.

The purpose of this appendix is to establish general policy for providing information to the public and equal access to certified representatives of legitimate news media during time of emergency.

II. CONCEPT OF OPERATIONS.

A. The following types of information shall be provided to the public by appropriate officials as soon as possible and in as much detail as possible.

1. Nature of disaster.

2. Location of disaster.

3. Time of disaster.

4. Number of casualties.

*5. Identification, age, sex, address of casualties.

*6. Nature and severity of injuries.

*7. Condition of casualties and where treated.

* **Only after notification of next of kin.**

8. Agencies involved in response.

9. Scope of agency involvement.

B. It is recognized that personnel involved in response to a disaster have certain responsibilities for the protection of life and property, and will be under varying degrees of mental and physical stress. It is also recognized that certified representatives of the news media should be provided every opportunity for equal access to the scene of a disaster response activity and to interview personnel when it is consistent with safety and effective operation.

III. COLLECTION AND DISSEMINATION OF INFORMATION.

The types of information outlined in II.A. above shall be collected and disseminated as soon as possible by the appropriate personnel as follows:

A. Incident Commander, or his designated representative, will provide a timely evaluation of the disaster to the Public Information Officer, to be followed, as appropriate, by additional details as they are available.

B. Public Information Officer will be responsible for collection of information from the Incident Command Post, hospitals, and other sources and agencies. He/she will is also responsible for the dissemination of information directly to the news media, for preparation of news releases, and, where appropriate, for making announcements directly to the public via radio and/or television hookups. Under no circumstances should the names of casualties be released before notification of next of kin by appropriate officials.

IV. ACCESS FOR NEWS MEDIA REPRESENTATIVES.

In recognition of the public's right to know as much information as possible about a disaster, the various agencies involved in response will make every effort to cooperate by allowing certified representatives of legitimate news media equal access in information and scenes of response activities as appropriate. News media representatives are likewise required to cooperate with agency personnel as directed for safety and efficient operation.

A. Incident Commander, or his designated representative, will allow such access as consistent with safety and efficient operation.

B. EOC Public Information Officer will establish rules for media access to the EOC as appropriate to conditions.

ANNEX E
EVACUATION

I. PURPOSE.

This annex was developed to provide orderly and coordinated evacuation procedures for evacuation within Bryan County for predictable hazard prone areas as well as those situations that cannot be anticipated. Additionally, this annex strives to identify, and organize supporting transportation services for necessary evacuations.

II. CONCEPT OF OPERATIONS.

A. General.

1. When local conditions warrant evacuation, the Emergency Management Director, after conferring with the Policy Group, Coordination Group and Floodplain Administrators (listed in Annex A, Appendix 2), will alert the Sheriff and Local Police Department to warn all residents within the endangered area of the need to evacuate. It is also necessary to establish a system for the acquisition and effective use of available transportation in Bryan County during disasters.

2. If a dam breach is imminent or occurring at any of the dams in or affecting Bryan County, the Dam Tenders will notify the Communications Center dispatcher by the quickest means available. The dispatcher will notify the County Sheriff's office and all police departments and fire departments in the affected areas so that appropriate actions may be taken to protect lives and property. Additionally, the Dam Tenders will notify Lake Rangers to warn boaters, boating facilities, and the affected city officials.

B. Considerations.

1. There are several factors that must be considered when planning for evacuation. First among these are the characteristics of the hazard itself; magnitude, intensity and duration. These factors determine the number of people to be evacuated and available time. Another consideration is the availability of evacuation routes, their capacity, and vulnerability to the hazard.

2. If communities within Bryan County, or adjacent counties, are affected by a major disaster, it is possible that other communities in the county may be used as a reception area to provide food and lodging to those evacuated. See Appendices to Annex F for a list of emergency shelters that may be used to shelter evacuees.

III. TASK ORGANIZATION AND RESPONSIBILITIES.

Task Assignments.

1. Coordination Group.

a. After coordinating with the Policy Group, the Floodplain Administrators and the EM Director, decide which areas of the county need to be evacuated and advise the Emergency Manager.

b. Advise Red Cross director of the need for shelters and coordinated use of pre-designated shelters.

c. Issue evacuation order through emergency service personnel, and the media.

d. Make press release to the media of the evacuation, area to be evacuated, and shelter(s) to be activated.

e. Coordinate evacuation with other jurisdictions as required.

f. Establish a Disaster Recovery Center as needed.

g. Provide transportation and other resources required to aid evacuation.

h. Request needed assistance from Oklahoma Department of Emergency Management.

2. Transportation Coordinator.

a. Responsible for identifying and assigning emergency transportation to the requesting organizations, or emergency services coordinators, and dispatching these vehicles to work sites or staging areas to provide the emergency transportation as requested.

b. Schedule and manage the use of vehicles provided from all sources along with a qualified driver for the equipment.

c. Establish/coordinate pickup points in the area and advise the emergency management director, sheriff's department, and the PIO who will notify the public.

d. Assist the Emergency Management Director in planning the scheduled evacuation of hospitals and nursing homes in the event of hazards or other threats to these institutions.

e. Assist the Resources Coordinator in the development and maintenance of a current vehicle inventory within the Bryan County Resource Management Manual.

f. Task the Resources Coordinator with vehicle and driver requirements during any emergency.

g. Provide maintenance service and fuel to all equipment used to support emergency operations.

h. Keep records of equipment use, man-hours, and associated costs. Provide this data to the Resource Coordinator during and after the disaster.

3. Resources Coordinator.

a. Ensure that all necessary mutual aid agreements (preferably written) are in place for the acquisition of emergency transportation.

b. Maintain an updated inventory of public and private vehicles for use by the Transportation Coordinator or other EOC staff to meet emergency needs.

c. Coordinate vehicle availability for emergency use with government departments and develops other sources of transportation which could be made available from the following agencies/sources:

(1) United States Post Office.

(2) Church buses.

(3) Oklahoma National Guard.

(4) School districts.

(5) Business and commercial sources.

d. Recruit qualified volunteers to drive and load vehicles when the organization providing the equipment is unable to furnish operators.

4. Superintendents of Schools.

Develop a written mutual aid agreement with the Resource Coordinator that can be utilized for emergency transportation of people and/or supplies and provide the maximum number of school buses as requested.

5. County/State/Federal Departments & Agencies.

Provide, as requested by the Resources Coordinator, and as available, the type and number of vehicles needed to meet emergency requirements. Equipment committed to disaster/emergency response as part of the department's responsibility will not be subject to redirection unless the EOC Chief of Operations directs they be diverted to higher priority use.

6. Local Churches and Business Firms.

Provide to the Resource Coordinator, where possible, transportation assets needed for movement of people or supplies in disaster or emergency situations.

IV. DIRECTION AND CONTROL.

A. Flooding, Fire or Other Threat.

The chief elected official in the jurisdiction is the overall authority for evacuation efforts. All activities will be coordinated in the activated EOC or the incident site command post.

B. Hazardous Materials or Transportation Accidents.

When such an event occurs which may require evacuation, the Emergency Management Director will be notified and the EOC opened to ensure necessary services can be activated. Due to the specialized nature of hazardous materials response, a contingency plan has been developed and included in Annex Q.

VI. PLAN DEVELOPMENT AND MAINTENANCE.

Responsibility for updating and revising this Annex rests with the County EM Director and the Transportation Coordinator in coordination with the Resources Coordinator. Support in this effort by all participating departments and agencies are required.

VII. AUTHORITIES AND REFERENCES.

A. Federal Insurance Administration (FIA), FIA-2, Questions and Answers on the Flood Insurance Program.

B. FIA-13, Flood Emergency and Residential Repair Handbook.

C. References:

1. A Guide for Emergency Highway Traffic Regulation, FHWA-SA-88-023, US Department of Transportation, Federal Highway Administration, Office of Traffic Operations.

2. Glossary of Terms and Abbreviations, Transportation Preparedness Planning, DOT P 1945.1C; US Department of Transportation, Research and Special Programs Administration, Office of Emergency Transportation, Washington, DC 20590.

3. Department of Transportation, Crisis Action Plan, Order 1900.7D; US Department of Transportation, Office of the Secretary of Transportation.

4. US Department of Transportation, Region VI, Plan for Civil Transportation in a Defense Emergency, DOT RETCO VI Order 1900 1C.

5. CPG 2-15 Transportation Planning Guidelines for the Evacuation of Large Populations.

BLANK PAGE

ANNEX F
HUMAN RESOURCES

I. PURPOSE.

This annex provides Bryan County, including its municipalities, with information on how to plan for emergency public assistance during a disaster situation. Public "Welfare Services" during times of disaster are designed to meet immediate needs of people during and after the disaster occurrence. Also this annex is concerned with providing shelter and care, from both public and private sources, to the local population and displaced persons in case of tornadoes, floods, winter storms, nuclear incidents, or other hazardous situations.

II. CONCEPT OF OPERATIONS.

General.

A. Primary responsibility for welfare services to disaster victims is assigned to the Bryan County Chapter of the American Red Cross (ARC). Welfare services will be provided through the coordinated efforts of the ARC, Department of Human Services (DHS) County Office, and other volunteer groups. This concept envisions emergency registration, congregate care, clothing distribution, and other assistance to be decentralized into the community requiring support insofar as possible or from adjacent communities if damage precludes operating in the disaster area.

B. Reliance cannot be placed entirely on any single means for individual protection or shelters. A balanced combination of several methods must be utilized in a comprehensive shelter program. Normally, shelter will be assigned or utilized as follows: Public Schools, Churches, Government Buildings, Colleges/ Universities, and Private Buildings. See local phone books for names, addresses and phone numbers for coordination purposes.

C. In the event it becomes necessary to occupy emergency shelters the primary mode of transportation will be walking, supplemented by private vehicle. Transportation from staging area(s) to designated shelters, if needed, will be provided by the Resource Coordinator.

D. The following criteria is recommended to be used when selecting buildings/shelters for public use.

1. For tornado shelter, use basements of concrete construction that have a minimum number of windows.

2. For flood/storm shelter, consider elevation, surrounding topography and structural integrity.

2. For chemical and biological shelter, consider the location of the hazard, the wind direction, the hazard duration, as well as the ability to "seal off" the structure from the outside hazard combined with the structure's internal ventilation system's capability to operate over long periods of time.

3.

III. ORGANIZATION AND ASSIGNMENT OF RESPONSIBILITIES.

Assignment of Responsibilities.

1. Policy Group.

a. Development of a complete shelter program. This includes an in-place plan for sheltering local residents and emergency shelter plan for displaced persons in the event of natural disaster or technological accident.

b. Shelter activities such as:

(1) Activating reception centers for registration, lodging, feeding and sheltering of the local population.

(2) Shelter surveys.

(3) Marking of shelters.

(4) Training of shelter managers.

(5) Providing shelter management kits and certain supplies.

(6) Providing public information and education.

(7) Activating and deactivating shelters as needed.

(8) Providing communications capabilities.

2. County ARC Executive.

a. Identify buildings suitable for use as lodging/shelters and make arrangements for their use in emergency.

b. Ensure all lodging/shelters have appropriate staffing to provide necessary services, including care of unaccompanied children, the aged, and others needing special care.

c. Supply shelters with water, food, bedding, clothing, and other supplies as required.

d. Refer person(s) in need of medical care to appropriate facilities; obtain transportation if required.

e. Register all persons in shelters or Registration Centers.

f. Coordinate activities with state and federal agencies as necessary, request assistance from the State of Oklahoma Department of Emergency Management Emergency Operations Center (EOC) when local resources are depleted.

g. Maintain communications with other emergency service organizations and operating emergency management EOCs.

h. Provide volunteers adequate training for emergency operations.

i. Coordinate welfare service planning with Shelter Managers and EOC Shelter/Mass Care Officers.

j. Assist in shelter management and control.

k. Identify facilities to be used for mass feeding.

l. Notify participating agencies of mass feeding locations, when operational.

m. Establish procedures to receipt and account for supplies procured.

n. Keep all emergency management EOCs informed of welfare service activities.

o. See Annex A for Disaster Contact for Bryan County American Red Cross.

3. Shelter/Mass Care Coordinator.

a. In coordination with the American Red Cross Executive (coordinator may be the ARC executive), the DHS County Director, and/or the Salvation Army Representative, is responsible for organizing, establishing, directing and monitoring the reception activities for processing the local population prior to and during a crisis.

b. Organize and operate lodging and feeding facilities.

c. Supervise operations of emergency shelters, when necessary.

d. Assist American Red Cross in operating emergency shelters in the event of natural disasters or nuclear incidents requiring evacuation of homes.

e. Coordinate requirements for volunteers, supplies, materials and financial assistance with Resource Coordinator, ARC and the DHS County Director.

f. Assist the ARC Chapter Executive in developing emergency welfare plans for his community.

g. Identify facilities for lodging/shelter and mass feeding within his community.

h. Coordinate emergency welfare activities with ongoing emergency operations and the EOC staff.

4. Superintendent(s) of Schools.

Ensure contracts or memorandums of agreement are prepared with county representatives for the use of buses for transport of evacuees as requested by the Transportation Officer. (See Annex A, Appendix 2 for names and phone numbers of superintendents in the county.)

5. County DHS Director.

a. Assist in reception and registration of relocatees/displaced persons, within capabilities.

b. Assist ARC in staffing and operation of temporary shelters/congregate care facilities in the event of natural disaster or other emergencies requiring evacuation.

c. Provide individual assistance.

d. Purchase clothing for disaster victims when authorized.

e. Provide financial assistance when needed and authorized.

6. Salvation Army.

The Salvation Army is a key, independent agency in the county and should be utilized when mass care services are required. County representatives should make full use of their capabilities and experience.

a. Support shelter operations.

b. Collect and distribute in-kind donations.

c. Provide direct aid to disaster victims through case management programs.

d. Provide liaison to the county EOC.

e. Organize and provide food services through fixed sites and mobile units.

f. Support disaster communications via amateur radio.

7. Oklahoma Volunteer Disaster Response Organizations can respond with:

a. Food.

b. Clothing.

c. Shelter.

d. Equipment and goods.

e. Communications.

f. Cleanup and reconstruction assistance.

g. Damage assessment assistance.

h. Transportation.

i. Notification.

j. Counseling.

k. Follow-up care after the emergency.

l. Advocacy for victims. (To assure that existing services and help are available to all who need them and qualify.)

IV. DIRECTION AND CONTROL.

Emergency Shelters.

Local residents will be sheltered as directed by county officials.

V. ADMINISTRATION AND LOGISTICS.

A. Shelter Management.

Shelters will be operated in accordance with the standard American Red Cross procedures.

B. Communications.

The primary communications link between shelters and the EOC will be by telephone. In the event telephones are inoperative or overloaded, law enforcement personnel assigned to each shelter will provide radio communication using portable radios. Where possible, amateur radio operators could provide additional radio support.

VIII. PLAN DEVELOPMENT AND MAINTENANCE.

The Emergency Management Director and Shelter Coordinator are responsible for maintaining and updating this Annex. They must closely coordinate changes with the American Red Cross Chapter Executive serving Bryan County and the Bryan County DHS Director.

IX. AUTHORITIES AND REFERENCES.

References.

FEMA, Guidance for Development of an Emer. Shelter Stocking Plan, CPG 1-19.

FEMA, Sheltering and Care Operations, CPG 2-8.

FEMA, Guide for Increasing Local Government Civil Defense Readiness During Periods of International Crisis; State and Local Guide (SLG) 100. Section 6 is Illustrations of Shelter Upgrading Techniques. Section 13 is Actions to Increase Inventory of Public Shelter. Section 17 is Actions to Increase Operations Readiness of Public Shelter.

FEMA, Shelter Supplies, CPC 83-1.

FEMA, Architectural Design Techniques for Emergency Protection and Energy Conservation, TR 86.

FEMA, How to Manage Congregate Lodging Facilities and Emergency Shelters, SM-11.

FEMA, Shelter System Officer Course, SM-355.

FEMA, Shelter Management Handbook, FEMA-59.

ANNEX F
HUMAN RESOURCES

APPENDICES

Appendix 1 - Tornado/Severe Weather Shelters
Tab A – Bryan County Shelters
Appendix 3 – Okla. Volunteer Disaster Response Organizations Communication Chain (VOAD)

ANNEX F
HUMAN RESOURCES

APPENDIX 1
TORNADO/SEVERE WEATHER SHELTERS

GENERAL.

Since a function of the Emergency Management Director is to maintain a list of tornado shelters, evaluate new construction for suitability and answer questions from the public concerning tornado shelters, the following criteria are listed for tornado shelters:

A. Only space located in fully or partially below-grade basements or subbasement must be concrete.

B. Two types of potential tornado space are distinguished.

1. Primary: The basement must be fully buried, and the floor over the basement must be concrete.

2. Secondary: The basement may be either:

(a) Fully buried but with a wood floor over the basement, or

(b) Partially buried with a concrete floor over the basement but with no more than approximately 25% of the wall height exposed at any point other than at occasional stairwells, window wells, or area ways. No above ground wall may be of wood or metal stud construction.

(c) In secondary tornado shelter basements, areas not shielded from exterior windows by interior walls will not be considered as shelter space.

C. The number of shelter spaces can be calculated from the useable floor area divided by six square feet per person.

D. Citizens should be advised to plan for and prepare emergency shelters in or near the home. Local government facilities should not be relied upon for shelter because of liability issues and the difficulty of obtaining access after normal business hours. Many private shelters exist throughout the county.

BLANK PAGE

ANNEX F
HUMAN RESOURCES

TAB A TO APPENDIX 1
TORNADO/SEVERE WEATHER SHELTERS
BRYAN COUNTY

DURANT:

1. SOSU, Morrison Hall, SOSU Campus
2. Carl Albert Park, Gail Farrell Drive & N. Washington

ACHILLE: NONE

BENNINGTON: Bennington School Saferoom

BOKCHITO: Rock Creek H.S. Saferoom

Blue: Rock Creek Elementary Saferoom

CADDO: NONE

CALERA: Calera School Saferoom

COLBERT: Colbert School Saferoom

MEAD: NONE

SILO: Silo School Saferoom

BLANK PAGE

APPENDIX 2
OKLAHOMA VOLUNTEER DISASTER RESPONSE ORGANIZATIONS COMMUNICATION CHAIN
VOLUNTARY ORGANIZATIONS ACTIVE IN DISASTERS (VOAD)

CONTACT: Michelle Jaggers, OEM
P.O. Box 53365
Oklahoma City, OK 73152-3365

Phone: (405) 521-2481
FAX: (405) 521-4053
(24 hr): (800) 800-2481

MEMBER ORGANIZATIONS AND THEIR SERVICES:

Adventist Community Services Provides Emergency feeding, clothing, bedding, counseling, child care and manages center to handle Donated Goods.

American Radio Relay League Provides Emergency Communications.

American Red Cross Provides feeding stations, mass or individual shelter, first aid, supplementary medical care and comfort kits.

Baptist General Convention of OK Provides Mobile/Mass Feeding, Child Care and communications services to disaster victims.

Catholic Disaster Relief Provides monetary help to disaster victims.

Christian Church (Disciples of Christ) Provides monetary help to disaster victims.

Church of Jesus Christ of Latter Day Saints Provides volunteers to help disaster victims.

Church of the Brethren Provides cleanup and rebuilding services.

Episcopalian Church Provides monetary help to disaster victims.

OK Mennonite Disaster Services Provides cleanup and rebuilding services to disaster victims.

OK Conference of Churches Provides monetary help to disaster victims.

OK REACT Teams Provides communications, crowd and traffic control.

Presbyterian Church Provides Organization and Funding Services to disaster victims.

The Salvation Army Provides Spiritual Counseling, Registration, Medical Assistance, Temporary Shelter, Mobile and Mass feeding, Bedding and communications.

United Methodist Church Provides Spiritual & Emotional Counseling and Cash Grants to disaster victims.

ANNEX H
HEALTH AND MEDICAL

I. PURPOSE.

This annex establishes effective, workable procedures that will provide emergency health and medical services to the people of Bryan County during and after a natural or manmade disaster.

II. CONCEPT OF OPERATIONS.

General.

A. Emergency medical and public health service will be an extension of normal duties. The magnitude of health/medical care will be adjusted to the size and type of disaster ranging from response to an isolated outbreak/crisis to numerous outbreaks of diseases that potentially threaten the health of the entire citizenship of the County.

B. Primary concerns of medical and public health officials include monitoring and evaluation of disease outbreaks as well as containment and treatment. This may range from the identification, isolation, and treatment of a small number of specific individuals in the county to evaluation, inoculation and treatment of the entire citizenship of the County. This may also involve –assisting other agencies with maintaining a source of pure water, and coordination of waste-water disposal under disaster conditions.

C. In mass casualty situations, funeral home directors and mental health professionals can be extremely useful for counseling victims of a disaster as well as the personnel conducting the response and recovery operations.

D. The acute care medical system/officials will assume responsibility for "treatment of the ill" including transportation, hospital based evaluation, isolation, treatment, triage and, as appropriate, the development of a temporary morgue.

E. The public health system/officials will coordinate responsibility for "treatment of the well" including the capture of the local pharmaceutical assets, request and distribution of both the regional and national pharmaceutical stockpiles, inoculation of first responders and establishment of a distribution plan for treating the public in those instances where evaluation, inoculation and treatment of a large segment of the citizenship is required.

III. TASK ORGANIZATION AND RESPONSIBILITIES.

A. Organization.

1. The Bryan County emergency health and medical organizational structure will remain as it currently exists. Each medical organization will operate as part of the county wide organization, rendering and receiving support and assistance in accordance with existing mutual aid agreements. The Bryan County Health & Medical Coordinator shall be the County Health Department Administrator unless another designee has been appointed by the Commissioner of Health will act to coordinate the actions of medical personnel/facilities with each other and with other sources of medical aid.

2. Supporting Organizations.

a. County Health Department.

b. Area hospital

c. Medical clinics.

d. Medical, dental, veterinarian, nursing and medical technical personnel residing in the county.

e. Pharmacies.

f. Nursing homes.

g. Funeral homes.

h. Red Cross personnel and other volunteer resources.

i. State agencies as required.

j. Emergency Medical Service (EMS) providers, both ground and air systems.

k. Medical Emergency Response Center (MERC) in those counties served by a MERC.

l.. Companies which own and service Portable Toilets.

B. Task Assignment and Responsibilities.

1. The local hospital system is responsible for treating the ill.

2. In instances where ongoing monitoring and surveillance reveal that a threat to the medical health of a large segment of the jurisdiction exists, the County Health Coordinator assumes responsibility for reporting that threat to county, state and federal officials and securing the necessary pharmaceutical resources for responding to that threat. This includes:

b. Capturing and securing the local pharmaceutical stockpile from local pharmacies throughout the county.

c. Requesting the delivery of regional and national pharmaceutical stockpiles.

d. Developing plans through the Emergency Operations Center to receive, apportion, and distribute regional and national assets and maintain them in a secure facility.

e. Providing manpower, pharmacological expertise and instructions for re-packaging regional and national assets in dispensable units consistent with need.

f. Developing plans in cooperation with the Emergency Operations Center for delivery of re-packaged medications to select sites in appropriate quantities.

2. In instances where treatment of a large segment of the citizenship appears warranted, the County Health Coordinator assumes responsibility for developing and implementing a plan to inoculate all first responders and their families. This includes:

a. Obtaining from the Emergency Operations Center a list of first responders and arranging for them to receive mass medication, for the responder and the responder's immediate family prior to commencing mass medication of the general public.

b. Developing an identification system for first responders to control future access.

c. Providing needed medication and instruction for treatment of the first responders family

d. Developing a staffing plan for treating the public and, in cooperation with the Emergency Operations Center, issuing identification credentials and assigning first responders to their duty station upon receipt of treatment.

3. Medical and public health officials work collaboratively with the Emergency Management Director, Law Enforcement, Fire and Rescue, Red Cross, County Maintenance, and the Emergency Operations Center to:

a. Establish central points of distribution (POD's) for deployment of medication to individuals in targeted locations in the containment area.

b. Solicit, recruit, and staff each of the distribution sites with the following personnel.

i. Physicians, Pharmacists,
ii. Nurses,
iii. Mental health professionals,
iv. Interpreters,

v. Fire & Rescue,
vi. Law Enforcement/ Security,
vii. Red Cross, and
viii. Support personnel.

a. Arrange for delivery of appropriate pharmaceutical resources to each POD and insure appropriate security of those resources.

b. Arrange for transportation of identified or symptomatic individuals identified at each POD to the hospital triage unit via appropriate carrier (ground transport, air-evacuation)

c. Provide for rotation of staff on a 12-hour basis.

4. Public Health Officials also assume responsibility to identify and arrange for distribution of medications to medical personnel responsible for captive populations in the containment area including, but not limited to:

a. All nursing home staff and clients.

b. All clients and staff housed the Department of Corrections.

c. All clients and staff housed in mental health treatment centers.

5. Public Health Officials also assume responsibility for identifying and treating captive populations that have no attendant medical personnel including:

a. Individuals in residence in senior citizen housing projects.

b. Individuals in residence at the (jail, college, treatment centers).

c. Handicapped, aged and otherwise homebound individuals as identified by local agencies and organizations.

d. Individuals in attendance at known special events that may be in progress such as sporting events, charities, reunions, auctions, etc.

6. Medical, hospital and public health officials then work collaboratively with the Emergency Management Director, Law Enforcement and the Emergency Operations Center to:

a. Solicit, recruit and staff mobile treatment teams to distribute and supervise the dispensing of medication to captive populations without attendant medical personnel.

b. Develop Mobile Treatment Teams (Strike Teams) to include appropriate

personnel, both medical (pharmacists, nurses, physicians, etc.) and non-medical (security, transportation and support), if available.

7. Medical and public health officials work cooperatively with the Emergency Operations Center to develop a plan to inform and subsequently educate the public with regard to the threat, planned course of action and appropriate community response to the crisis via radio broadcasts, leaflets, Cable TV and informational pamphlets.

a. Developing agreements and cooperation between:

(1) County medical society, nursing association and other professional groups.

(2) All hospitals, clinics, and other medical related facilities.

(3) Red Cross and other related organizations.

b. Planning and coordination of emergency medical services to generally include:

(1) Monitoring and surveillance for disease outbreaks

(2) Notification of the County Emergency Management Director in the event of a disease outbreak.

(3) Securing needed pharmaceutical resources as well as the necessary medical manpower and facilities to respond adequately to the threat posed by a particular disease or health hazard.

(4) Procuring needed medical resources until the threat has been abated.

c. Facilitate planning and coordination of emergency medical services in cooperation with the acute care medical system in the County to include:

(1) Care of sick and injured.

(2) Sorting and evacuation of mass casualties.

(3) Patient transfer between facilities and their transportation.

(4) Provision of medical, transportation, and other related support to handicapped and elderly persons during emergencies.

(5) Request the assignment of additional medical professionals to

shelters, as established by the Emergency Management Director or other entity responsible for the shelters.

Plan and supervise ancillary health services to include:

(1) Inspection of food and water supplies.

(2) Insect and rodent control and other health measures to reduce the threat of disease.

(3) Mass medication programs, when required.

(4) Environmental health services as needed.

IV. DIRECTION AND CONTROL.

The Bryan County Health Coordinator is responsible for the direction and control of all public health activities. Within each community, the Health and Medical Coordinator will coordinate all public health activities and assist those in the private sector.

V. CONTINUITY OF GOVERNMENT.

A. Lines of Succession.

The order of succession will be in accordance with local Standing Operating Procedures (SOPs).

B. Indispensable Operating Records.

Each involved agency will be responsible for determining and maintaining the records which are essential for post disaster assignment.

VI. ADMINISTRATION AND LOGISTICS.

A. Health Statistics.

1. Vital Statistics. The Health Department will continue to collect vital statistics as under normal operating procedures.

2. Disease Statistics. Data related to disease out-break will be collected and

forwarded to appropriate state and federal officials.

B. Testing and Inspections.

All testing of materials or substances will be accomplished under normal procedures used by the County Health Department or the Department of Environmental Quality. Inspections will be conducted in normal fashion but with increased frequency.

VII. PLAN DEVELOPMENT AND MAINTENANCE.

The County Health Department will coordinate with the Emergency Management Directors, regional medical planning groups, local hospitals, medical personnel and other agencies specified in this annex for this plan's development and maintenance.

VIII. AUTHORITIES AND REFERENCES.

References.

1. FEMA SLG 100, Guide for Increasing Local Government Civil Defense Readiness During Periods of International Crisis.

2. FEMA, CPG 1-6, Disaster Operations - A Handbook for Local Governments.

IX. IMPLEMENTATION.

This annex will be implemented upon occurrence of a local disaster at which time a declaration of emergency may be made by county authorities.

APPENDICES

Appendix 1 - Hospitals/Long-Term Care Facilities/Nursing Homes
Appendix 2 - Sources of Health and Medical Assistance

BLANK PAGE

ANNEX H
HEALTH AND MEDICAL

APPENDIX 1
HOSPITALS\LONG TERM CARE\NURSING HOMES

1. Hospital, General Medical-Surgical:

   a. Hospital: AllianceHealth Durant
      Address: 1800 West University, Durant, OK 74701
      Phone: 924-3080
      Capacity: 103 Beds

2. Long-Term Care Facilities\Nursing Homes

   a. Home: Four Seasons Nursing Home
      Address: 1212 Four Seasons Drive, Durant, OK
      Phone: 924-5300

   b. Home: Oak Ridge Manor Nursing Home
      Address: 1100 Oak Ridge Drive, Durant, OK
      Phone: 924-3244

   c. Home: King's Daughters & Sons Nursing Home
      Address: 1223 Baltimore, Durant, OK
      Phone: 924-0496

   d. Home: Calera Manor Nursing Home
      Address: Hwy 69/75, Calera, OK
      Phone: 434-5727

   e. Home: Southern Point Living Center
      Address: 101 Sherrard Drive, Colbert, OK
      Phone: 296-4500

* Unless otherwise specified all telephone numbers are area code 580.

BLANK PAGE

ANNEX H
HEALTH AND MEDICAL

APPENDIX 2
BRYAN COUNTY SOURCES OF HEALTH AND MEDICAL ASSISTANCE

I. Additional sources of assistance and support.

A. County Health Department - See Appendix 2 to Annex A.

B. Ambulance Service:
Category of Service provided is EMT Basic Life Support.

Bryan County EMS, 306 S. 22nd , Durant, OK
Phone: Emergency 911 Bus 580-924-4687
Medical Freq 155.340

OTHER AMBULANCE SERVICE

M.A.S.T. Helicopter, Fort Sill, OK
Phone: Emergency 442-4224 Bus 442-2815
Medical Freq 155.340

Mediflight 800-522-0212

Careflight: 817-332-5068

Eagle Med: 800-525-5220
800-764-3343

AirEvac: 800-247-3822

C. Laboratories:
Alliance Health Durant, 1800 W. University,
Durant, OK Phone: 924-3080

D. End Stage Renal Disease Facilities:

DaVita - Durant, 411 Westside Drive,
Durant, OK Phone: 580-920-0808

E. Home Health Agencies:

Red River Home Health, 317 W. Main,
Durant, OK Phone: 920-2088

Health Back Home Health, 1028 Criswell Blvd, Suite 104
Durant, OK Phone: 920-1285

Aspire Home Care, 1028 Criswell Blvd, Ste 108
Durant, OK Phone: 931-6821 855-527-7473

Mayes Home Health, 701 North Washington,
Durant, OK Phone: 924-4010 888-798-6888

Oklahoma Healthcare Solutions, 1323 N. 16th Ave
Durant, OK Phone: 931-3055

Victory Home Health, 2814 N. 1st Ave,
Durant, OK Phone: 931-3707 888-815-7922

F. Listings are in local telephone directories for:

Physicians Physical Therapists
Dentists Chiropractic Physicians
Optometrists Veterinarians
Pharmacies Funeral Directors/Homes
Counselors

d. Ambulatory Surgical Centers in Bryan County:

Alliance Health Durant, 1800 W. University Blvd 924-3080

ANNEX I
LAW ENFORCEMENT

I. PURPOSE.

This annex identifies law enforcement responsibilities, coordination requirements, and management procedures for the protection of life and property during emergencies to include crisis relocation operations.

All on-scene management of an incident will be in accordance with the **Incident Management System (ICS)**. The first responder on-scene will assume the Incident Commander's responsibilities, contain the incident and establish the Incident Command Post.

II. CONCEPT OF OPERATIONS.

General.

The Sheriff's Department will generally be able to provide adequate police control through existing mutual aid agreements. Emergency operations for law enforcement personnel are simply an expansion of their normal daily responsibilities. They include maintenance of law and order, traffic, and crowd control.

III. TASK ORGANIZATION AND RESPONSIBILITIES.

Task Assignments and Responsibilities.

1. County Sheriff's Dept.

   a. Coordinate all law enforcement in the county.

   b. Disseminate warnings throughout the county.

   c. Coordinate relocation traffic control.

   d. Coordinate mutual aid agreements.

   e. Support emergency public safety activities.

   f. Provide for the security, protection, and relocation of inmates in the County Jail.

2. City/Town Police Departments.

   a. Maintain law and order.

   b. Monitor communications for warnings.

   c. Initiate warning system in the city/town.

d. Assist Sheriff by disseminating warnings to other communities.

e. Provide mobile units for warning & evacuation.

f. Provide security for key facilities to include; financial institutions, markets and one-stop facilities, pharmacies, hospitals (animal hospitals included), liquor stores and taverns, gun and hardware stores.

g. Provide traffic control during shelter operations or other emergencies.

h. Provide crowd control as required.

i. Provide police officers to larger shelters for law enforcement and communications.

j. Mark expedient emergency shelters.

k. Provide warning to affected areas when localized flood conditions exists.

l. Establish mutual aid agreements with cities and towns that are able to assist.

m. Provide for the security, protection, and relocation of jail inmates.

IV. DIRECTION AND CONTROL.

The County Sheriff is responsible for coordinating all law enforcement activities within the applicable jurisdiction. Mutual aid or other police support will function under the direction of their own director/chief while operating in the county. Law enforcement emergency operations will be directed from the EOC by the Sheriff or his/her representative. Routine operations will be in accordance with standard operating procedures. State and federal support may be called upon after all local police capability and mutual aid support has been exhausted.

V. ADMINISTRATION AND LOGISTICS.

A. Passes.

1. Experience has proven that there are instances where special passes are needed in a disaster area to control access to those with legitimate reasons for being in the area. Only under extraordinary circumstances will passes be required after a disaster. The decision to require passes will rest with the Policy Group and direction for use of passes will be given through the EOC. Police personnel will issue passes, or direct those seeking admittance to the Police Department to obtain them. Common sense and discretion must be used in issuing/not issuing passes as over enforcement can severely

hamper relief efforts as much as under enforcement. Sample temporary passes and permanent passes are shown in Appendix 1.

2. The following vehicles and their occupants are exempt from pass requirements: marked utility company vehicles, military, city/state government vehicles, county vehicles, and relief agencies (Red Cross, Salvation Army, etc.) vehicles. Many emergency passes are already in existence (press cards and medical personnel identification) and they will be honored unless a reasonable question arises as to their authenticity. If such questions arise, the party should be directed to the Police Department for consideration of a temporary pass.

B. Communications.

Law Enforcement communications network information is contained in Annex B. The Sheriff will operate a base station in the EOC communication center during an emergency.

C. Resources.

A listing of available law enforcement resources are listed in Appendix 2.

D. Key Facilities.

A list of facilities which may require police protection or increased security, dependent upon the situation, should be maintained by the Sheriff's Office.

VI.PLAN DEVELOPMENT AND MAINTENANCE.

The Sheriff's Office will continue the planning of all law enforcement operations related to emergency management within the county. A review and update of this Annex will be conducted annually by each law enforcement agency.

VII. AUTHORITY AND REFERENCES.

References.

FEMA, State and Local Guide 100 (SLG 100); Guide for Increasing Local Government Civil Defense Readiness During Periods of International Crisis.

Law and Order Training for Civil Defense Emergency,
Student Manual - Part A SM-2.

Law and Order Training for Emergency Management - Part A
Instructor Guide (IG) IG-2.

Law and Order Training for Civil Defense Emergencies - Part B IG-2.1.

ANNEX I
LAW ENFORCEMENT

APPENDICES

APPENDIX 1 - Temporary Pass
TAB A - Sample Disaster Area Passes
APPENDIX 2 - Law Enforcement Resources

ANNEX I
LAW ENFORCEMENT

APPENDIX 1
TEMPORARY PASS

Bryan County Emergency Management

Official Vehicle

Temporary Pass

_____
Print Bearer's Name

_____
Valid Until Date/Time

_____
Issued on

_____
Issuing Officer

The driver and occupants of this vehicle, upon presentation of authorized Emergency Management Identification Cards, are authorized to pass in connection with OFFICIAL EMERGENCY MANAGEMENT BUSINESS. This card is to be displayed "ONLY" while the vehicle and its occupants are on OFFICIAL Business in the disaster area(s).

CARD #_____ DATE_____

AGENCY_____ _____
Emergency Management Director

BLANK PAGE

ANNEX I
LAW ENFORCEMENT

TAB A TO APPENDIX 1
SAMPLE DISASTER AREA PASSES

1. WORK PASS

WORK PASS
Authorized by
BRYAN COUNTY DISASTER UNIT
Date_____
Name_____
Address_____
_____
Signed_____

2. VISITOR PASS

VISITOR PASS
Authorized by
BRYAN COUNTY DISASTER UNIT
Date_____
Name_____
Address_____
_____
Signed_____

3. RESIDENT PASS

RESIDENT PASS
Authorized by
BRYAN COUNTY DISASTER UNIT
Date_____
Name_____
Address_____
_____
Signed_____

ANNEX I
LAW ENFORCEMENT

APPENDIX 2
LAW ENFORCEMENT RESOURCES
BRYAN COUNTY

CITY OR SERVICE	**SHERIFF** Sheriff Ken Golden Kevin Nave	**DURANT** Chief David Houser Deputy Chief Mike Woodruff	**ACHILLE** Chief NONE
Telephone Numbers (and alternate)	924-3000 924-0891 367-2609 (F)924-0259	911 924-3737 924-8589 Dir Disp 924-3748 Records (F)924-8928 Disp (F)924-8573 Records	Cell:
# Vehicles w/radio	22	48 (Gas)	3
Portable Generators	None	None	None
Mobile Crime Lab	None	None	None
Total Officers	16	41	1
Dispatchers	Consolidated	12 Total	None
EMTs	1 D.O. 1 EMT	None	None
Bomb Disposal	None	None	None
Scuba Trained	2	2 (Veenstra/Navid)	None
Deps/Res/Aux	8	13	0
Hand-Held Radios	45	84	3
Bull Horns	1	1	None
# Aircraft	2 (OH58) (C172)	None	None
Communications Van	None	None	None
K-9 Units	2	2	None
OLETS Teletype (Yes/No)	No	Yes	No

NOTE: 3 Oklahoma Dept. of Wildlife, Law Enforcement Game Warden with vehicle and two-way radio system is located in Durant, Ok. Central office Ph. OKC, Ok. (405)521-3719. OHP Troop E Headquarters- Durant, OK 924-2601 (F)916-4813 Troop Commander: Jeff Sewell

APPENDIX 2 (Cont)
LAW ENFORCEMENT RESOURCES
BRYAN COUNTY

CITY OF SERVICE	**BENNINGTON** Chief Kristopher Robinson	**BOKCHITO** Chief Mike Erwin	**CADDO** Chief Cody Borchardt
Telephone Numbers (and alternate)	Cell: 580-980-0611 Fax:	295-3818 1 Cell: 775-8651	367-2244 1 Cell: 775-4337
# Vehicles w/radio	3	5	3
Portable Generators	None	None	None
Mobile Crime Lab	None	None	None
Total Officers	2	4	3
Dispatchers	None	None	None
EMTs	None	None	None
Bomb Disposal	None	None	None
Scuba Trained	None	None	None
Deps/Res/Aux	3	1	2
Hand-Held Radios	None	9	3
Bull Horns	None	None	None
# Aircraft	None	None	None
Communication Van	None	None	None
K-9 Units	None	None	None
OLETS Teletype (Yes/No)	No	No	No

APPENDIX 2 (CON'T)
LAW ENFORCEMENT RESOURCES
BRYAN COUNTY

CITY OR SERVICE	**CALERA** Chief Don Hyde Asst. T.J. White	**COLBERT** Frank Burola	
Telephone Numbers (and Alternate)	434-7000 434-6999	296-2700 Cell# 580-230-6500	
#Vehicles w/Radio	9	5	
Portable Generators	1	None	
Mobile Crime Lab	None	None	
Total Officers	9	3	
Dispatchers	1	None	
EMT's	None	None	
Bomb Disposal	None	None	
SCUBA Trained	None	None	
Deps/Res/Aux	8	4	
Hand-Held Radios	10	12	
Bull Horns	1	None	
#of Aircraft	None	None	
Communication Van	1	None	
K-9 Units	1	None	
OLETS Teletype (Yes/No)	No	No	

Note: County Sheriff provides law enforcement for incorporated towns of Hendrix, Kemp, Kenefic, Mead and Silo.

ANNEX J
PUBLIC WORKS

I. PURPOSE.

This Annex establishes procedures and priorities for the use of all county maintenance and/or public works departments in response to an emergency or disaster in Bryan County.

All on-scene management of an incident will be in accordance with the **Incident Management System (ICS)**. The first responder on-scene will assume the Incident Commander's responsibilities, contain the incident and establish the Incident Command Post.

II. CONCEPT OF OPERATIONS.

General.

County Maintenance and/or Public Works Department responsibilities during periods of emergency require them to take necessary actions to prevent damage to public services, facilities and streets, and to restore them to normal operations, if damaged. County Maintenance and/or Public Works must also support Emergency Service Departments with actions to control damage and prevent loss of life. Priority of work for County Maintenance and/or Public Works during an emergency is the maintenance, or restoration, of water systems, sewage systems, and main transportation routes in that order.

III. TASK ORGANIZATION AND RESPONSIBILITIES.

A. General.

Most of the departments within the county governments have emergency functions related to their normal duties. County maintenance and/or public works departments will establish workable procedures for the maintenance, direction of repair and the restoration of vital functions within the community, including use of personnel and equipment to work on priority tasks. A current inventory of available resources is critical to this planning and prioritization of work. Coordination should also be made with other communities for use of equipment to aid in disaster response.

The Policy Group will approve and coordinate tasks not considered to be within the scope of normal department operations.

Mutual aid agreements should be arranged with neighboring communities and neighboring counties.

CALL OKIE - 1-800-522-6543 system should be used and disseminated to the public for use two working days prior to any digging.

B. Task Organization.

County Maintenance and/or Public Works Departments are responsible for the following:

ANNEX J
PUBLIC WORKS

1. Repair of roads, bridges and access to shelters.

2. Emergency sign preparation and assistance to law enforcement for posting signs and erecting barricades.

3. Clearing debris, trees, etc. from roads.

4. Maintain equipment for emergency use.

5. Snow removal and assistance to stranded motorists.

6. Provide earthmoving equipment for emergency use.

7. Other duties as assigned by the EOC.

ANNEX K
FIRE AND RESCUE

I. PURPOSE.

This annex establishes a sound and effective fire and rescue plan to be used in emergency or disaster situations. The goal of this plan is to ensure a rapid, coordinated response to any emergency to save lives, reduce personal injuries and damage to property. An additional goal is to ensure prompt location and rescue of trapped people in the disaster area and to recover the deceased.

All on-scene management of an incident will be in accordance with the **Incident Management System (ICS)**. The first responder on-scene will assume the Incident Commander's responsibilities, contain the incident and establish the Incident Command Post.

II. CONCEPT OF OPERATIONS.

General.

The responsibilities of a Fire Department in disaster situations are basically the same as those they perform daily. Their primary responsibility is to save life followed by fire suppression. In addition selected fire personnel may be trained in specialized skills such as Emergency Medical Technicians, advanced first aid, and extraction procedures. (See the Appendix to this Annex, for the resources of the Fire Departments within the county and those other fire services that provide mutual aid.)

III. TASK ORGANIZATION AND RESPONSIBILITIES.

A. Fire Department.

1. Fire suppression.
2. Operate warning system.
3. Respond to hazardous material accidents/incidents.
4. Assist in radiological protection measures.
5. Enforce fire code and fire prevention program.
6. Conduct search and rescue operations.

B. Mutual Aid Fire Department.

Provide fire units to assist in fire fighting and rescue operations when called upon in accordance with existing agreements.

IV. CONTINUITY OF GOVERNMENT.

A. Lines of succession for fire department(s) responding will be according to each department's established procedures.

B. Each responding Fire Chief will maintain control of his unit(s).

V. ADMINISTRATION AND LOGISTICS.

A. Communications.

Fire communications networks are shown in Annex B.

B. Resources.

A list of available fire departments and their resources is attached as an Appendix to this Annex.

VI. PLAN DEVELOPMENT AND MAINTENANCE.

A. The Fire Chief will coordinate the planning of all fire services related to emergency management operations.

B. Responsibility for development and maintenance of this Annex rests with the Fire Chief and the EM Director.

VII. AUTHORITIES AND REFERENCES.

FEMA-127, Attack Environment Manual, Chapter 3; What the Planner Needs to Know About Fire Ignition and Spread.

FEMA, Student Manual (SM) 9.2A Support Assistance for Fire Emergencies.

FEMA, SM 9, Rescue Skills and Techniques.

FEMA, CPG 1-6 Disaster Operations - A Handbook for Local Governments.

APPENDIX

APPENDIX 1 - Fire/Rescue Resources

ANNEX K
FIRE AND RESCUE

APPENDIX 1
FIRE/RESCUE RESOURCES

Community:	**DURANT** FIRE DEPT.	Chief: Roger Joines Cell# 775-0361	Asst. Marc Hall Cell# 775-2911
Phone #	924-2358 (F)924-9285	Ambulances	None
Email	rjoines@durant.org	Trained EMTs	24
Fire Stations	3	First Responders	36
Base Stations	3	Sedans	None
Mobile Radios	26	Utility Trucks	1 (Diesel)
Pagers	32	Pick-up Trucks	None
Hand-Held Radios	52	SCBAs/Spare Bottles	17/34
Paid Manpower	36	Generators	8 (7 on Trucks)
Volunteers	None	Light Systems	4 (On Trucks) 2 (TRT)
Pump Engines	Total of 4	Wreckers	None
a. 500 GPM	None	Gasoline Trucks	None
b. 750 GPM	None	Boats	None
c. 1000 GPM	None	Mutual Aid with: All Volunteer Fire Departments	
d. 1250 GPM	2 (Diesel)	a. Calera (Primary)	b.
e. 1500 GPM	1 (Diesel)	c.	d.
Ladder Trucks	None	e.	f.
Elev.Platforms	1 (Combined Unit)	g.	h.
Brush Pumpers	3 2 (Diesel) 1 (Gas)	i.	j.
Tanker Trucks	(1) 3,500 gal (Diesel)	k.	l.
Rescue Calls (Yes/No)	Yes	*3 Jaws of Life, SCBA Fill Station, Confined Space Trailer, Structural collapse capability, Rope Rescue, Trench Collapse, Surface Water Rescue, Trash water Pump, Torch Set, Jackhammer, Chainsaws, Concrete Saw, Track Horse with hydraulic output for tools, Mobile Incident Command Post with TCB4 Com Center, Region 5 TRT Team. Swiftwater Rescue. The Durant Fire Dept has verbal mutual aid agreements with all 17 volunteer fire departments in our county*	
Crash-Fire Rescue(Yes/No)	Yes		
Underwater Rescue(Yes/No)	No		
Rescue Squads (Yes/No)	Yes		

Note: ALL PHONE NUMBERS ARE IN THE 580 AREA CODE UNLESS OTHERWISE NOTED

APPENDIX 1 (Cont.)
FIRE/RESCUE RESOURCES

Community:	**ACHILLE** FIRE DEPT.	Chief: Patrick Davis Cell# (580) 916-5363	Asst.None Cell#
Phone #	283-3434	Ambulances	None
Email		Trained EMTs	1
Fire Stations	1	First Responders	1
Base Stations	1	Sedans	0
Mobile Radios	6	Utility Trucks	0
Pagers	eDispatch	Pick-up Trucks	0
Hand-Held Radios	11	SCBAs/Spare Bottles	6/6
Paid Manpower	None	Generators	1
Volunteers	10	Light Systems	None
Pump Engines	Total of 1	Wreckers	None
a. 500 GPM	None	Gasoline Trucks	None
b. 750 GPM	None	Boats	None
c. 1000 GPM	None	Mutual Aid with:	
d. 1250 GPM	1(Diesel)	a. Colbert	b. Calera
e. 1500 GPM	None	c. Kemp	d.
Ladder Trucks	None	e.	f.
Elev.Platforms	None	g.	h.
Brush Pumpers	2 (Gas)	i.	j.
Tanker Trucks	None	k.	l.
Rescue Calls (Yes/No)	Yes	Other Resources: Jaws of Life, and other special equipment. Jaws	
Crash-Fire Rescue(Yes/No)	Yes		
Underwater Rescue(Yes/No)	No		
Rescue Squads (Yes/No)	No		

Note: ALL PHONE NUMBERS ARE IN THE 580 AREA CODE UNLESS OTHERWISE NOTED

ANNEX K
FIRE AND RESCUE

APPENDIX 1 (Cont.)
FIRE/RESCUE RESOURCES

Community:	**ALBANY** FIRE DEPT.	Chief: Todd Baugh Cell# 230-9584	Asst. Nathan Stricklen Cell# 579-0019
Phone #	924-8818	Ambulances	None
Email	None	Trained EMTs	None
Fire Stations	1	First Responders	None
Base Stations	None	Sedans	None
Mobile Radios	3	Utility Trucks	None
Pagers	eDispatch	Pick-up Trucks	None
Hand-Held Radios	8	SCBAs/Spare Bottles	4
Paid Manpower	None	Generators	1
Volunteers	8	Light Systems	None
Pump Engines	Total of 1	Wreckers	None
a. 500 GPM	1 (Gas)	Gasoline Trucks	None
b. 750 GPM	None	Boats	None
c. 1000 GPM	None	Mutual Aid with:	
d. 1250 GPM	None	a. Bokchito	b. West Bryan Co.
e. 1500 GPM	None	c. Durant	d.
Ladder Trucks	None	e.	f.
Elev.Platforms	None	g.	h.
Brush Pumpers	1 (Gas)	i.	j.
Tanker Trucks	1 (Gas)	k.	l.
Rescue Calls (Yes/No)	No	Other Resources: Jaws of Life, foam	
Crash-Fire Rescue(Yes/No)	No		
Underwater Rescue(Yes/No)	No		
Rescue Squads (Yes/No)	No		

Note: ALL PHONE NUMBERS ARE IN THE 580 AREA CODE UNLESS OTHERWISE NOTED

ANNEX K
FIRE AND RESCUE

APPENDIX 1 (Cont.)
FIRE/RESCUE RESOURCES

Community:	**BENNINGTON** FIRE DEPT. Chief: James Owens Cell# 775-2164		Asst.
Phone #	847-2064	Ambulances	None
Email	jo.station20@gmail.com	Trained EMTs	1
Fire Stations	1	First Responders	1
Base Stations	None	Sedans	None
Mobile Radios	5	Utility Trucks	None
Pagers		Pick-up Trucks	None
Hand-Held Radios	20	SCBAs/Spare Bottles	5
Paid Manpower	None	Generators	None
Volunteers	10	Light Systems	None
Pump Engines	Total of 1	Wreckers	None
a. 500 GPM	None	Gasoline Trucks	None
b. 750 GPM	None	Boats	None
c. 1000 GPM	1 (Gas)	Mutual Aid with:	
d. 1250 GPM	None	a. Bokchito	b. Boswell
e. 1500 GPM	None	c. Wade	d.
Ladder Trucks	None	e.	f.
Elev.Platforms	None	g.	h.
Brush Pumpers	1 (Gas) 1 (Diesel)	i.	j.
Tanker Trucks	2 (Diesel)	k.	l.
Rescue Calls (Yes/No)	Yes	Other Resources: Jaws of Life, float pump, other special equipment. Jaws of Life	
Crash-Fire Rescue(Yes/No)	Yes		
Underwater Rescue(Yes/No)	No		
Rescue Squads (Yes/No)	No		

Note: ALL PHONE NUMBERS ARE IN THE 580 AREA CODE UNLESS OTHERWISE NOTED

ANNEX K
FIRE AND RESCUE

APPENDIX 1 (Cont.)
FIRE/RESCUE RESOURCES

Community:	**BOKCHITO** FIRE DEPT.	Chief Johnny Ashby Cell# 775-2572	
Phone #	295-3775	Ambulances	None
Email	bokchito@gmail.com	Trained EMTs	3
Fire Stations	2	First Responders	None
Base Stations	1	Sedans	None
Mobile Radios	7	Utility Trucks	None
Pagers	9/eDispatch	Pick-up Trucks	None
Hand-Held Radios	12	SCBAs/Spare Bottles	8/10
Paid Manpower	None	Generators	None
Volunteers	12	Light Systems	None
Pump Engines	Total of 1	Wreckers	None
a. 500 GPM	None	Gasoline Trucks	None
b. 750 GPM	None	Boats	None
c. 1000 GPM	None	Mutual Aid with:	
d. 1250 GPM	1 (Diesel)	a. Albany	b. Bennington
e. 1500 GPM	None	c. Freeny Valley	d. Philadelphia
Ladder Trucks	None	e. Caddo	f. Wade
Elev.Platforms	None	g.	h.
Brush Pumpers	5 (2 Gas) (3 Diesel)	i.	j.
Tanker Trucks	1 (Diesel)	k.	l.
Rescue Calls (Yes/No)	Yes	Other Resources: Jaws of Life, float pump, other special equipment.	
Crash-Fire Rescue(Yes/No)	Yes		
Underwater Rescue(Yes/No)	No		
Rescue Squads (Yes/No)	No	*Bokchito Frequency 155.055*	

Note: ALL PHONE NUMBERS ARE IN THE 580 AREA CODE UNLESS OTHERWISE NOTED

APPENDIX 1 (Cont.)
FIRE/RESCUE RESOURCES

Community:	**CADDO** FIRE DEPT.	Chief: Todd Miller Cell# 513-3931	Asst.Geoffrey Wingfield Cell# 367-5014
Phone #	367-2244	Ambulances	None
Email	tmiller@shamrockbank.com	Trained EMTs	4
Fire Stations	1	First Responders	2
Base Stations	1	Sedans	None
Mobile Radios	8	Utility Trucks	None
Pagers	eDispatch/14	Pick-up Trucks	None
Hand-Held Radios	8	SCBAs/Spare Bottles	6/6
Paid Manpower	None	Generators	None
Volunteers	13	Light Systems	None
Pump Engines	Total of 2	Wreckers	None
a. 500 GPM	None	Gasoline Trucks	None
b. 750 GPM	1 (Gas) 1(Diesel)	Boats	None
c. 1000 GPM	None	Mutual Aid with: All Bryan Co. Volunteer Fire Depts.	
d. 1250 GPM	None	a. Caney	b. Durant
e. 1500 GPM	None	c. Freeny Valley	d.
Ladder Trucks	None	e.	f.
Elev.Platforms	None	g.	h.
Brush Pumpers	6 (Gas)	i.	j.
Tanker Trucks	1 (Gas) 2000 Gal	k.	l.
Rescue Calls (Yes/No)	No	Other Resources: Jaws of Life, float pump, other special equipment.	
Crash-Fire Rescue(Yes/No)	Yes		
Underwater Rescue(Yes/No)	No		
Rescue Squads (Yes/No)	No		

Note: ALL PHONE NUMBERS ARE IN THE 580 AREA CODE UNLESS OTHERWISE NOTED

APPENDIX 1 (Cont.)
FIRE/RESCUE RESOURCES

Community:	**CALERA** FIRE DEPT.	Chief: Brian Norton Cell# 580-916-1887	Asst. Rodney Forbis Cell# 580-513-0054
Phone #	434-5300	Ambulances	None
Email	bnorton@bcems.net	Trained EMTs	9
Fire Stations	2	First Responders	16
Base Stations	2	Sedans	None
Mobile Radios	11	Utility Trucks	1
Pagers	25/eDispatch	Pick-up Trucks	1
Hand-Held Radios	35	SCBAs/Spare Bottles	18/45
Paid Manpower	None	Generators	5 (3 on Trucks)
Volunteers	25	Light Systems	3 (On Trucks)
Pump Engines	Total of 3	Wreckers	None
a. 500 GPM	None	Gasoline Trucks	4
b. 750 GPM	None	Boats	1
c. 1000 GPM	None	Mutual Aid with:	
d. 1250 GPM	2 (Diesel)	a. Durant	b. Colbert
e. 1500 GPM	1 (Diesel)	c. Roberta	d. West Bryan Co.
Ladder Trucks	None	e. Cartwright	f.
Elev.Platforms	None	g.	h.
Brush Pumpers	3 (Gas)	i.	j.
Tanker Trucks	2 (Diesel)	k.	l.
Rescue Calls (Yes/No)	Yes	Other Resources: Jaws of Life, float pump, other special equipment. *2 Piercing Nozzles, Floating Pump, Drop Tanks, Light Towers, Light Tower with Generator 2 sets of Jaws, Cascade fill system*	
Crash-Fire Rescue(Yes/No)	Yes		
Underwater Rescue(Yes/No)	No		
Rescue Squads (Yes/No)	Yes		

Note: ALL PHONE NUMBERS ARE IN THE 580 AREA CODE UNLESS OTHERWISE NOTED

APPENDIX 1 (Cont.)
FIRE/RESCUE RESOURCES

Community:	**CARTWRIGHT** FIRE DEPT. Chief: Jeff Christman Asst. David Bray Cell# 775-3825 Cell# 931-7874		
Phone #	965-4477	Ambulances	None
Email	cvfd@cherokeetel.com	Trained EMTs	3
Fire Stations	1	First Responders	3
Base Stations	1	Sedans	None
Mobile Radios	15	Utility Trucks	2 HMMWV
Pagers	eDispatch	Pick-up Trucks	None
Hand-Held Radios	15	SCBAs/Spare Bottles Cascade Filler	14/29
Paid Manpower	None	Generators	1
Volunteers	15	Light Systems	3 (2 on trucks)
Pump Engines	Total of 3	Wreckers	None
a. 500 GPM	None	Gasoline Trucks	None
b. 750 GPM	None	Boats	2 (1 Lake) (1Airboat)
c. 1000 GPM	3 (Diesel)	Mutual Aid with:	
d. 1250 GPM	None	a. Colbert	b. Calera
e. 1500 GPM	None	c. Achille	d.
Ladder Trucks	None	e.	f.
Elev.Platforms	None	g.	h.
Brush Pumpers	2 (Gas)	i.	j.
Tanker Trucks	1 (Diesel)	k.	l.
Rescue Calls (Yes/No)	Yes	Other Resources: Jaws of Life, float pump, other special equipment. Jaws of Life, Foam Jaws, Cascade Filler, Bulldozer, Backhoe, Forklift	
Crash-Fire Rescue(Yes/No)	Yes		
Underwater Rescue(Yes/No)	Yes		
Rescue Squads (Yes/No)	No		

Note: ALL PHONE NUMBERS ARE IN THE 580 AREA CODE UNLESS OTHERWISE NOTED

ANNEX K
FIRE AND RESCUE

APPENDIX 1 (Cont.)
FIRE/RESCUE RESOURCES

Community:	**COLBERT** FIRE DEPT. Cell# 775-0271	Chief: Ronnie Giesler Cell# (580) 775-0721	Asst. Jonathan Horn Cell# (580)-434-2472
Phone #	296-2000	Ambulances	None
Email	rgiesler315@hotmail.com	Trained EMTs	10
Fire Stations	1	First Responders	4
Base Stations	1	Sedans	1 Expedetion
Mobile Radios	12	Utility Trucks	None
Pagers	eDispatch and Handhelds	Pick-up Trucks	None
Hand-Held Radios	25	SCBAs/Spare Bottles	10/20
Paid Manpower	None	Generators	2 (On Trucks)
Volunteers	25	Light Systems	3 (On Trucks)
Pump Engines	Total of 2	Wreckers	None
a. 500 GPM	1 (Gas)	Gasoline Trucks	None
b. 750 GPM	None	Boats	2 (1 Pontoon) (1 Air)
c. 1000 GPM	None	Mutual Aid with:	
d. 1250 GPM	1 (Diesel)	a. Cartwright	b. Achille
e. 1500 GPM	None	c. Calera	d.
Ladder Trucks	None	e.	f.
Elev.Platforms	None	g.	h.
Brush Pumpers	3 2 (Gas) 1 (Diesel)	i.	j.
Tanker Trucks	2 (Diesel)	k.	l.
Rescue Calls (Yes/No)	Yes	Other Resources: Jaws of Life, float pump, other special equipment. *Jaws of life, Air Bag System, Mobile Air Cascade System, CAF System (on R17)* Jaws, Air Bags, Rams, Cascade Fill Station	
Crash-Fire Rescue(Yes/No)	Yes		
Underwater Rescue(Yes/No)	Yes		
Rescue Squads (Yes/No)	Yes		

Note: ALL PHONE NUMBERS ARE IN THE 580 AREA CODE UNLESS OTHERWISE NOTED

ANNEX K
FIRE AND RESCUE

APPENDIX 1 (Cont.)
FIRE/RESCUE RESOURCES

Community:	**FREENY VALLEY** FIRE DEPT. Chief: Don Singleton Cell# 775-4499	Asst: Russel Prentice Cell# 775-0175	
Phone #	None	Ambulances	None
Email	None	Trained EMTs	None
Fire Stations	1	First Responders	1
Base Stations	None	Sedans	None
Mobile Radios	6	Utility Trucks	None
Pagers	1	Pick-up Trucks	None
Hand-Held Radios	16	SCBAs/Spare Bottles	None
Paid Manpower	None	Generators	None
Volunteers	16	Light Systems	None
Pump Engines	1 Total	Wreckers	None
a. 500 GPM	None	Gasoline Trucks	None
b. 750 GPM	None	Boats	None
c. 1000 GPM	None	Mutual Aid with:	
d. 1250 GPM	1 (Gas)	a. Bokchito	b. Caddo
e. 1500 GPM	None	c. Bennington	d.
Ladder Trucks	None	e.	f.
Elev.Platforms	None	g.	h.
Brush Pumpers	4 (3 Gas) (1 Diesel)	i.	j.
Tanker Trucks	2 (2 Diesel)	k.	l.
Rescue Calls (Yes/No)	No	Other Resources: Jaws of Life, float pump, other special equipment.	
Crash-Fire Rescue(Yes/No)	No		
Underwater Rescue(Yes/No)	No		
Rescue Squads (Yes/No)	No		

Note: ALL PHONE NUMBERS ARE IN THE 580 AREA CODE UNLESS OTHERWISE NOTED

ANNEX K
FIRE AND RESCUE

APPENDIX 1 (Cont.)
FIRE/RESCUE RESOURCES

Community:	**KEMP** FIRE DEPT.	Chief: Jeremy Sisemore Cell# 434-2777	Asst. Michael DeLong 580-931-6074
Phone #	838-2515	Ambulances	None
Email	None	Trained EMTs	None
Fire Stations	1	First Responders	None
Base Stations	None	Sedans	None
Mobile Radios	7	Utility Trucks	None
Pagers	eDispatch	Pick-up Trucks	None
Hand-Held Radios	20	SCBAs/Spare Bottles	7/11
Paid Manpower	None	Generators	1
Volunteers	13	Light Systems	1
Pump Engines	Total of 1	Wreckers	None
a. 500 GPM	None	Gasoline Trucks	None
b. 750 GPM	None	Boats	None
c. 1000 GPM	None	Mutual Aid with:	
d. 1250 GPM	1 (Diesel)	a. Achille	b. Yuba
e. 1500 GPM	None	c.	d.
Ladder Trucks	None	e.	f.
Elev.Platforms	None	g.	h.
Brush Pumpers	2 (Diesel) 2 (Gas)	i.	j.
Tanker Trucks	2 (4000 Gal Diesel) (2500 Gal Diesel)	k.	l.
Rescue Calls (Yes/No)	Yes	Other Resources: Jaws of Life, float pump, other special equipment. Jaws of Life	
Crash-Fire Rescue(Yes/No)	Yes		
Underwater Rescue(Yes/No)	No		
Rescue Squads (Yes/No)	No		

Note: ALL PHONE NUMBERS ARE IN THE 580 AERA CODE UNLESS OTHERWISE NOTED

APPENDIX 1 (Cont.)
FIRE/RESCUE RESOURCES

Community:	**LAKEWOOD** FIRE DEPT. Chief: Sherri Thomas Cell# 380-1917 Asst. Zachary Thomas Cell# 775-5078		
Phone #	931-8647	Ambulances	None
Email		Trained EMTs	1
Fire Stations	1	First Responders	2
Base Stations	1	Sedans	None
Mobile Radios	5	Utility Trucks	None
Pagers	eDispatch	Pick-up Trucks	None
Hand-Held Radios	9	SCBAs/Spare Bottles	4/4
Paid Manpower	None	Generators	None
Volunteers	5	Light Systems	None
Pump Engines	1	Wreckers	None
a. 500 GPM	None	Gasoline Trucks	None
b. 750 GPM	None	Boats	None
c. 1000 GPM	None	Mutual Aid with:	
d. 1250 GPM	None	a. Silo	b. West Bryan Co.
e. 1500 GPM	1 (Diesel)	c.	d.
Ladder Trucks	None	e.	f.
Elev.Platforms	None	g.	h.
Brush Pumpers	2(Diesel)	i.	j.
Tanker Trucks	2 (Diesel)	k.	l.
Rescue Calls (Yes/No)	Yes	Other Resources: Jaws of Life, float pump, other special equipment. Swiftwater (Mutual aid Colbert Cartwright and West Bryan County) EMRA	
Crash-Fire Rescue(Yes/No)	Yes		
Underwater Rescue(Yes/No)	2		
Rescue Squads (Yes/No)	No		

Note: ALL PHONE NUMBERS ARE IN THE 580 AREA CODE UNLESS OTHERWISE NOTED

APPENDIX 1 (Cont.)
FIRE/RESCUE RESOURCES

Community:	PHILADELPHIA FIRE DEPT.	Chief: Ron Parks Cell# 775-3090	Asst.Anthony Winnett Cell# 775-0733
Phone #	None	Ambulances	None
Email	Philadelphia-VFD@hotmail.com	Trained EMTs	None
Fire Stations	2	First Responders	None
Base Stations	None	Sedans	None
Mobile Radios	7	Utility Trucks	None
Pagers	eDispatch/10	Pick-up Trucks	None
Hand-Held Radios	6	SCBAs/Spare Bottles	4/4
Paid Manpower	None	Generators	None
Volunteers	13	Light Systems	None
Pump Engines	None	Wreckers	None
a. 500 GPM	None	Gasoline Trucks	None
b. 750 GPM	1 (Diesel)	Boats	None
c. 1000 GPM	None	Mutual Aid with:	
d. 1250 GPM	None	a. Bokchito	b. Durant
e. 1500 GPM	None	c. Roberta	d. Freeny Valley
Ladder Trucks	None	e. Albany	f.
Elev.Platforms	None	g.	h.
Brush Pumpers	4 3 (Gas) 1 (Diesel)	i.	j.
Tanker Trucks	1 (Diesel)	k.	l.
Rescue Calls (Yes/No)	No	Other Resources: Jaws of Life, float pump, other special equipment.	
Crash-Fire Rescue(Yes/No)	No		
Underwater Rescue(Yes/No)	No	2 Smoke Fans	
Rescue Squads (Yes/No)	No		

Note: ALL PHONE NUMBERS ARE IN THE 580 AREA CODE UNLESS OTHERWISE NOTED

APPENDIX 1 (Cont.)
FIRE/RESCUE RESOURCES

Community:	**ROBERTA** FIRE DEPT.	Chief: Andy Daniel Cell# 920-5780	Asst. Mark Shepard Cell# 920-3806
Phone #	None	Ambulances	None
Email	roberta_vfd@hotmail.com	Trained EMTs	0
Fire Stations	1	First Responders	7 EMR
Base Stations	None	Sedans	None
Mobile Radios	8	Utility Trucks	None
Pagers	None (eDispatch)	Van (Battalion former 15 passenger)	1 (Gas)
Hand-Held Radios	20 (page capable)	SCBAs/Spare Bottles	15/15
Paid Manpower	None	Generators	1
Volunteers	20	Light Systems	None
Pump Engines	Total of 1 (Gas)	Wreckers	None
a. 500 GPM	None	Gasoline Trucks	None
b. 750 GPM	None	Boats	None
c. 1000 GPM	None	Mutual Aid with:	
d. 1250 GPM	1 (Diesel)	a. Philadelphia	b. Calera
e. 1500 GPM	None	c. Durant	d. Achille
Ladder Trucks	None	e.	f.
Elev.Platforms	None	g.	h.
Brush Pumpers	3 1 (Gas) 2 (Diesel)	i.	j.
Tanker Trucks	3 (diesel)	k.	l.
Rescue Calls (Yes/No)	Yes (No Jaws)	Other Resources: Jaws of Life, float pump, other special equipment. Gator UTV 40 gallon, Portable 3000 gallon dump tank, fixed air filling station for SCBA/SCUBA/Cascade, Portable Cascade system for filling SCBA/SCUBA (4-4500psi Bottle System)	
Crash-Fire Rescue(Yes/No)	Yes		
Underwater Rescue(Yes/No)	No		
Rescue Squads (Yes/No)	No		

Note: ALL PHONE NUMBERS ARE IN THE 580 AREA CODE UNLESS OTHERWISE NOTED

APPENDIX 1 (Cont.)
FIRE/RESCUE RESOURCES

Community:	**SILO** FIRE DEPT.	Chief: Jon (Smitty) Nabors Cell# 920-0816	Asst. Rusty Parr Cell# 931-7686
Phone #	580-920-0816	Ambulances	None
Email	smittystaxidermy@yahoo.com	Trained EMTs	0
Fire Stations	1	First Responders	4
Base Stations	None	Sedans	None
Mobile Radios	6	Utility Trucks	None
Pagers	12	Pick-up Trucks	None
Hand-Held Radios	12	SCBAs/Spare Bottles	6/6
Paid Manpower	None	Generators	2 (on trucks)
Volunteers	10	Light Systems	2 (on truck)
Pump Engines	Total of 1	Wreckers	None
a. 500 GPM	None	Gasoline Trucks	None
b. 750 GPM	None	Boats	None
c. 1000 GPM	None	Mutual Aid with:	
d. 1250 GPM	1 (Diesel)	a. Durant	b. Lakewood
e. 1500 GPM	None	c. Calera	d. Caddo
Ladder Trucks	None	e. Marshall Co.	f. Johnston Co.
Elev.Platforms	None	g.	h.
Brush Pumpers	3 (2Diesel) (1 Gas)	i.	j.
Tanker Trucks	1 (Diesel)	k.	l.
Rescue Calls (Yes/No)	Yes	Other Resources: Jaws of Life, float pump, other special equipment. Fast Attack Rescue Vehicle. Jaws Draft Pump Portable drop tank on tanker. Argo amphibious ATV	
Crash-Fire Rescue(Yes/No)	Yes		
Underwater Rescue(Yes/No)	No		
Rescue Squads (Yes/No)	No		

Note: ALL PHONE NUMBERS ARE IN THE 580 AREA CODE UNLESS OTHERWISE NOTED

APPENDIX 1 (Cont.)
FIRE/RESCUE RESOURCES

Community:	**WADE** FIRE DEPT.	Chief: Mike Berka Cell# 380-1702	Asst. Cell#
Phone #	None	Ambulances	None
Email	tberka@wb4me.com	Trained EMTs	None
Fire Stations	1	First Responders	0
Base Stations	None	Sedans	None
Mobile Radios	15	Utility Trucks	1 (Diesel)
Pagers	eDispatch	Pick-up Trucks	None
Hand-Held Radios	9	SCBAs/Spare Bottles	6/12
Paid Manpower	None	Generators	None
Volunteers	13	Light Systems	None
Pump Engines	Total of 1	Wreckers	None
a. 500 GPM	None	Gasoline Trucks	None
b. 750 GPM	None	Boats	None
c. 1000 GPM	None	Mutual Aid with:	
d. 1250 GPM	1 (Diesel)	a. Albany	b. Bennington
e. 1500 GPM	None	c. Bokchito	d. Yuba
Ladder Trucks	None	e. Achille	f. Roberta
Elev.Platforms	None	g. Philadelphia	h. Kemp
Brush Pumpers	2 (Diesel) 2 (Gas)	i.	j.
Tanker Trucks	3 (Diesel)	k.	l.
Rescue Calls (Yes/No)	Yes	Other Resources: Jaws of Life, float pump, other special equipment. Jaws of Life	
Crash-Fire Rescue(Yes/No)	Yes		
Underwater Rescue(Yes/No)	No		
Rescue Squads (Yes/No)	No		

Note: ALL PHONE NUMBERS ARE IN THE 580 AREA CODE UNLESS OTHERWISE NOTED

ANNEX K
FIRE AND RESCUE

APPENDIX 1 (Cont.)
FIRE/RESCUE RESOURCES

Community:	**WEST BRYAN** FIRE DEPT. Chief: Brandon Hall Cell# 380-1803	Asst. Collin Canada Cell# 775-4806	
Phone #	920-2808	Ambulances	None
Email	Westbryancountyfire rescue@yahoo.com	Trained EMTs	3
Fire Stations	2	First Responders	13
Base Stations	2	Sedans	None
Mobile Radios	12	Utility Trucks	None
Pagers	Handhelds/eDispatch	Pick-up Trucks	None
Hand-Held Radios	30	SCBAs/Spare Bottles	21/20
Paid Manpower	None	Generators	3 (On Trucks)
Volunteers	17	Light Systems	2 (On Trucks)
Pump Engines	Total of 3	Wreckers	None
a. 500 GPM	None	Gasoline Trucks	None
b. 750 GPM	1 (Diesel)	Boats	1
c. 1000 GPM	1 (Diesel)	Mutual Aid with:	
d. 1250 GPM	None	a. Calera	b. Silo
e. 1500 GPM	1 (Diesel)	c. Lakewood	d. Durant
Ladder Trucks	None	e. Caddo	f. Colbert
Elev.Platforms	None	g. Texoma	h. Achille
Brush Pumpers	3 3(Gas)	i.	j.
Tanker Trucks	2 (gas)	k.	l.
Rescue Calls (Yes/No)	Yes	Other Resources: Jaws of Life, float pump, other special equipment. *Jaws of Life, Mobile Cascade/ Rehab Unit, Command Unit, Fixed Air Fill Station, Training Facility, 3000 gallon drop tank, Swiftwater*	
Crash-Fire Rescue(Yes/No)	Yes		
Underwater Rescue(Yes/No)	Yes		
Rescue Squads (Yes/No)	Yes		

Note: ALL PHONE NUMBERS ARE IN THE 580 AREA CODE UNLESS OTHERWISE NOTED

APPENDIX 1 (Cont.)
FIRE/RESCUE RESOURCES

Community:	**YUBA** FIRE DEPT.	Chief: Greg Hagood Cell# (903)821-3818	Asst. Chuck Prater Cell# (580)285-3232
Phone #	285-2164	Ambulances	None
Email	gdhagood@yahoo.com	Trained EMTs	None
Fire Stations	1	First Responders	3
Base Stations	None	Sedans	None
Mobile Radios	7	Utility Trucks	1 (Gas)
Pagers	eDispatch	Pick-up Trucks	1 (Gas)
Hand-Held Radios	25	SCBAs/Spare Bottles	6/6
Paid Manpower	None	Generators	1
Volunteers	20	Light Systems	None
Pump Engines	1 Total	Wreckers	None
a. 500 GPM	None	Gasoline Trucks	None
b. 750 GPM	None	Boats	None
c. 1000 GPM	None	Mutual Aid with:	
d. 1250 GPM	1 (Diesel)	a. Kemp	b. Albany
e. 1500 GPM	None	c. Wade	d. Colbert
Ladder Trucks	None	e. Philadelphia	f. Roberta
Elev.Platforms	None	g.	h.
Brush Pumpers	2 (Diesel)	i.	j.
Tanker Trucks	4 (Diesel)	k.	l.
Rescue Calls (Yes/No)	YES	Other Resources: Jaws of Life, float pump, other special equipment. Foam , Jaws of Life, AED	
Crash-Fire Rescue(Yes/No)	No		
Underwater Rescue(Yes/No)	No		
Rescue Squads (Yes/No)	No		

Note: ALL PHONE NUMBERS ARE IN THE 580 AREA CODE UNLESS OTHERWISE NOTED

BLANK PAGE

ANNEX L
VETERINARY SERVICES/ANIMAL CARE

I. PURPOSE.

This annex establishes coordination procedures for local government agencies, volunteer organizations and veterinary medical personnel in providing care to animals affected by man-made or natural disasters. These procedures provide for emergency medical care, temporary confinement, shelter, food and water, identification and tracking for return to owner and ultimate disposal of dead and unclaimed animals as necessary.

II. CONCEPT OF OPERATIONS.

General

A. Emergency animal care will be provided by private and public professionals based on pre-event coordination and the instructions contained in this document. Additional animal medical care professionals are available and will be utilized according to the size and type of disaster.

B. Animal Control services will be an extension of normal Licensed Animal Control Officers duties. In the event that no such officers are present, responsibility will be local law enforcement personnel coordinating with local animal care professionals.

C. Private shelters, local humane associations and local animal related groups can be an excellent source for both manpower and material resources.

III. TASK ORGANIZATION AND RESPONSIBILITIES.

A. Organization

1. The city/town animal control function will remain as it currently exists. These agencies will function in their normal capacity and, as required, render and receive support and assistance in accordance with existing mutual aid agreements. Local animal care professionals will function in their normal capacity and render assistance in coordination with local animal control agencies. Private and volunteer groups will coordinate with local animal control agencies.

2. Supporting Organizations:

a. Area veterinary clinics
b. Area humane and volunteer groups
c. Area boarding and grooming facilities
d. Area animal products supply stores
e. State agencies as required
f. District veterinary representatives
g. State veterinary, technician and animal control associations
h. American Zoological Association (AZA)
i. Wildlife control personnel

j. Emergency Management

B. Task Assignment and responsibilities

1. Responsibilities of the County Animal Care Coordinator:

a. Coordination between county authorities and local animal control and local animal care professionals.

b. Coordination between local animal control, local animal care professionals and State/Federal organizations.

c. Coordinate county animal relief activities including but not limited to sheltering, evacuation procedures, long-term boarding, fostering and adoption.

d. Responsible for coordination and collection of animal rescue and recovery data from local shelters, veterinary clinics and other sources.

2. Each City/town's animal control agency will be the coordinating lead agency for animal rescue activities. They will coordinate with local animal care professionals. They will coordinate volunteer organizations to provide needed services. In the event there is no local animal control agency then local law enforcement personnel will coordinate with local animal care professionals to provide animal care.

3. The Oklahoma Veterinary Medical Association's district directors, or in their absences, alternate district director shall be responsible for coordination of emergency field veterinarians.

4. In the event of a foreign animal disease outbreak, the lead agency will be the Oklahoma Department of Agriculture, Food and Forestry (ODAFF) working in a unified command with USDA APHIS-VS and coordinate all necessary activities

IV. DIRECTION AND CONTROL.

Local animal control agencies are responsible for animal rescue activities. They are also responsible for coordination of local volunteer organizations. In the event that local animal control agencies are not established, these responsibilities will be local law enforcement agencies that will delegate this authority to local animal care professionals. Local animal care professionals are responsible for veterinary medical care for affected animals. The coordination of activities will be the responsibility of the County Animal Care Coordinator and the Veterinary Emergency Triad (VET). The VET shall consist of the Oklahoma State Veterinarian (or his/her designee), the USDA/APHIS/VS Area Veterinarian in Charge (or his/her designee) and a designated representative of the Oklahoma Veterinary Medical Association (OVMA) or the State Department of Health in the event of a zoonotic disease.

V. CONTINUITY OF GOVERNMENT.

The order of succession will be in accordance with local Standard Operating Procedures (SOP's)

VI. ADMINISTRATION AND LOGISTICS.

The county animal care coordinator will serve with the county and local emergency management personnel for disaster exercise as well as actual disasters.

VIII. PLAN DEVELOPMENT AND MAINTENANCE.

The County animal care coordinator shall conference with the VET and local animal control agencies at least once annually to review this annex and ensure that necessary updates and revisions are prepared and implemented.

APPENDIX

APPENDIX 1 – Foreign Animal Disease (FAD)

BLANK PAGE

ANNEX L
VETERINARY SERVICES/ANIMAL CARE

APPENDIX 1
FOREIGN ANIMAL DISEASE (FAD)

I. PURPOSE.

The occurrence of a Foreign Animal Disease (FAD) whether an intentional criminal or terrorist act or natural occurrence in the County would represent a catastrophic even. It's far reaching effects would impact not only on the local economy but at the state and national level as well. The threat to the nation's food supply, export losses and eradication cost should not be under estimated. While prevention of a FAD outbreak will always remain the primary goal, contingency plans must be in place no matter what the event. The County's goal is to contain the possible outbreak of a FAD, thereby protecting lives and property until State and Federal agency can activate their plans.

It is the policy of the County to quickly respond to, investigate, coordinate with and take direction from the Oklahoma Department of Agriculture, Food and Forestry (ODAFF) to prevent the introduction of, or the spread of any Foreign Animal Disease (FAD).

This policy will apply to any reported FAD outbreak or highly contagious disease that may or may not become a Public Health concern; and any announced or unannounced chemical or biological attack on any sector of the agriculture community in the County.

The purpose of this FAD Appendix is to supplement the Emergency Management Plans of the County and its incorporated and unincorporated cities and towns in the event of a FAD outbreak. The plan was developed in conjunction with existing local plans and the Oklahoma Department of Agriculture, Food and Forestry (ODAFF) plan. Developing a partnership with the live stock industry, identifying all possible available resources and the development of a communication network between all parties will be critical to the successful implementation of the plan should it ever be needed.

II. SITUATION AND ASSUMPTIONS.

See Section II, Basic Plan

III. CONCEPT OF OPERATIONS.

General

The objectives of the plan are to establish a Multi-Agency Coordinating Group (MACG) of highly educated and experienced members with knowledge of every facet of the live stock industry in the county. Members of the MACG will be representatives of the beef, dairy, poultry and hog industry, the feeder industry, the equine industry, local cooperatives, producer, sales, veterinarians as necessary, local government, law enforcement and emergency management. Further, the MACG will consist of representatives from the Board of County Commissioners, local first responders, public health, the county extension agent, communications and public works.

IV. TASK ORGANIZATION AND RESPONSIBILITIES.

The MACG members will have 4 primary responsibilities.

1. Be liaisons for their respective industry and promote education of their peers to the plan and its goals and objectives and the plan's testing component.

2. Respond to the Emergency Operations Center in the event of a FAD outbreak, rumored outbreak or an announced or unannounced bio-terrorism attack on the industry. Once there serve as experts in communication with Oklahoma Department of Agriculture Food and Forestry (ODAFF) and the County Emergency Manager.

3. Communicate with peers, release approved, factual, up-to-date information and data to their respective industries and serve as support to the Emergency Manager in trouble shooting, consequence management and securing any resource that may be needed.

4. Work with other MACG members in consequence management.

The MACG will:

1. React and respond as needed to all events, real or rumored, by immediately opening the Emergency Operations Center and summoning all MACG members.

2. To the greatest extent possible: a) evaluate data from all facets of the industry, b) as the event as it progresses, analyze, and disseminate only factual information to protect the economic stability of the community and reduce the likelihood of civil unrest.

3. Determine if the event will pose a public health concern with direction from the County Health Department.

4. The MACG will support the onsite Incident Management Team as assigned by the Oklahoma AVIC (Area Veterinarian in Charge) and the State Veterinarian.

5. Through quarantine procedures implemented by the Sheriff, Oklahoma Highway Patrol (OHP) and the Oklahoma Bureau of Investigation (OSBI), prevent the accidental or intentional spread of the index source.

6. If the FAD is not contained, the event will be managed appropriately in terms of decontamination and will be the responsibility of the local Fire/Emergency Medical Services personnel with the required support and direction of the Oklahoma Department of Agriculture, United States Department of Agriculture, (USDA) Oklahoma Department of Health, and Environmental Protection Agency (EPA).

7. Investigate, with direction from the Federal Bureau of Investigation (FBI) and the Oklahoma State Bureau of Investigation (OSBI) in cases of suspected terrorist acts to ensure the collection and preservation of evidence for impending criminal cases.

8. Test the plan on a continuing basis, with lessons learned serving as the basis for plan revisions. Plan testing will include participation in local, State, and Federal exercises as applicable. Education efforts based on the plan will be focused as follows.

a. MACG members will be notified of related education opportunities.

b. The FAD MACG sub-committee chairman will brief the Local Emergency Planning Committee (LEPC) on the progress of the team and any changes in the plan.

c. Industry representatives will be invited to participate in presentations, seminars, or other related training activities.

d. MACG presentations may be made to civic groups who make a request.

e. The MACG members will maintain interaction with FAD subject matter experts at whatever level possible, maintain an active dialogue with animal health officials and academia to keep informed of the latest developments.

Responses typically will occur in the following Phases:

Phase One

After notification of a possible FAD by ODAFF, the Sheriff's department will send necessary patrol unit(s) to the site and restrict all animal traffic into and out of the site.

At least one Cleaning and Decontamination (C & D) station will be at the site to disinfect all vehicles coming out of the site at a designated ingress/egress point.

The Sheriff will have command of the site.

The site will need at least one patrol unit and one C & D.

Actions:

1. Contain movement of animals to the suspicious premise.
2. Clean and disinfect all personnel and vehicles exiting the suspicious premise.

Phase Two

After notification from the Foreign Animal Disease Diagnostician (FADD) of a highly possible or highly probable infected animal, the sheriff's department will:

1) set up a containment area of one mile (or as determined by the FADD) around the site,
2) stop all animal traffic,
3) reroute all other animal traffic around the site.
4) Provide adequate patrol units to secure the site.

At least one Cleaning and Decontamination unit will be set up at the designated ingress/egress location outside the one mile (or as determined by the FADD) containment area and all traffic out of the containment area will have to go to that site to be cleaned and decontaminated before leaving the site.

During Phase Two the Sheriff will have command of the site.

It is during Phase Two that the Sheriff will determine if the EOC will be activated.

Actions:

1. Contain all animal movement within 1 mile (or as determined by the FADD) of the suspicious premise.
2. All vehicles must exit through one cleaning and disinfectant point.
3. All vehicles entering must belong to the affected premise or residences within the containment zone, if not assigned to the incident.

(State Veterinarian from Oklahoma Department of Agriculture, Animal Industry Division may send support during this phase.)

Phase Three

After notification of positive conformation of a FAD at the site, the sheriff will request the Oklahoma Highway Patrol (OHP) to lock down the county. No animal traffic will be allowed to come into or go out of the county. At the time of positive confirmation, USDA and the Oklahoma State Veterinarian will assume incident command.
All animal carriers will be disinfected before they can leave the county.

Law enforcement will be responsible for stopping all animal traffic and ensuring that all animal carriers are disinfected. Cleaning and decontamination units will be strategically located to disinfect all animal carriers.

Phase Two will still be in effect at the site.

Actions:

1. Prevent animal traffic entering and or leaving guarantined area.
2. Re-route animal traffic around the guarantined area.
3. Minimize access within 1 mile (or as determined by APHIS/VS) of the quarantined area.

4. **PREVENT ANIMAL TRAFFIC FROM ENTERING OR LEAVING THE COUNTY UNTIL FURTHER NOTICE BY THE OKLAHOMA DEPARTMENT OF AGRICULTURE, FOOD AND FORESTRY (ODAFF).**

VI. CONTINUITY OF GOVERNMENT.

The order of succession will be in accordance with local Standard Operating Procedures (SOP's)

VII. ADMINISTRATION AND LOGISTICS.

The FAD MACG will work closely with the County Emergency Management Director for all administration and logistic needs.

VIII. PLAN DEVELOPMENT AND MAINTENANCE.

The FAD MACG will, at least once annually, review this annex and ensure that necessary updates and revisions are prepared and implemented.

BLANK PAGE

ANNEX N
RESOURCE MANAGEMENT

I. PURPOSE.

This annex provides for the proper coordination of resources to respond effectively to an emergency. County resources will be the most available during a county emergency and should be used accordingly; however, as county resources become depleted, mutual aid resources and state resources may be requested.

Resource Management is an important part of the National Incident Management System (NIMS). Equipment typing and personnel credentialing are on-going components of the system. Resource managers should be aware of these efforts and adjust their resource lists as more information becomes available from the NIMS Integration Center (NIC).

II. CONCEPT OF OPERATIONS.

General.

It is the responsibility of local government to protect lives and property of local citizens. Among the actions to be taken toward this end are the following: commit all resources necessary to protect lives or property and restore the community to normal. When all local resources have been expended, request assistance through the Oklahoma Department of Emergency Management. Emergency Managers (county/city/town) should maintain a Resources Management Manual that contains lists of local resources that can be used during an emergency.

III. TASK ORGANIZATION AND RESPONSIBILITIES.

During any emergency, local government will coordinate essential resources to be used to restore essential services and aid disaster victims. The aim of this Resources Management Annex is to utilize available resources and trained personnel to carry out each required task effectively. One of the day-to-day functions of Emergency Management Director is to ensure that planning, identification and training of all resources is accomplished prior to any emergency. Among the many resources needed during an emergency are the following:

A. Heavy Equipment.

1. Machinery for clearing debris.
2. Bulldozers.
3. Backhoes.
4. Draglines.
5. Cranes.

B. Specialized Equipment.

1. Chain saws.

2. Fire fighting equipment.

3. Water pumps.

4. Rescue equipment.

5. Generators.

6. Portable Toilets.

C. Temporary Shelters.

1. American Red Cross Shelters.

2. Hotels and motels.

3. Public facilities.

   a. Schools, colleges and universities.

   b. Parks and recreation buildings.

   c. Other government buildings.

4. Private facilities.

   a. Churches.

   b. Clubs and resorts.

   c. Office buildings.

   d. Stores.

IV. DIRECTION AND CONTROL.

The Resource Coordinator, under the direction of the Emergency Management Director, will be responsible for the acquisition, distribution, management, and coordination of resources and supplies. The Resources Management Manual(s) will be used to identify and list available sources from which needed resources can be obtained during emergencies. The Resource Coordinator will develop and maintain the Resources Management Manual for use during times of crisis. Routine checks of supplies and equipment availability will be made to ensure the manual is accurate.

V. ADMINISTRATION AND LOGISTICS.

A. Communications.

The communication network required to obtain resources in times of emergency is a responsibility of the EOC Communications Officer and must remain functional during an emergency.

B. Resources.

A copy of the County Resources Management Manual(s) will be maintained in the EOC for ready reference.

C. Records.

The Resource Coordinator will keep records of any material, supplies, and equipment used from private sources during an emergency and forward them to the County Clerk for settlement following the emergency, if required.

VI. AUTHORITIES AND REFERENCES.

References.

FEMA, State and Local Guide 100 (SLG 100); Guide for Increasing Local Government Civil Defense Readiness During Periods of International Crisis.

State Emergency Operations Plan, State of Oklahoma.

County Resources Management Manual.

County Commissioners Inventory Reports.

APPENDICES

APPENDIX 1 - Map - Equipment Yard and Staging Area Locations
APPENDIX 2 - Potential Staging Areas
APPENDIX 3 - Listing of Portable Restroom/Toilet Resources

BLANK PAGE

ANNEX N
RESOURCE MANAGEMENT

APPENDIX 1
EQUIPMENT YARD AND STAGING AREA LOCATIONS

All phones are in Area Code 580:

District # 1	County Barn, Durant	924-5814
District # 2	County Barn, Achille	283-3711
District # 3	County Barn, Bokchito	295-3737

Primary Staging Area....Community Center, Durant, OK
Secondary Staging Area. Eaker Field, Durant, OK

Note: Equipment list on file at County Commissioners Office

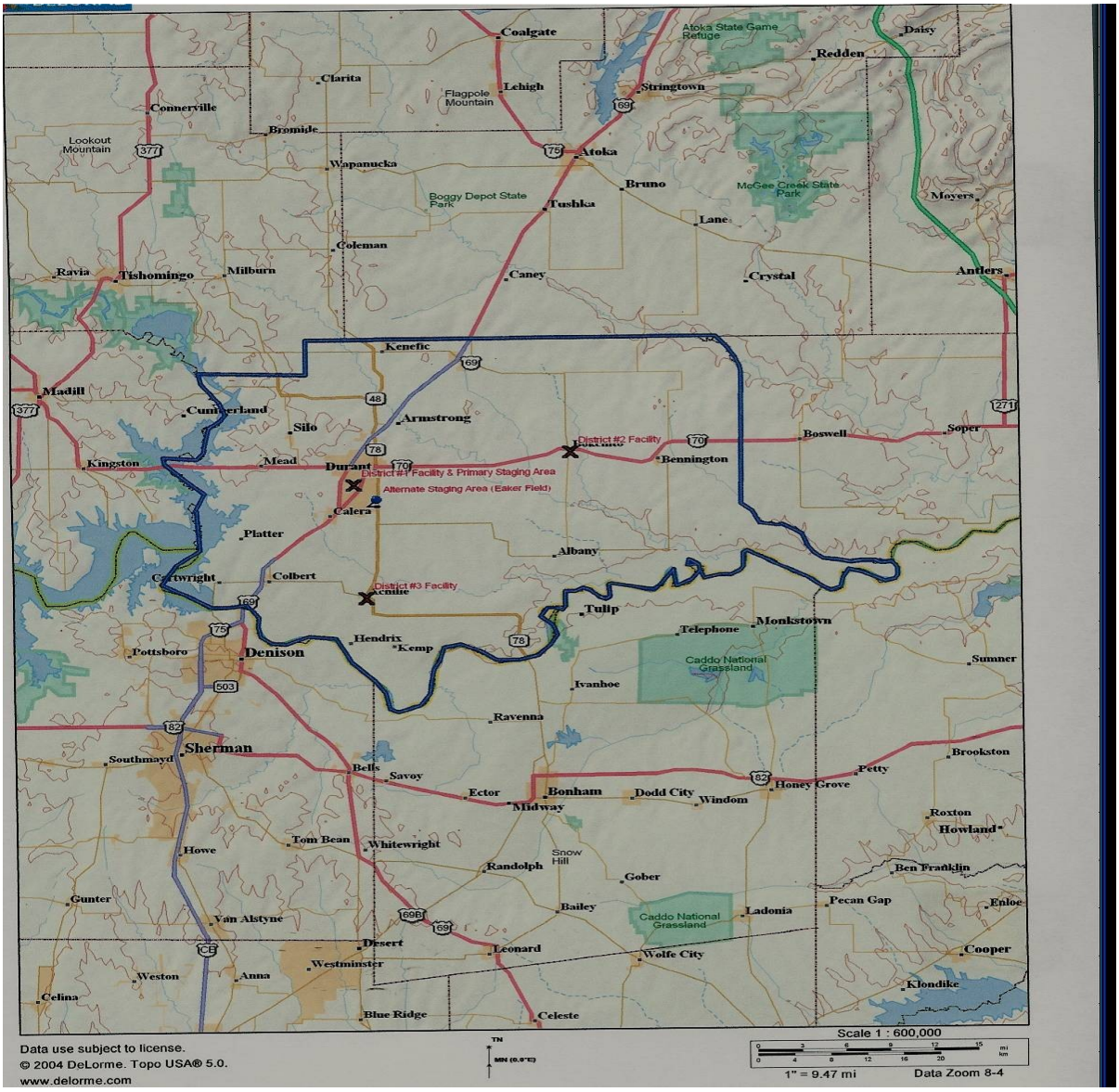

ANNEX N
RESOURCE MANAGEMENT

BLANK PAGE

ANNEX N
RESOURCE MANAGEMENT

APPENDIX 2
BRYAN COUNTY POTENTIAL STAGING AREAS

I. PURPOSE.

This Appendix provides the necessary information for locating Staging Areas (SAs) in Bryan County. The use of Staging Areas is an extension of the Incident Command System and provides for the orderly reception and dispatch of emergency resources. Use of staging areas enhances the response phase of the comprehensive emergency management system during disasters. They can be used when dealing with disasters that are within the capabilities of county and city governments as well as when receiving outside assistance from state and federal governments.

II. CONCEPT OF OPERATIONS.

A. General.

Both a primary and secondary staging areas is identified for Bryan County.

B. Characteristics.

Staging Areas should be large enough to provide for the following:

1. Accommodate parking for all wheel vehicles.

2. Two access roads; entrance and exit.

3. Marked landing zone for rotary wing aircraft.

4. An administrative area for the Staging Area Coordinator and his/her assistants to accomplish their tasks.

5. Have two types of communication available within the Staging Area.

III. STAGING AREA LOCATIONS.

A. General.

In view of the geographical shape of Bryan County, two staging areas were selected. The first (primary) is central to the county for the purpose of supporting the central and northern portions. The second, located to the south side of the county with the intent of supporting the southern portions.

B. Locations.

1. Primary Staging Area is the Bryan County Community Center.

The primary staging area is located on South 9th Street in Durant, or Business Highway 69 South. (See appendix 1)

2. Secondary Staging Area.

The secondary staging area is located at the Durant Municipal Airport on Waldron Road, south of Durant on Business Highway 69. (See appendix 1).

3. Durant Municipal Airport.

The Municipal Airport is located 4 miles south of the City of Durant. It is a small municipal airport and should take careful note of the following Airport data.

Latitude:	33* 56.54N	Longitude:	96* 23.67W
Elevation:	698 Ft (S)	Location Identification:	DUA
From City:	04S	Owner:	City of Durant 580-924-7222
Runway: 17/35-5000' Asphalt		Airport Contact:	Dewayne Williams, 580-920-0574 Cell 580-230-1188
Lights:	MIRL, REIL	Fuel: 100LL, Jet Fuel	
Radio:	U122.8,359 DUA	Attended:	7 Days, 0900-1800

REMARKS:

Pilot controlled lighting. Runway Lights Dusk-Dawn.

ANNEX N
RESOURCE MANAGEMENT

APPENDIX 3 (East)
LISTING OF PORTABLE RESTROOM/TOILET RESOURCES

Name of Company	**Address**	**Phone #**
A-1 Little John Portable Toilets		800-786-1725
Blackburn Pumping & Portables	Box 816, Durant, OK	580-775-1779
Triple A,	Box 212, Springdale, AR	501-751-1316
Ever-Ready Jons of OK,	7248 E Seminole, Tulsa, OK	918-835-3762
Johnny On The Spot,	126 N Erie Place, Tulsa, OK	918-838-0636
Nail's Chem-O-Let Portable Toilets,	424 E Kalamazoo Ave, Muskogee, OK	918-687-3521
Porta-John of Tulsa,	7417 E Reading Place, Tulsa, OK	918-836-8657
Roto-Rooter Portable Toilet Service,	8125 Skelly Drive, Tulsa, OK	918-622-6996
Triple A Plumbing,	McAlester, OK	918-423-4113

BLANK PAGE

ANNEX N
RESOURCE MANAGEMENT

APPENDIX 3 (West)
LISTING OF PORTABLE RESTROOM/TOILET RESOURCES

Name of Company	**Address**	**Phone #**
ARA Equip Rental & Sales, Portable Toilets	2318 W. Gore Blvd, Lawton	353-3258 or 355-1537
Big Bob's Lease A John,	5202 SW 11th, Lawton	1-800-348-6592
BFI Portable Services,	4625 S Rockwell, OK City	745-2941
Port-O-Let,	7701 Classen Blvd, OKC	848-7907
Caddo Chemical Can Co,	2232 NE 4, OKC	236-4431
	Toll Free Dial"1" then 800-522-4288	
Crossland's Rent-All & Sales Co.	716 SE 29, OKC	1-800-522-4944
Custom Disposal Service,	7 W. Broadway, Ardmore	223-0404
Tri-County Toilet Rental,	Rt 1, Clinton, OK	323-4520

BLANK PAGE

ANNEX P
DAMAGE ASSESSMENT

I. PURPOSE.

This annex provides guidelines for the assessment of damage resulting from disasters that may occur within the community.

II. CONCEPT OF OPERATIONS.

General.

Disaster intelligence is a tool for action and involves the complete cycle in which information about an event is collected, processed, evaluated, and disseminated to those who need it. This is a key process in caring for the short and long-term disaster needs of the people in the community. Damage assessment, which is an element of disaster intelligence, is an appraisal or determination of the actual effects on human, economic and natural resources resulting from an emergency or disaster. Delayed assessments may cause hardship as well as erode confidence in the ability of the community to react in time of emergency. Although a rapid preliminary assessment is desirable and should be reported to the State EOC as soon as possible, a more accurate assessment should be compiled as soon as weather and other local conditions permit. Trained observers should be used to assess actual damage.

III. TASK ORGANIZATIONS AND RESPONSIBILITIES.

A. General.

Disaster intelligence and damage assessment are two functions that must be properly conducted in order to properly respond to and recover from an emergency or disaster.

B. Task Assignment and Responsibility.

1. The Policy Group.

Responsible for directing and controlling emergency functions, both public and private, in disaster relief operations.

2. The Emergency Management Director responsibilities.

a. The Emergency Management Director should be located in the EOC and will be responsible to the Policy Group for overseeing all disaster intelligence and damage assessment activities.

b. Using information received from the Damage Assessment Officer, advise the Policy Group on resource shortfalls, and coordinate with volunteer groups, surrounding jurisdictions, and the State EOC to obtain additional resources needed by the community.

c. Insure that all information and Structural Damage Assessment reports (Appendix 1, Tab A) are completed and summarized on the Structural Damage Assessment Summary Worksheet (Appendix 1, Tab B) which will be forwarded to the Oklahoma Department of Emergency Management (OEM) as soon as they become available.

d. Insure that coordination is made with OEM and the Federal Emergency Management Agency (FEMA) in scheduling and conducting joint preliminary damage assessments if the joint surveys are required. This coordination will be made through OEM.

3. The County Damage Assessment Officer.

a. It is recommended that the Damage Assessment Officer be located in the EOC and be responsible to the Emergency Management Director for the operation of damage assessment teams and for receiving and compiling all damage reports.

b. Activate the teams to assess damage to public and private property; assign teams to the areas which are to be surveyed; and, coordinate the surveys with other groups.

c. Compile all damage assessment team reports and reports from other sources, such as the American Red Cross. Provide this information to the Emergency Management Director, (See Appendix 1).

d. Assist the Emergency Management Director in establishing the recommended sequence of repairs and priorities for restoration of facilities by the appropriate service organizations.

4. Damage Assessment Teams.

a. The Damage Assessment teams, each of which should consist of a minimum of three individuals, a team leader/recorder, an observer and a driver, are responsible for particular portions (quarters) of the city or county.

b. Response activities when a disaster occurs are as follows:

(1) Damage Assessment Teams report to EOC for assignment instructions.

(2) Damage Assessment Teams record damage information, plot locations on maps, and take pictures if the situation permits. NOTE: Team members must not interfere with First Responder personnel.

(3) Teams return the information they collect to the Damage Assessment Officer at the EOC and receive further instructions.

(4) The Damage Assessment Officer compiles all information received from the teams and provides same to the Emergency Management Director.

5. The American Red Cross (ARC).

a. The American Red Cross, by ARC Regulation 3029, is required to submit a preliminary damage assessment survey of homes to the operations headquarters of the jurisdiction involved in a disaster within 24 hours and submit a detailed damage assessment within 72 hours.

b. A copy of the Red Cross damage survey information is provided to the State EOC.

IV. ADMINISTRATION AND LOGISTICS.

A. Reports and Records.

1. Damage assessment report forms will be forwarded to OEM.

2. See Appendix 1 for Damage Report Forms.

3. Sufficient records will have to be maintained to document all costs to the community caused by the disaster.

B. Individual Relief Assistance

All individual disaster assistance provided by the government will be administered with policies set forth by the Oklahoma Department of Emergency Management and those Federal agencies providing such assistance.

C. Public Relief Assistance

All public relief disaster assistance provided by the government will be administered with policies set forth by OEM and those Federal agencies providing such assistance.

V. AUTHORITIES AND REFERENCE.

A. Oklahoma Department of Emergency Management Publication: Local Government Guide To Disaster Response Operations.

B. Oklahoma Department of Emergency Management Publication: Documenting

ANNEX P
DAMAGE ASSESSMENT

Disaster Damage for Public Assistance.

APPENDICES

Appendix 1 - Damage Assessment for Recovery Operations

ANNEX P
DAMAGE ASSESSMENT

APPENDIX 1
DAMAGE ASSESSMENT FOR RECOVERY OPERATIONS

I. PURPOSE.

This appendix provides guidelines for conducting ongoing damage assessment and reporting operations following a disaster for the purpose of restoring the community to its pre-disaster condition and obtaining assistance from the State and/or Federal Government.

II. SITUATION AND ASSUMPTIONS.

A. Situation.

1. When a disaster/emergency occurs that is of such severity and magnitude that effective response is beyond the capabilities of the affected local government the jurisdiction can request assistance from the State and/or Federal government.

2. OEM is the point of contact at the State level of government for communities that need assistance during emergencies or disasters.

3. In order to determine if state and/or federal recovery assistance can be made available, it is imperative that the local community/jurisdiction provide accurate and timely damage assessment information to OEM on a continuing basis, following a disaster.

B. Assumptions.

1. Local communities will develop and train damage assessment teams.

2. Local communities will request State and Federal assistance through OEM, and provide copies of their damage assessment reports as a part of their requests.

3. OEM will provide an orderly and continuing means of assistance by the State government to local governments in carrying out their responsibility to alleviate the suffering and damage which results from major disasters and emergencies.

III. INDIVIDUAL ASSISTANCE RECOVERY OPERATIONS:

A. General.

1. The Structural Damage Assessment Form, OEM Form DA-1, will be used to record damage information collected by the Structural Damage Assessment Teams. These forms, the results of the survey, will be summarized by the Damage Assessment Officer on the Structural Damage Assessment Summary Worksheet (OEM Form DA-2) that should be provided to OEM as soon as possible.

2. Following the initial structural damage survey that is completed shortly after the occurrence of a disaster, the damage assessment teams should conduct a Comprehensive Structural Damage Assessment Survey to get more detailed information of the type and severity of the damages as well as accurate insurance information again using OEM Form DA-1.

3. Copies of these updated assessment forms should be forwarded to the state office as soon as they are completed.

4. OEM will contact the local jurisdiction to schedule joint damage surveys if they are required.

5. Following the joint damage surveys and if a Presidential disaster declaration for individual assistance is declared, the State office will coordinate with the local jurisdiction to establish a disaster assistance center or recovery service center, and continue to work with the local government during the assistance process.

B. Information Required By The State.

1. A Declaration of a State of Emergency (See Annex A, Appendix 4, Tab E for example) signed by the Chief Elected Official(s). Note: Damage Assessment Reports are used to determine if damage is sufficient to warrant a declaration of emergency.

2. Copies of all Structural Damage Assessment Reports.

3. A map of the community, marked to show the most serious areas, then the major damaged areas, and areas which received minor damage.

4. Any requests for assistance should be documented in writing.

IV. PUBLIC ASSISTANCE RECOVERY OPERATIONS.

A. General.

1. The Infrastructure Damage Assessment Form (OEM Form DA-3), which is used for consolidating and reporting public sector damage (infrastructure) information (See Tab C) is the same form that will be used by the State in determining the need for setting up joint federal/state/local preliminary damage assessments.

2. Following the initial public property damage surveys, the damage assessment officer should continue to work with local department heads to get more detailed information of the type and severity of the damages that occurred to the public sector, as well as accurate insurance information.

3. As this updated information becomes available it should be forwarded to

OEM either by FAX or by Phone. **Only the major damage and destruction needs to be reported to the State.**

4. The OEM will contact the local jurisdiction to schedule joint damage surveys if they are required for either public assistance or individual assistance.

5. Following the joint damage surveys, and if a Presidential disaster declaration for public assistance, (or a Gubernatorial declaration for public assistance) is declared, the State office will set up applicant briefings to begin the public assistance process.

B. Information Required By The State.

1. A Declaration of a State of Emergency (See Annex A, Appendix 4, Tab E for example) signed by the Chief Elected Official. Note: Damage Assessment Reports are used to determine if damage is sufficient to warrant a declaration of emergency.

2. A copy of the Notice of Interest Form, or a phone call that provides the same type of information.

3. Requests for specific assistance may be made telephonically, by radio, FAX or E-Mail.

V. BUSINESS AND INDUSTRY ECONOMIC INJURY.

A. General.

1. The Supporting Documentation for Business and Industry (OEM DA-4) will be used to record information collected relating to economic loss to business and industry.

2. While the comprehensive structural damage assessment survey is being completed, information should be collected on damage to business and industry. This information will form the basis for a request to the Small Business Administration for a disaster declaration.

3. Copies of the OEM Form DA-4 should be forwarded to the state office as soon as they are completed.

B. Information Required By The State.

1. A Declaration of a State of Emergency (See Annex A, Appendix 4, Tab E for example) signed by the Chief Elected Official. Note: Damage Assessment Reports are used to determine if damage is sufficient to warrant a declaration of emergency.

2. A copy of the Notice of Interest Form, or a phone call that provides the

same type of information.

3. Requests for specific assistance may be made telephonically, by radio, FAX or E-Mail.

ANNEX Q
HAZARDOUS MATERIALS

I. PURPOSE.

The purpose of this annex is to identify and reduce/remove the threat to public health and safety which may result from an accident involving hazardous materials. This annex covers both fixed-site and transportation accidents.

All on-scene management of an incident will be in accordance with the **Incident Management System (ICS)**. The first responder on-scene will assume the Incident Commander's responsibilities, contain the incident and establish the Incident Command Post.

II. CONCEPT OF OPERATIONS.

General.

A. Hazardous material accidents require early identification of the hazardous material to formulate a plan of action to handle the emergency. Response should be directed toward containing the hazardous material and/or evacuating those threatened by potential exposure to the material. After the threat has been stabilized by containment and evacuation, if necessary, the next step is to safely clean up the material.

B. The person receiving a report of a hazardous material release should obtain as much information as possible upon being notified of a spill/leak. The form in Appendix 1 serves as a guide to secure critical information which should, if possible, be passed to emergency response personnel prior to their arrival on the scene. Frequently, additional information pertaining to the nature of the hazard is needed. Appendix 2 contains a list of sources of information and potential responding agencies. Contacts should be established early to insure these organizations or agencies can provide timely information or data.

C. Responding units should treat all spills as hazardous until the material(s) can be identified as to their safety.

1. At transportation accident sites, hazardous materials may be identified by shipping papers, ID numbers, placards, labels on containers, or verbally by the truck driver or railroad conductor/engineer.

2. At fixed-site incidents, pre-fire plans, NFPA 704-Diamond container labels and/or information obtained from site employees may be used to identify hazardous materials contained within the site.

D. To the extent possible, operations should be:

1. Upwind
2. Uphill
3. Upstream

E. Emergency vehicles should be backed in and operators should be prepared to

move them if conditions worsen.

III. ORGANIZATION AND ASSIGNMENT OF RESPONSIBILITIES.

A. Organization.

1. The individual designated as the community emergency coordinator (usually the emergency manager) must be notified immediately if a hazardous materials spill or release is large enough to require the activation of the Local Emergency Planning Committees' (LEPC) Emergency Operations Plan (EOP).

2. Appendix 3, this annex, depicts a typical layout for a HAZMAT operation. The size of the spill, characteristics of the material, and potential threat determine the structure of the emergency response effort. A small spill may require only an Operations Commander, but a larger spill additionally may require all or part of the following:

a. Incident Commander.

b. EOC activation.

c. Staging area.

d. Decontamination site.

3. In any case, an incident report should be submitted to the Oklahoma Department of Emergency Management.

B. Task assignment and responsibility.

1. Incident Command System (ICS).

a. Incident Commander.

The Incident Commander will initially be the senior first responder present at the scene. As (or/if) the incident progresses and more experienced and trained personnel arrive on site, command may be relinquished to a more experienced person. This will normally be the senior fire service officer, on-site, from the local municipal fire department, or if the incident/accident is outside corporate limits, from the closest municipal department. (THE EXCEPTION TO THIS WILL BE; WHEN THE ACCIDENT SITE IS OUTSIDE CORPORATE LIMITS ON A ROADWAY, RAILROAD, OR PUBLIC PROPERTY, THE INCIDENT COMMANDER WILL NORMALLY BE THE SENIOR OKLAHOMA HIGHWAY PATROL (OHP) OFFICER PRESENT.)

Incident Commander responsibilities are:

(1) Implementing protective actions.

(2) Location of incident command post.

(3) Coordinate the actions of all responding agencies.

(4) Maintain communications with operations command post, the Emergency Operations Center (EOC), if activated, and others as appropriate.

(5) Notification of the Department of Environmental Quality and other appropriate agencies as soon as reasonably possible.

b. An Operations Chief and other members of the ICS team will be appointed by the Incident Commander as required, and will function in accordance with the established Incident Command System.

2. Oklahoma Department of Environmental Quality.
405-702-6174 or 1-800-522-0206

Provide technical assistance as required.

3. Oklahoma Department of Emergency Management.
405-521-2481 or 1-800-800-2481

a. Coordinate state support as requested by on-scene responders or local EM director.

b. Notifies appropriate state and federal agencies as required.

4. National Response Center. **1-800-424-8802**

a. Notifies all appropriate federal authorities.

b. Maintains contact with all federal agencies that can furnish information, direction, or assistance to on-scene responders.

5. CHEMTREC. **1-800-424-9300**

a. CHEMTREC is a public service of the Chemical Manufacturers Association and provides immediate advice for those at the scene of emergencies, then promptly contacts the shipper/generator of the hazardous materials involved for more detailed assistance and appropriate follow-up.

b. CHEMTREC operates 24 hours a day, seven days a week. Every

effort should be made to keep a phone line open so that the shipper/generator can make contact with the on-scene leaders to provide guidance and assistance.

c. CHEMTREC provides advice for fixed site as well as transportation emergencies.

IV. DIRECTION AND CONTROL.

A. General.

Primary direction and control rests with the Incident Commander. Each response agency shall maintain control over their personnel and equipment and shall send a liaison to the command post as required.

B. Procedure.

See Appendix 3, this annex for a typical layout for hazardous materials operations.

V. ADMINISTRATION AND LOGISTICS.

A. Records and forms.

1. The Release Notification form for reporting hazardous materials spills/accidents is found in Appendix 1 to this annex.

2. Information on the Release Notification form is necessary for responders and may also be important during cleanup and reimbursement procedures.

B. Resources.

Agencies with HAZMAT response capabilities and task assignments are responsible for providing and maintaining equipment and supplies necessary for hazardous materials operations.

C. Training.

Local emergency response personnel will attend training as specified in 29 CFR 1910.120(q). The Emergency Management Director may coordinate training. However, each agency is responsible for certifying competency and maintaining training records for their own personnel.

D. Post-incident review.

The county EM Director along with others on the LEPC, should conduct a review of plans and procedures within ten days of an incident. This review should be attended

by those who were directly involved in the emergency for purposes of identifying plan deficiencies and recommending changes.

VI. PLAN DEVELOPMENT AND MAINTENANCE.

This annex will be reviewed at least annually. It will be the responsibility of the EM Director, in coordination with others on the LEPC, including fire chiefs, to update and maintain this plan.

VII. AUTHORITIES AND REFERENCES.

References.

1. CPG 1-6, "Disaster Operations - A Handbook for Local Governments."

2. NRT-1, "Hazardous Materials Emergency Planning Guide."

3. NRT-1A, "Criteria for Review of Hazardous Materials Emergency Plans."

4. RSPA "Emergency Response Guidebook."

5. PL99-499, TITLE III, Emergency Planning and Community Right-To Know Act of 1986 (EPCRA).

6. Oklahoma Environmental Quality Act.

7. Oklahoma Hazardous Materials Planning and Notification Act.

8. Oklahoma Emergency Response Act.

APPENDIXES

APPENDIX 1 - Hazardous Materials Release Notification

APPENDIX 2 - Federal/State Telephone List/Roster

APPENDIX 3 - HAZMAT Operations - Typical Layout

APPENDIX 4 - General Characteristics and Examples of Hazardous Materials

APPENDIX 5 - Transportation Routes of Hazardous Materials

APPENDIX 6 - Printout of Facilities Filing Tier I or Tier II Reports as Subject to and Reported to Planning Under EPCRA

APPENDIX 1

HAZMAT RELEASE NOTIFICATION

Caller's Name:_____

Caller's Identification:_____
(e.g., Position in organization)
Caller's Telephone Number (Incl Area Code):_____
(Number where someone can be reached for additional information)
Name and Address of Responsible Party: _____
(Facility Owner/Operator
if Fixed Site) _____
(Truck, Rail, or Pipeline Operator
if Transportation Incident) _____

Material(s) Released:_____

_____

Is Released Material on Extremely Hazardous List? Yes__ No__ Unk___

Location of Release:_____
_____
Include Legal Description Below(If Appropriate & Known)

___1/4___1/4___1/4, Sec.___Twp.___Rng.___ County_____
Quantity of Material(s) Released:_____
Released into: (Medium - Air, Water, Soil, etc.)_____
Release - Date_____ Time_____ Duration_____
Any known or anticipated health risks (acute or chronic) associated
with the release:_____
_____
Any medical advice or treatment deemed necessary for any exposed
individuals:_____
_____
Precautions that need to be taken:_____
_____
Additional Information: Injuries___ Deaths___ LEPC Notified?_____

DEQ Notified?__, NRC (800)424-8802 Notified?__ Other Info_____
Person Receiving Rpt:_____Date/Time_____/_____
NOTE: Call Dept of Environmental Quality (405-702-6174 or 800-522-0206) if they have not already been notified.

BLANK PAGE

ANNEX Q
HAZARDOUS MATERIALS

APPENDIX 2
FEDERAL/STATE TELEPHONE LIST

Any of the numbers below can be called for information, guidance, or assistance.

State Assistance	**Phone Number**
1. Oklahoma Department of Emergency Management	405-521-2481* Toll Free: 1-800-800-2481*
2. State Department of Environmental Quality (DEQ)	405-702-6100
Hazardous Materials Release (Including Radioactive Materials and/or any Hazardous Wastes)	405-702-6174* Toll Free: 1-800-522-0206*
3. Oklahoma Highway Patrol HQ, OKC	405-424-1616*
4. State Department of Transportation	405-521-2554

Durant District Cell Numbers:
Robert Norris – Superintendent 580-513-7963
Ashley Hawkins P.E. Division 2 Maintenance Engineer 918-210-5424
Dylan Helms 580-931-7072 Raymond Faull 580-775-1707
Glen Romines 580-579-4061 Dale Cochran 580-579-4905
Charles Phillips 580-677-0409 Woody Heflin 580-775-5669
Brady Wilcox 580-775-5161 Julie Brown AT III 580-775-0224

5. Oklahoma National Guard	405-228-5000
6. Oklahoma Poison Control Center	405-271-5454* Toll Free: 1-800-222-1222
7. Oklahoma Water Resources Board	405-530-8800
8. Oklahoma Corporation Commission	
Oil & Gas Division	405-521-2301
Pollution Abatement	405-521-2201
Transportation Division	405-521-2251
Railroad Safety	405-521-3407
9. State LP Gas Administration	405-521-2458
10. Oklahoma Department of Wildlife	405-521-4600

*** 24 hours a day** **Updated July 2016**

APPENDIX 2
FEDERAL/STATE TELEPHONE LIST (CONT)

Any of the numbers below can be called for information, guidance, or assistance.

Federal Assistance	**Phone Number**
1. National Response Center	Toll Free: 1-800-424-8802*
a. Center is staffed by Coast Guard personnel.	
b. Notifies all appropriate federal authorities.	
c. Maintains contact with all federal agencies that can furnish information, direction, or assistance to on-scene responders.	
2. US Army Explosive Ordinance Disposal (EOD) Fort Sill, Oklahoma	580-442-2313*
3. Federal Aviation Administration Operations Center Fort Worth, Texas	817-222-5006
4. US Environmental Protection Agency	1-866-372-7745*
5. US Department of Transportation (Enforcement)	(**Night**) 1-800-759-7243 page #805 7850
Federal Railroad Administration	817-862-2200
6. US Department of Energy	
Radiological Assistance Team Region #4	505-845-4667*
Emergency Operations Center	202-586-8100*
Radiation Emer. Assistance Center/Trng. Site (REAC/TS) (FOR MEDICAL INFORMATION ON EFFECTS OF RADIATION EXPOSURE)	865-576-3131 865-576-1005*
7. Nuclear Regulatory Commission	
Operations Center	301-816-5100*
Region IV - Arlington, TX	817-860-8100*

Private Assistance

CHEMTREC (Operated by Chemical Manufacturers Assn.) 800-424-9300*

Provides immediate advice to emergency responders on fixed-site as well as transportation emergencies. CHEMTREC contacts shipper/ producer of the hazardous material(s) involved in the emergency for more detailed assistance and appropriate follow-up. CHEMTREC also maintains contact with the Chlorine Institute for access to the Chlorine Emergency Plan (CHLORREP) and with the Pesticide Safety Team Network (PSTN) operated by the National Agricultural Chemical Association.

*** 24 hours a day** **Updated August 2016**

APPENDIX 3

HAZMAT OPERATIONS
(Typical Site Layout)

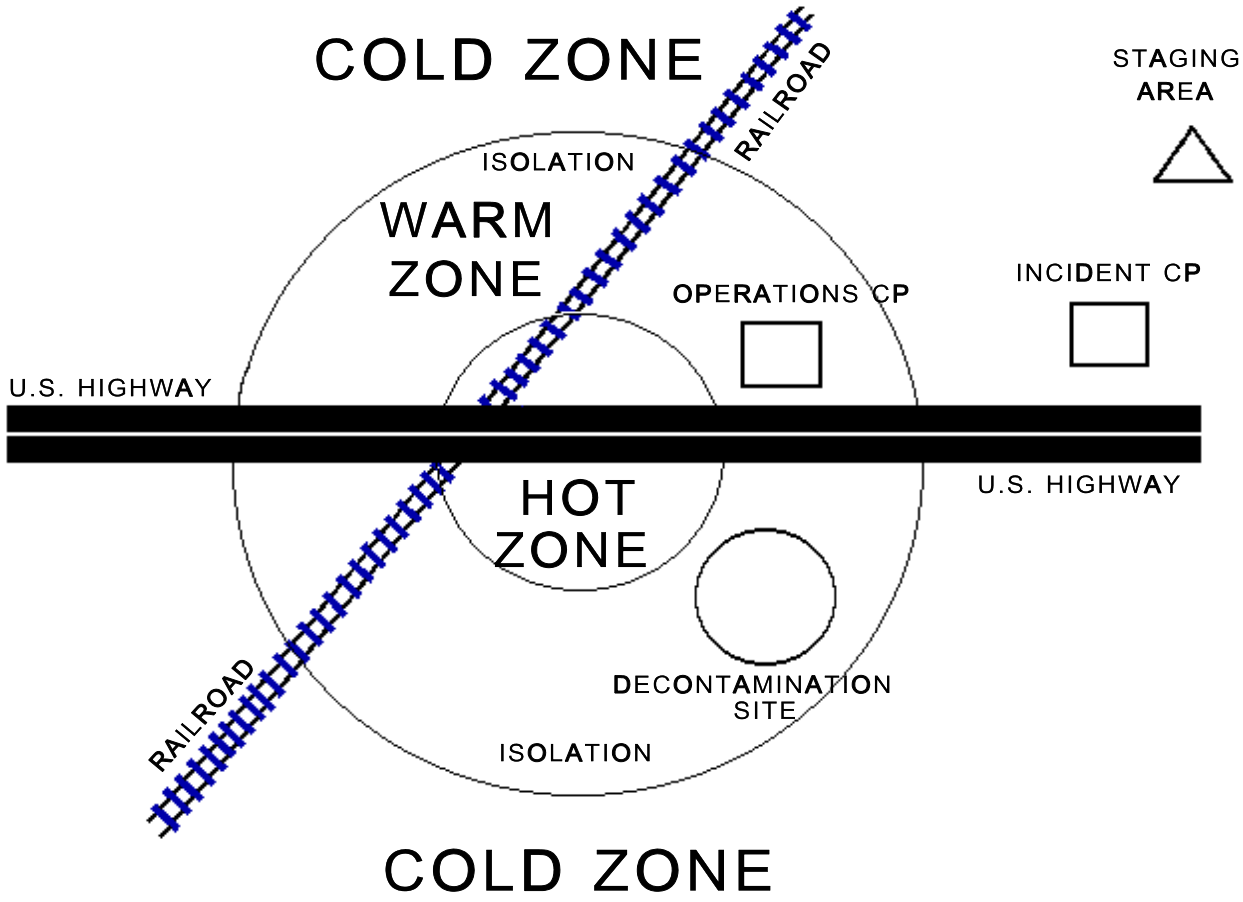

BLANK PAGE

ANNEX Q
HAZARDOUS MATERIALS

APPENDIX 4
General Characteristics and Examples of Hazardous Materials

***HAZARDOUS MATERIAL:* "any substance or material in any form or quantity which poses an unreasonable risk to safety and health and to property when transported in commerce."**

U.S. Classes and Divisions Based on UN System	U.S. Classess Pre January 1991	Examples of Materials by U.S. Classes and Division	General Hazard Properties (Not All Inclusive)
Class 1			
Division 1.1 - Explosive with mass explosion hazard	Class A Explosive	Dynamite, TNT, Black Powder	Explosive; exposure to heat, shock, or contamination could result in thermal and
Division 1.2 - Explosive with projection hazard	Class A Explosive/ Class B Explosive	mechanical hazards	
Division 1.3 - Explosive with fire, minor blast or minor projection hazard	Class B Explosive	Propellant Explosives, Rocket Motors, Special Fireworks	
Division 1.4 - Explosive device with minor explosion hazard	Class C Explosive	Common Fireworks, Small Arms Ammunition	
Division 1.5 - Very insensitive explosives	Blasting Agent	Ammonium Nitrate-Fuel Oil Mixtures	
Division 1.6 - Extremely insensitive explosives			
Class 2			
Division 2.1 (Flammable Gas)	Flammable Gas	Propane, Butadiene (inhibited) Acetylene, Methyl Chloride	Under pressure; container may rupture violently (fire and non-fire); may be a flammable, poisonous, a corrosive, an asphyxiant and/or an oxidizer, may cause frost-bite
Division 2.2 (Nonflammable, Non-poisonous Gas)	Nonflammable Gas	Carbon Dioxide, Anhydrous Ammonia	
Division 2.3 (Poisonous Gas)	Poison A	Arsine, Phosgene, Chlorine Methyl Bromide	
Class 3			
Flammable Liquid	Flammable-Liquid	Acetone, Amyl Acetate, Gasoline Methyl Alcohol, Toluene	Flammable; container may rupture violently from heat/ fire; may be corrosive toxic, and/or thermally unstable
Combustible Liquid	Combustible Liquid	Fuel Oils	
Class 4			
Division 4.1 (Flammable Solid)	Flammable Solid	Nitrocellulose, Magnesium Ribbon	Flammable, some spontaneously, may be water reactive, toxic, and/or corrosive; may be extremely difficult to extinguish.
Division 4.2 (Spontaneously Combustible material)	Flammable Solid and Liquid	Phosphorus, Pyrophoric Liquids and Solids	
Division 4.3 (Dangerous When Wet Material)	Flammable Solid and Liquid	Calcium Carbide, Potassium, Sodium	
Class 5			
Division 5.1 (Oxidizer)	Oxidizer	Ammonium Nitrate Fertilizer	Supplies oxygen to support combustion; sensitive to heat shock, friction, and/or contamination.
Division 5.2 (Organic Peroxide)	Organic Peroxide	Dibenzoyl Peroxide, Peroxyacetic Acid, Diacetal Peroxide Solution	
Class 6			
Division 6.1 (Poisonous Material)	Poison B Irritant ORM-A	Aniline, Arsenic Tear Gas Carbon Tetrachloride	Toxic by inhalation, ingestion, and skin and eye absorption; may be flammable.
Division 6.2 (Infectious Substance)	Etiologic Agent	Anthrax, Botulism, Rabies, Tetanus	
Class 7			
Radioactive Material	Radioactive Material	Cobalt, Uranium Hexafluoride	May cause burns and biologic effects energy and matter
Class 8			
Corrosive Material	Corrosive Material	Hydrochloric Acid, Sulfuric Acid, Sodium Hydroxide, Nitric Acid Hydrogen Fluoride	Disintegration of contacted tissues; may be fuming, water reactive.
	ORM-B	Unslaked Lime, Metallic Mercury	
Class 9			
Miscellaneous Hazardous Material	ORM-C ORM-E	Dry Ice, Molten Sulfur Adipic Acid, PCBs	
ORM-D	ORM-D	Consumer commodities	

Changes to 49 CFR parts 171-179 found in *Federal Register*, Vol. 55, No. 246, Friday, December 21, 1990

BLANK PAGE

APPENDIX 5

TRANSPORTATION ROUTES OF HAZARDOUS MATERIALS

No area of the county is exempt from being or becoming involved as a route for transportation of hazardous materials.

Maps on the locations of pipelines within the county and reports are filed with the Corporation Commission by the various corporations and companies. These are updated annually with the revision published by the Corporation Commission and distributed to all political subdivisions.

The official State of Oklahoma Road Map portrays federal and state highways, airports (public and private), and railroads which are all possible routes for the transport/delivery of hazardous materials. Maps of county roads are available at the county courthouse and the state Department of Transportation.

BLANK PAGE

ANNEX Q
HAZARDOUS MATERIALS

APPENDIX 6

PRINTOUT OF FACILITIES FILING TIER I OR TIER II
REPORTS AND REPORTED AS SUBJECT TO PLANNING
UNDER EPCRA

The following list (see attached pages) contains names of facilities, addresses, city/town, emergency contact, phone number, 24 hour emergency phone number, and date of last report to the Department of Environmental Quality (DEQ) for facilities that store, use or handle Extremely Hazardous Materials and Hazardous Materials in reportable quantities in the county. Facilities having or using sufficient quantities of Extremely Hazardous Substances (EHS) to be required by EPCRA to participate in the LEPC planning process are indicated by ATrue@ in the EHS update column.

This list can be obtained from

Tom Bergman, DEQ, Customer Service,
707 North Robinson,
Oklahoma City, OK 73102
(405) 702-1013.

BLANK PAGE

ANNEX R
TERRORISM PREPAREDNESS

I. PURPOSE.

This annex provides basic guidance for dealing with the mitigation of, preparedness for, response to, and recovery from any act of terrorism within the State of Oklahoma and specifically within the county.

II. SITUATION AND ASSUMPTIONS.

A. Situation.

1. The county has many potential terrorist targets. An attack on any of these targets has the potential for disrupting the community, causing major damage, and creating mass casualty situations.

2. Potential acts of terrorism which could occur in or around the county include but are not limited to political or industrial kidnapping, destruction of power and water plants, injecting communication viruses, air contamination, dam failure, fixed Hazardous Material (HAZMAT) facility destruction, highway HAZMAT incident, rural or urban fires and radiological incidents.

B. Assumptions.

1. As long as individuals or groups are dissatisfied with the activities of governments or religious organizations, they may commit terrorist acts to gain attention for their cause(s). These acts will target the innocent and will most often have a devastating effect on the community.

2. It is possible to prevent terrorists from being successful by promoting public awareness, training key personnel, and minimizing the effects of terrorist acts by recognizing the potential; then, taking necessary actions to safeguard the community.

III. CONCEPT OF OPERATIONS.

A. General.

In order to protect the communities from acts of terrorism, the County Emergency Manager, in conjunction with the County and City/Town Policy Groups must conduct a vulnerability analysis of all facilities, public and private. After identifying possible targets and their relationship to the community's day to day activities; it will then be possible to take measures to protect them.

B. Training.

1. Public awareness and training are key in the prevention of terrorism. Americans are creatures of habit and as such are easy targets for acts of terrorism. Anti-terrorism symposiums are necessary to alert the public that the threat is real. Minor adjustments to individual habits and lifestyles can play a major role in the prevention of terrorist acts.

2. Revision of departmental Standard Operating Procedures (SOPs) to incorporate anti-terrorism activities into mitigation, preparedness, response, and recovery operations.

3. Assist the private sector in preparing and conducting anti-terrorism training seminars for their employees, installations, and daily activities.

C. Exercises.

Policy groups and private sector leaders, with the assistance of the emergency managers, should conduct exercises as often as is deemed necessary to insure the following:

1. Existing SOPs are valid and workable and weaknesses have been identified and corrected.

2. Everyone understands their role and can accomplish what is expected of them.

3. All necessary safeguards are in place and all supporting activities have been properly identified and coordinated.

4. Everyone understands there is a potential for terrorist activity and they are prepared to cope with it.

IV. TASK ORGANIZATION AND RESPONSIBILITIES.

A. General.

Local Law Enforcement and Fire Service organizations have the lead responsibility for terrorism preparedness, response, and recovery activities. The Oklahoma State Bureau of Investigation (OSBI) is the primary state coordinating agency. Crime prevention and enforcement, and search and rescue operations are an extension of normal duties in terrorist situations.

B. Task Assignments and Responsibilities.

1. Emergency Management Director is responsible for:

a. Conducting and coordinating the assessment of the terrorism threat within the county and its cities/towns which includes identification of key assets (see attached list of facilities/assets and points of contact in Appendix 2).

b. Developing overall anti-terrorism awareness and prevention program and coordinating program implementation with local Policy Groups.

c. Coordinating and developing anti-terrorism awareness training programs with all agencies and departments with identified responsibilities.

d. Identify special considerations which apply to biological, chemical, radiological, and other areas that have unique activities.

e. Initiating scheduling and contracting training symposium facilities and facilitator per instructions of the Policy Groups.

f. Coordinating with local school administrators to insure plans and procedures are in place to protect staff, faculty, students and visitors are prepared for and protected during natural and man-made emergencies and disasters (see attached school procedures in Appendix 3).

2. County Sheriff/Local Police are responsible for:

a. Coordinating and assisting the Emergency Management Director in conducting the overall terrorism threat assessment with the county and identify key assets from a crime prevention stand point.

b. Making recommendations concerning access to facilities, security within site locations, and evacuation procedures.

c. Assisting in the development of the security and crime prevention portions of the training program.

d. Coordinating with other agencies/departments concerning response activities and responsibilities in the event of an attack.

3. Fire Department is responsible for:

a. Coordinating and assisting the Emergency Management Director in conducting the threat assessment with the county and identify key assets from an arson/fire suppression prevention standpoint.

b. Making recommendations concerning the evacuation plans, evacuation of facilities, safety and firefighting equipment positioning.

c. Assisting in the development of the fire prevention, warning procedures, and search and rescue portions of the training program.

d. Coordinating with other agencies/departments concerning response activities and responsibilities in the event of an attack.

e. Assisting the Emergency Manager in the development and conduct of public and private sector safety and on site first aid training.

4. County Maintenance/Public Works Department is responsible for:

a. Coordinating and assisting the Emergency Management Director in conducting the vulnerability assessment of key assets with the county.

b. Turning off electric and gas service if needed.

c. Debris clearance.

d. Providing engineering advice.

e. Maintaining roads and bridges.

f. Assisting with damage assessment of public property.

g. Assisting in radiological and biochemical decontamination operations.

5. County Health Department will:

a. Coordinate emergency hospital services with area hospitals and nursing facilities.

b. Provide victim identification and evacuation of the dead and injured.

c. Arrange for temporary mortuary services.

d. Investigate sanitation conditions and establishing safe standards for emergency shelter or disaster relief operations.

e. Inspect food and water supplies.

f. Coordinate medical support and epidemic control.

6. DHS County Office, when committed, is responsible for:

a. Providing provisions/funds for emergency aid.

b. Coordination with the Red Cross and other related agencies.

7. National Guard, when committed, is responsible for assisting in:

a. Radiological protection.

b. Law enforcement and traffic control.

c. Search and rescue operations.

d. Providing military engineer support and assistance in debris clearance.

e. Providing logistical support with supply, transportation, maintenance, and food service support.

f. Providing communication support.

8. State and Federal Support is responsible for:

a. Public welfare assistance.

b. Resources.

c. Law enforcement.

d. Health and medical.

e. Debris clearance.

f. Public information and education.

9. American Red Cross, when committed, is responsible for:

a. Providing reception, care, food, lodging and welfare assistance throughout the county.

b. Coordinating all personnel relief activities for any type disaster.

c. Operating shelters for disaster relief.

d. Providing damage assessment of private property.

e. Providing First Aid Support and blood supply to disaster relief

medical operations.

f. Providing counseling service.

10. Salvation Army is responsible for:

a. Supporting shelter/congregate care operations.

b. Providing field canteens.

c. Providing counseling service.

d. See Section IV, Basic Plan.

11. Ministerial Alliance/Church Volunteer Groups are responsible for:

a. Assisting with lodging, feeding and welfare operations in support of disaster relief or relocation.

b. Assisting with reconstruction efforts.

c. Providing volunteer manpower.

d. Providing counseling service.

12. Medical Service Providers are responsible for:

a. Emergency medical care for disaster victims.

b. Health care.

c. Crisis counseling.

V. DIRECTION AND CONTROL.

A. In the event of a terrorist attack, the Emergency Management Director will report to and activate the EOC, notify the Policy Group, and call in the Coordinating Group, and Operating Staff. The Emergency Management Director will notify the State EOC Duty Officer of the incident.

B. The Sheriff, or his representative, will report to the EOC. Law enforcement personnel will report to the incident location and immediately perform required law enforcement tasks in accordance with applicable standard operating procedures.

C. The Fire Chief, or his representative, will report to the EOC. The Fire Chief, or his representative, will establish an Incident Command Post and begin Search and Rescue, and

Fire Suppression operations.

D. The County Maintenance Foreman/Public Works Director will report to the EOC and initiate action to have any gas lines or electrical power shut down as reported by the Incident Commander.

E. The County Health Director, or his representative will report to the EOC and alert medical care facilities.

VI. ADMINISTRATION AND LOGISTICS.

A. Emergency Authority.

See Section VII, Basic Plan

B. Passes.

In the event of a terrorist attack within the county, the pass system described in Annex I will be employed for operational, safety and security reasons.

C. Reports and Records.

Operational records and reports will be compiled as deemed necessary by the Policy Group and their safeguard shall be the responsibility of the Emergency Manager.

VII. PLAN DEVELOPMENT AND MAINTENANCE.

A. The contents of this annex must be known and understood by those people responsible for its implementation. The County EM Director is responsible for briefing staff members and county officials concerning their role in emergency management and the contents of this annex.

B. The Policy Group will ensure an annual review of this annex is conducted by all officials involved in its execution. The EM Director will coordinate this review and distribute changes to the annex.

APPENDIX

APPENDIX 1 - Bomb Threat Checklist
APPENDIX 2 – Critical Facilities/Assets
APPENDIX 3 – School Emergency Standard Operating Instructions

BLANK PAGE

ANNEX R
TERRORISM PREPAREDNESS

APPENDIX 1
BOMB THREAT CHECKLIST

1. Keep the caller on the phone as long as possible.

2. Write down the contents of the conversation.

3. Have another person call the Law Enforcement at __911_____-_____.

4. Do not hang up the receiver of your phone.

5. Notify your supervisor or employer.

6. Time: _____ Date: _____

7. Caller's Exact Words:

8. Note any specific recognizable background sounds (Trains, announcement, etc)

QUESTIONS YOU SHOULD ASK:

a. When is the bomb going to explode?

b. What is the location of the bomb?

c. What does the bomb look like?

d. What kind of bomb is it?

e. Why did you place the bomb?

f. Where are you calling from?

g. What is your phone number?

Describe the caller's voice: Check all that apply.

Loud __Low Pitch __ Fast __ Soft __ High Pitch

Slow __ Deep __ Distinct __ Pleasant __ Distorted

Intoxicated __ Disguised __ Stuttered __ Nasal

Language Excellent __ Good __ Fair __ Tapped

BLANK PAGE

ANNEX R
TERRORISM PREPAREDNESS

APPENDIX 2 – CRITICAL FACILITIES/ASSETS

May be Sensitive Information –

BLANK PAGE

APPENDIX 3 – SCHOOL EMERGENCY STANDARD OPERATING INSTRUCTIONS

BLANK PAGE

ANNEX S
SAMPLE MUTUAL AID AGREEMENTS

"SAMPLE #1"

This Mutual Assistance Agreement is entered into as hereinafter set forth by and between the City/Town of _____, a municipal corporation organized and existing under the laws of the State of Oklahoma (hereinafter also referred to as "Party of the First Part") and the City/Town of _____, a municipal corporation organized and existing under the laws of the State of Oklahoma (hereinafter also referred to as "Party of the Second Part").

WHEREAS, 74 Okla Stat. ' 1008 and 11 Okla. Stat. ' 29-105 authorizes this Agreement and each entity is securing the benefits of mutual aid in the protection of life and property from fire, and in fire fighting.

NOW, THEREFORE, the parties agree to the following provisions:

TERM

1. This Mutual Assistance Agreement entered into by and between the Party of the First Part and the Party of the Second Part shall be effective on the 1st day of _____, 20__, and continue until _rescinded.

2. On request to an authorized representative of the Party of the Second Part Fire Department (FD) by an authorized representative of the Party of the First FD, firefighting equipment and personnel of the Party of the Second Part FD will, if available, be dispatched to any location, as designated by the representatives of the Party of the First Part FD, within the area for which the Party of the First Part normally provides fire protection.

3. On request to an authorized representative of the Party of the First Part FD by an authorized representative of the Party of the Second FD, firefighting equipment and personnel of the Party of the First Part FD will, if available, be dispatched to any location, as designated by the representatives of the Party of the Second Part FD, within the area for which the Party of the Second Part normally provides fire protection.

4. Any dispatch of equipment and personnel pursuant to this Agreement is subject to the following conditions:

A. Any request for aid hereunder shall include a statement of the amount and type of equipment and personnel requested, and shall specify the location to which the equipment and personnel are to be dispatched but the amount and type of equipment and number of personnel to be furnished shall be determined by a representative of the responding organization.

B. The responding organization shall report to the officer in charge of the requesting organization at the location to which the equipment was dispatched, and shall be subject to the orders of that official. In the event a request is made to respond to a location where the requesting FD is not present when the responding organization arrives at the scene, then the responding organization shall be in charge and shall take any necessary steps to handle the fire.

C. A responding organization shall be released by the requesting organization when the services of the responding organization are no longer needed within the area for which

the requesting organization normally provides fire protection, as determined by the authorized representative of the requesting organization.

D. Each party waives all claims against the other party for compensation for any loss, damage, personal injury, or death occurring as a consequence of The performance of the Agreement.

E. All equipment used by the Party of the First Part FD and Party of the Second Part FD in carrying out this Agreement will, at the time of action hereunder, be owned by or under the jurisdiction of the Party of the First Part FD and the Party of the Second Part FD, respectively; and all personnel acting for the Party of the First Part and the Party of the Second Part under this Agreement will, at the time of such action, be an employee or volunteer member of their respective FD.

BILLING PROCEDURES

5. The Parties will not bill any fires/emergencies/disasters within the fire response area unless the fire, emergency or disaster exceeds the capabilities of the effected jurisdiction and state and/or federal aid or resources are received. If state and/or federal aid or resources are received by the effected jurisdiction, the responding FD may receive comparable reimbursement as if it were a component of the effected jurisdiction's FD.

TERMINATION

6. This Agreement may be terminated at any time by either party with or without cause upon tendering in writing, notice of such termination thirty (30) days prior to the effective date of such termination.

NO THIRD PARTY BENEFICIARIES

7. It is not the intent of the Mutual Assistance Agreement to create any rights in any third parties.

AUTHORIZED REPRESENTATIVES

8. The Chief of the Fire Department of each entity shall be an authorized representative of said Department and may designate such subordinates in his Department as he determines necessary to act as authorized representative in his absence. Each Chief shall provide his counterpart with a list of authorized representatives and phone numbers for contact purposes.

NOT ASSIGNABLE

9. This Agreement is not Assignable except upon the prior written consent of all parties hereto.

EXECUTE

10. This Agreement shall be executed in quadruplicate, each copy of which shall be as an original.

EFFECTIVE

11. The effective date of this Agreement shall be upon execution hereof by the last party thereto.

AMENDMENT

12. This Agreement may not be amended except by express written agreement of all parties hereto.

CAPTIONS

13. The captions, titles, and headings contained herein are for convenience of reference only and shall not control the interpretation of any provision hereof.

INTERPRETATION

14. When any word in this Agreement is used in the singular number, it shall include the plural, and the plural, the singular, except where a contrary intention plainly appears. When any word in the Agreement is used in the masculine, it shall include the feminine, and the feminine, the masculine, except where a contrary intention plainly appears.

PRESERVATION OF DEFENSES AND RIGHTS

15. Neither party hereto waives any defenses or rights available pursuant to the Governmental Tort Claims Act at 51 O.S. ' 151 et. seq., common law, statutes, or constitutions of the United States or the State of Oklahoma by entering into this Agreement.

WHOLE AGREEMENT

16. It is mutually understood and agreed by the parties hereto that this Agreement contains all of the covenants, stipulations and provisions agreed upon by said parties and no agent or other party to this Agreement has authority to alter or change the terms hereof, except as provided herein, and no party is or shall be bound by any statement or representation not in conformity herewith.

RENEWAL

17. This agreement is in effect until rescinded by county or city resolution..

APPROVED this __ day of _____, 20__, by the City/Town of_____.

THE CITY/TOWN OF

MAYOR

ATTEST: (seal)
_____CITY CLERK

APPROVED this __ day of _____, 20__, by the City/Town of_____.

THE CITY/TOWN OF

MAYOR

ATTEST: (seal)
_____ CITY CLERK

APPROVED as to form and legality this_____day of_____, 20__.

CITY/TOWN ATTORNEY FOR THE CITY/TOWN OF

BLANK PAGE

"SAMPLE #2"

THIS AGREEMENT, entered into this _____ day of _____ , 20___, by and between the cities, towns, counties, other government entity of the State of Oklahoma, as set forth in EXHIBIT A.

WITNESSETH:

I. DURATION

This agreement shall be in full force and effect and binding upon the parties hereto upon the execution of this agreement and shall continue in full force and effect for a period of two (2) years. At the end of the two (2) year period this agreement shall continue in force on a year to year basis, for an indefinite term, until terminated by the parties. Any party desiring to terminate or modify this agreement shall notify each party of this intent in writing ninety (90) days before the date upon which the party intends to withdraw or request changes in this agreement.

II. PURPOSE

The parties hereto, by their respective governing bodies, hereby find and declare;

(1) WHEREAS, the cities/counties/town/other government agency, parties, to this agreement, desire to provide aid and assistance to same cities/counties/towns/other government agencies in times of disaster or casualty to their governmental systems; and

(2) WHEREAS, the parties, hereto, individually and collectively are in danger of and susceptible to disasters, including but not limited to fire, flood, tornadoes, and other acts of God; and

(3) WHEREAS, it would be for the mutual benefit and advantage of all concerned to counter disaster, casualty or other calamities through greater cooperation, pooling of resources, and the exchange of expertise and manpower.

(4) WHEREAS, each Fire Department, government entity/agency shall provide mutual aid assistance to the requesting agency except when;

in the opinion of the Fire Chief or Ranking Officer, it is impossible to do so on account of other possible fires or situations with in its own City or area, broken apparatus, manpower conditions, dangerous highways or other limiting conditions.

(5) WHEREAS, it is understood and agreed by all parties of this agreement that the agency requesting assistance will be the agency in command of the situation and that the ranking officer from the agency providing mutual aid assistance will remain in charge over that agency's manpower and equipment.

III. LIABILITY

It is agreed that each party of this agreement will provide and/or continue in full force its own workmen's compensation coverage and retirement benefits of that agency (if provided by the agency) while their employees are providing mutual aid assistance.

It is further agreed that nothing in this agreement shall be construed to impose civil liability on the requesting agency, who acts in good faith and without malice, for or on account of injury and/or damages resulting to men or equipment of the assisting agency.

It is understood and agreed that the assisting agency or any of that agency's employees providing mutual aid assistance while acting in good faith and without malice, shall not render themselves liable and are hereby relieved of all liability for or on account of injury and or damages resulting to men or equipment of the requesting agency.

EXHIBIT A

1. CITY OR TOWN OF:_____

MAYOR:_____

FIRE CHIEF:_____

ATTEST:_____

CITY CLERK

_____
DATE

2. CITY OR TOWN OF:

MAYOR:

FIRE CHIEF:

ATTEST:

CITY CLERK

_____
DATE

3. CITY OR TOWN OF:_____

MAYOR:_____

FIRE CHIEF:_____

ATTEST:_____

CITY CLERK

_____
DATE

4. CITY OR TOWN OF:

MAYOR:

FIRE CHIEF:

ATTEST:

CITY CLERK

_____
DATE

5. CITY OR TOWN OF:_____

MAYOR:_____

FIRE CHIEF:_____

ATTEST:_____

CITY CLERK

_____
DATE

6. CITY OR TOWN OF:

MAYOR:

FIRE CHIEF:

ATTEST:

CITY CLERK

_____
DATE

DURANT REGIONAL AIRPORT – EAKER FIELD
EMERGENCY PLAN

Table of Contents

Basic Plan 2
Purpose 2
Introduction 2
Basic Assumptions 2
Organization and Assignment of Responsibility 2
Administration and Review 4
Functional Areas 5
1. Command and Control 5
2. Communication 5
3. Alert Notifications and Warning 5
4. Emergency Public Information 6
5. Protective Actions 6
6. Law Enforcement 6
7. Firefighting and Rescue 6
8. Health and Medical Services 6
9. Resource Management 7
10. Airport Operations and Maintenance 7
Standard Operating Procedures and Checklists for Specific Hazards 8
Airport Access 8
Hazard 1: Aircraft Incidents and Accidents 9
Hazard 2: Natural Disasters 14
Hazard 3: Bomb Incidents/Terroristic Threats 16
Hazard 4: Hazardous Materials Emergencies 18
Hazard 5: Structural Fires 19
Hazard 6: Failure of Utilities 21
Hazard 7: Missing Aircraft 23
Post-Incident Procedures 24
Attachments 26
Bomb Threat Form 27
Aircraft Incident Report 28
Missing Aircraft Form 29
Airport Map 30

Basic Plan

Purpose

The purpose of this plan is to ensure the safe and efficient handling of any emergency situation that may arise at Durant Regional Airport - Eaker Field. It is intended to assist the Airport Manager, airport staff, and emergency organizations with carrying out their responsibilities efficiently in case of an airport emergency.

Introduction

We recognize that all emergency situations cannot be anticipated. If an emergency situation arises that is not covered in this plan, the Airport Manager has the authority to direct such actions as he or she may deem necessary.

This plan was approved and adopted on September 4, 2012.

Airport Emergency Plan Coordinator

The coordinator of this plan will be the Airport Manager or his or her designated representative, who will be responsible for the administration and review processes of this plan and who will ensure full implementation of these procedures during any emergency or disaster condition. Emergency response will vary depending on hazard-specific conditions as contained herein, and Incident Command will be established consistent with City of Durant emergency response procedures and National Incident Management System (NIMS) guidelines.

Basic Assumptions

In developing this plan, we considered the following:

- How best to work together as a team and use the resources of the city, county, and airport.
- How to manage communications at the airport during an emergency.
- How to hand off control as the availability of staff and the nature of the emergency changes.
- How to coordinate radio frequencies so that all emergency responders can communicate effectively with each other.
- Where to go during an emergency.
- How to inform tenants and other airport users about the emergency.
- How to restrict access and control bystanders during an emergency.

Organization and Assignment of Responsibility

The individuals and agencies that have a role in an emergency at the Durant Regional Airport are listed in Table 1. This list is not meant to be all-inclusive in terms of the agencies or individuals involved, as others may be needed.

For Table 1, describe what each person or agency is responsible for during airport emergency situations. Who do these people report to? What are their responsibilities? Also list specific emergencies or hazards that may be encountered and how each will be addressed, providing name and contact information for each person(s) responsible for the initial and secondary responses. Note the sections on Hazard Identification included in this template.

Table 1. Airport Emergency Responsibilities

Position or Description	Responsibilities for Airport Emergency
Dewayne Williams Airport Manager	• Serve as Emergency Coordinator.* • Assume Incident Command responsibility for all response and recovery operations, as appropriate. • Establish, promulgate, coordinate, maintain, and implement the Airport Emergency Plan (AEP). • Contact 911 and provide appropriate alerts and notifications. • Coordinate the closing of the airport when necessary and initiate the dissemination of relevant safety-related information to aviation users (NOTAMs).
Air Carrier/Aircraft Operator	• Provide full details of aircraft-related information, as appropriate, to include number of persons, fuel, and dangerous goods on board. • Coordinate transportation, accommodations, and other arrangements for uninjured passengers. • Coordinate use of air carrier/aircraft personnel and other supplies and equipment for all types of emergencies occurring at the airport.
Durant City Manager	Provide access to city resources.
Roger Joines, Chief Durant Fire Department	• Manage and direct firefighting and rescue operations. • Direct search and rescue or hazardous materials response. • Coordinate mutual aid resources through Incident Command System. • Assist with search and rescue or evacuations. • Assume Incident Command as appropriate.
Durant Police Chief Durant Police Department	• Manage and direct police operations. • Assist with traffic control and scene security. • Assist with search and rescue or evacuations. • Respond as needed for activities involving crowds or assemblies of people. • Respond to bomb threats or acts of terrorism. • Assume Incident Command as appropriate.
James Dalton Emergency Management Director	• Assist airport with obtaining all resources offered by the state or federal governments. • Assist the county in obtaining any state or federal government resources that may be needed as a result of an emergency situation.

Joe Barrett Brian Norton Bryan County EMS	• Provide emergency medical services to the airport during emergency conditions to include triage, stabilization, first aid, medical care, and transportation of the injured. • Coordinate planning, response, and recovery efforts with hospitals, fire and police departments, airport operator, etc. • Coordinate the hospital disaster plan with the airport and community Emergency Operations Plan (EOP).
Tenants and FBOs	• Coordinate the use of their available equipment and supplies. • Coordinate the use of their workers. The tenants usually have information about the airport, aircraft, and other technical knowledge.
Durant Public Works Department	• Coordinate use of resources for debris removal or building maintenance. • Coordinate restoration of utilities. • Provide equipment for emergency response and recovery.

**Note: In the absence of the Airport Manager, an airport staff person will serve as the Emergency Coordinator until the Airport Manager is on-site.*

Administration and Review
The Airport Manager is responsible for reviewing this document every 12 months and making recommendations for updates and changes to Durant/Bryan County Emergency Management. As part of this review, local emergency and medical personnel will conduct a tabletop exercise to assist with identifying needed changes every 12 months. At least once every three years, the Emergency Management will conduct a full-scale emergency plan exercise. Emergency plan reviews and exercises will involve all of the agencies that have responsibilities in the execution of the emergency plan.

In the event of a major emergency or disaster that exceeds the resources and capabilities of the airport, and which requires immediate state and/or federal assistance, the Oklahoma Emergency Management Duty Officer may be contacted at the following phone number:

- 800-800-2481

Functional Areas

This section provides information on tasks and core responsibilities that may be applied to all airport emergencies. Detailed information particular to specific emergency situations is found in the standard operating procedures for hazard-specific areas.

Note: Many general aviation airports do not have enough staff to designate an individual to cover each function. FAA Advisory Circular 150/5200-31C recognizes this and states that in many instances these roles may need to be combined or may include off-airport expertise.

1. Command and Control

Command and control of an airport emergency situation will vary depending on the type of emergency and the response required. The Incident Command System (ICS) will be utilized consistent with City of Durant emergency procedures.

In case of emergency, the Airport Manager will be the main point of contact for the duration of the incident with respect to the implementation of this plan in coordination with Incident Command.

The Durant/Bryan County Emergency Management office , located at 2808 Enterprise Blvd, will be the first choice for the Emergency Operations Center (EOC).

The Durant/Bryan County Emergency Management Director will assist in providing resource coordination between government agencies and the private sector as needed per Incident Command.

2. Communication

Primary communication for responding agencies will be through the use of communication radios using Bryan County emergency frequencies.

In the event secondary communications are needed, equipment may include electronic communications, cell phones, amateur radio, or secondary City of Durant communication equipment.

The Durant Regional Airport uses the following civil aviation band frequencies:
122.8 (CTAF) 124.17 (AWOS).

3. Alert Notifications and Warning

The airport manager, representative, or airport tenants will be responsible for initiating a 911 call in the event of an emergency.

Note: Notifications regarding airport emergencies may also be reported by the general public in some cases.

The Airport Manager will coordinate with Incident Command to notify the appropriate aviation agencies. Incident Command will be responsible for ensuring that notifications are made to protect the general public.

The Airport Manager will notify the appropriate key City of Durant officials and private organization officials.

Dispatch of emergency personnel will be the responsibility of the Bryan County Communications center after alert notification is received.

4. Emergency Public Information

Airport management will coordinate with Incident Command to ensure actions are taken to protect the public in the event of an emergency. Instructions will be delivered to the public through the following methods:
Blackboard Connect (reverse 911)
Local radio and television media

Incident Command may assign a public information officer (PIO) to work within the Incident Command System (ICS) and coordinate public information.

Media briefings will be coordinated through Incident Command and the PIO per implementation of the media plan on page 23.

5. Protective Actions

The Airport Manager will coordinate with Incident Command to ensure actions are taken to protect the public in accordance with procedures for Durant/Bryan County emergency management.

Evacuation/protect-in-place procedures will be coordinated through Incident Command. The Airport Manager will work through the ICS to assist with evacuations of airport buildings. In the event of a tornado, the public will be directed to the underground storm shelter on the north side of the terminal building.

6. Law Enforcement

Law enforcement agencies, including Durant Police Department and Bryan County Sheriff Department, will ensure the availability of sufficient numbers of qualified and trained law enforcement personnel to support an airport emergency. Law enforcement will coordinate multijurisdictional law enforcement response and any required mutual aid.

Law enforcement will establish security for all airport emergency scenes including the control of traffic control points and access. Law enforcement agencies will assume Incident Command for situations involving bomb threats or terrorism and coordinate with Incident Command for all other emergencies.

7. Firefighting and Rescue

The Durant Fire Department will ensure the availability of sufficient numbers of qualified and trained personnel to support an airport emergency.
The Durant Fire Department will coordinate appropriate response and recovery operations including any mutual aid needed.

Fire department personnel will assume Incident Command for all fire suppression operations or coordinate with Incident Command.
Oklahoma Highway Patrol will assume Incident Command for search and rescue operations or coordinate with Incident Command.

8. Health and Medical Services

The Bryan County EMS will provide emergency medical services to include triage, stabilization, first aid, medical care, and the transportation of the injured to the airport during an emergency. The Bryan County Ambulance Service Director or Deputy Director will be responsible for ensuring that the coordination of any other mutual aid agency is accomplished through Incident Command.

Hospital: Medical Center of Southeastern Oklahoma 580-924-3080

EMS: Bryan County EMS Call 911 for an emergency

The following are pre-determined areas that may be utilized at the discretion of Incident Command for uninjured, injured, and deceased:

1) Apron north of the terminal building.
2) Inside the large hangar north of the terminal building.
3) Inside the FBO hangar.

9. Resource Management

Incident Command will be responsible for ensuring that the appropriate resources are obtained for the emergency situation including response and recovery operations. The following is a list of resources to support potential emergencies:

Durant Public Works Department
Durant/Bryan County Emergency Management
Civil Air Patrol

Each agency, department, or service of City of Durant government will provide for the maintenance of records during an emergency. These records should include work hours, equipment hours, supplies and materials consumed, injuries to personnel, and damage to public facilities and equipment. This information will be provided to the finance section of the ICS when applicable.

10. Airport Operations and Maintenance

The Airport Manager or representative will be responsible for the control of the airport during an emergency. The Airport Manager will determine if the airport needs to be closed. If the airport is closed, he or she will ensure that yellow X's for runway closure are placed as appropriate.

The Airport Manager or representative will be responsible for issuing NOTAMs for airport conditions and closures as well as any required coordination with air traffic control facilities. The Airport Manager or representative will make the appropriate notifications to all airport tenants. A contact list of all tenants is included in the airport emergency kit.

The Airport Manager will coordinate airport operations with Incident Command as required and make available all necessary equipment and facilities.

Standard Operating Procedures and Checklists for Specific Hazards

This section focuses on the special planning needs and hazards particular to airports. It addresses the essential operational actions needed to help successfully complete a specific response function. Some
hazards that may require a response are:

- Aircraft incidents and accidents
- Natural disasters
- Bomb incidents
- Hazardous materials incidents
- Structural fires
- Failure of power
- Missing aircraft

This section also includes detailed instructions and checklist information for hazard-specific sections and the airport map.

Note: Hazard-specific sections should include response and recovery procedures particular to a specific type of emergency. Types of emergencies to include in this section are determined on a case-by-case airport hazard analysis for individual airports. This template includes examples of common types of emergencies to address in an AEP.

Airport Access

The following key staff will have access to the gate code:

Airport Manager
Durant Police Chief
Durant Fire Chief
Durant/Bryan County Emergency Management
Durant City Manager

Hazard 1: Aircraft Incidents and Accidents

Definition and Classification of Incidents and Accidents

Aircraft accident: Any occurrence associated with the operation of an aircraft that takes place between the time a person boards the aircraft with the intention of flight and the time such person has disembarked, in which a person suffers death or serious injury as a result of the occurrence or in which the aircraft receives substantial damage.

Aircraft incident: Any occurrence associated with the operation of an aircraft that is not considered an "aircraft accident."

Incident Classification System

Level 1: An accident *may* happen. For example, there is a landing gear problem, or a situation or emergency exists or is perceived to exist that may result in an incident or accident. This includes situations where it is unknown if an incident or accident emergency has actually occurred.

Level 2: An aircraft is known or suspected to have an operational defect that affects normal flight operations to the extent that there is danger of an accident.

Level 3: An aircraft accident has occurred on or in the vicinity of the airport.

Emergency Contact Information

City of Durant Fire/Police Departments:	911
Airport Manager:Dewayne Williams	Cell: 580-230-1188 Dad:580-230-1600
NOTAM:	1-877-487-6867
FAA Fort Worth Operations Center: FAA After Hours (the FAA will contact NTSB)	817-222-4455 817-222-5066
Other airport staff:	
Justin Williams	Cell: 580-230-7862
Van Ellis	Cell: 580-380-0610
James Young, Street Department:	Cell: 580-775-2486
City Manager	Work:580-931-6605

Alert Notification and Warning
Once it has been determined that a potential or actual airport/aircraft emergency exists, all parties listed under Emergency Contact Information should be notified by the Airport Manager or, in his or her absence, the primary point of contact. After making phone calls in the order listed below, the Airport Manager or his or her representative should remain by the phone to direct responders and answer questions.

Note: The Airport Manager may have other response duties depending on level of training and/or local procedures and may not be able to remain by the phone.

Level 1 Classification Response
The fire department personnel should be advised of the following information if known:

- Type of aircraft
- N-number
- Type and amount of fuel
- Number, or potential number, of passengers and crew
- Nature of emergency
- Type and/or amount and location of cargo
- Number of passengers on board
- Location of aircraft

Level 2 Classification Response
Fire department personnel should be provided with the same information as above plus any additional details that will allow preparation for likely contingencies. Fire/police dispatch should advise airport staff of the applicable fire department radio talk group or provide a radio patch to facilitate efficient response coordination. A full response should be made with the emergency equipment operating and positioned with engines running and all emergency lights operating, enabling rapid response to the incident/accident site.

1. Standby locations on the Durant Municipal Airport should be accessed through the gates by the arrival/departure building, and responding units should position themselves in such a manner as to have a clear view of the runway and taxiways. The person in charge of response equipment (fire department) should anticipate the aircraft's rollout and station emergency response vehicles some distance upwind from the rollout area.

2. Communication with the aircraft by airport staff should be made if possible (on Unicom frequency 122.8 or the emergency frequency 121.5) and passed to the fire department. This provides a safety factor for rollout; should an emergency require it, the vehicle could be on the move to the aircraft stopping point from an upwind direction.

3. The fire department vehicle will move on a fast parallel course to the aircraft once it is apparent that the aircraft is going to pass the standby position.

Level 3 Classification Response
Full fire department procedures should be put into effect. All pertinent updated information should be relayed by the airport staff and/or dispatching agency to responding emergency units and include the location of the accident using direction and distance from the arrival/departure building, thresholds, mid-field, street/road intersections, or landmarks.

When complete aircraft-related information is unavailable, the fire department personnel should anticipate the worst situation and prepare accordingly.

Notify the FAA Operations Center of conditions at the site, particularly if such conditions could interfere with flight operations. Airport staff should issue applicable NOTAMs and ensure appropriate Unicom advisories are communicated. Note that all NOTAMs should specify if the airport will remain open for emergency aircraft.

Recovery

Preservation of wreckage

If the accident involves personal injury or death, the wreckage CANNOT BE MOVED OR DISTURBED except for emergency extrications, to protect the wreckage from further damage, or to protect the public from injury. Incident Command should ensure the preservation of wreckage until otherwise authorized by the FAA duty officer (see Emergency Contact List) or until the appropriate governing agency takes custody of or releases the wreckage.

Following FAA approval, the wreckage may be moved away from the runway/taxiways or accident scene to facilitate the timely reopening of the airport. The aircraft owner is responsible for removing or making arrangements to remove the damaged aircraft. City of Durant public works may assist in this recovery process in the interest of time.

Following removal of the wreckage, the Airport Manager will inspect the runway/taxiway pavement and surrounding surfaces for damage and debris, and, if satisfactory, the airport may be reopened to air traffic. If the runway is closed, X's should be placed at each end.

The city will bill all costs for the recovery and removal of aircraft from the operational areas of the airport to the owner/operator of the involved aircraft.

Public Information

Airport personnel or other city personnel should avoid making any statements to the news media during an emergency situation at the airport or aircraft accident scene unless previously directed. The Airport Manager and a representative from the FAA or NTSB will normally serve as the public information officer (PIO). Any city employee with questions about media inquiries will refer the media to the PIO.

Organizational Response and Responsibilities

Airport Staff

- Locate the aircraft owner/operator if pilots or passengers are unable to communicate.
- Check with the FBO for any parties that might have been waiting for or associated with the aircraft.
- Check with the FAA operations center to determine if a flight plan exists for the aircraft and obtain related pilot and owner information.
- If the aircraft tail number is readable or known, use the Internet to quickly determine the owner/operator at www.landings.com:
    1. Click on "Databases" at top of screen.
    2. Click on "A/C Registration US" (if of U.S. registry, N-number database).
    3. Click on "Basic Search."
    4. Type in aircraft's tail number.
    5. Click on "Send Query."
- Complete airfield inspections and documentation.

- Issue appropriate NOTAMs.
- Cooperate with investigations.

The Airport Manager will notify appropriate officials, assist with the investigative process, and provide documentation, including the Airport Incident Report form.

Airport Fixed-Base Operators (FBO)

- Provide the specific or best estimate of location on or near the airport or closest intersection, landmark, etc., of the emergency.
- Call 911 (police/fire dispatch).
- State the "ALERT/Emergency Level." Provide information from the description of Readiness Levels.
- Make a Unicom advisory call (122.8) if there's a danger to other aircraft.
- Contact airport staff.
- Contact SOSU Aviation Department at 580-745-2717.
- Stand by to direct firefighters or EMS to the accident site.

Fire Department

Fire department personnel on the scene will assume Incident Command and will direct all efforts of fire suppression and rescue of individuals involved in the incident. The Incident Commander will assess the situation and ensure that adequate equipment is available for rapid fire suppression, rescue of victims, and transportation of victims to area hospitals. The scene Incident Commander will maintain contact with the Airport Manager.

Fire/police dispatch should advise airport staff of the applicable fire department radio talk group or provide a radio patch to facilitate efficient response and coordination (e.g., directions to the emergency site, recommended access gate).

Police Department/Department of Public Safety

- Secure the area and ensure the free flow of emergency equipment into the incident scene.
- Handle crowd control, site security, and control of ingress and egress to the incident scene by authorized personnel.
- Assist firefighters in the suppression of fire and rescue of victims if requested by the Incident Commander.
- Treat the accident/incident scene as a major crime scene and secure as such.

Public Works Department

The public works department will respond to any serious aircraft or airport incident as directed by Incident Command. The Director of Public Works will assist the Airport Manager in returning the airport to normal operations in an expeditious manner. The Director of Public Works will coordinate with Incident Command and assist in and supervise the recovery, removal, or salvage of property that creates a problem on the airport and restricts aircraft operations. This will include the removal of aircraft and hazardous debris on runways and taxiways. The public works department may respond with the initial equipment necessary to accomplish its mission, such as:

- Front-end loader
- Dump truck
- Flatbed trailer

- Sweeper
- Adequate cables and ropes to move an aircraft
- Support equipment (e.g., barricades, cones, and lighting systems for night recovery operations)

Airport Tenants
Airport tenants and their employees should be considered a prime source of readily available equipment and labor and may have an intimate knowledge of the airport and the aircraft. These individuals can be invaluable, especially if their background includes aircraft maintenance, medical training, or aircraft transportation. If utilized, on a voluntary basis only, it is imperative that these individuals be deployed under supervision and assigned specific functions to avoid duplication of efforts and the possibility of disrupting the other emergency operations.

Emergency Medical Services (EMS)
EMS will provide emergency medical services to include triage, patient care, and transport. EMS will coordinate with Incident Command for any required mutual aid.

Hazard 2: Natural Disasters

In the event of a natural disaster such as a tornado, hailstorm, flooding, severe thunderstorm, or high wind, the Bryan County Hazard Mitigation Plan will be followed.

Emergency Contact Information

City of Durant Fire/Police Departments:	911
Airport Manager: Dewayne Williams	580-230-1188
NOTAM:	877-487-6867
Public Works:	580-775-2486

Alert Notifications and Warning
All parties listed under Emergency Contact Information should be notified. The general public will be warned of severe weather through sirens, radio, etc.

Response
If time allows:

1. Notify airport tenants of the threatening condition.
2. Advise aircraft owners and pilots so they can depart the airport ahead of the condition or secure their aircraft properly.
3. Survey the airport for unsecured objects that may become projectiles in high winds or be damaged by floodwaters.
4. Move aircraft to safe areas (hangars) or position and secure as best as time allows.
5. Stop fueling operations when lightning is observed in the vicinity.
6. Secure airfield lighting as necessary to protect from flood damage.
7. Lower or remove the windsock.
8. Issue a NOTAM advising of airport conditions.

The designated storm shelter area will be the underground storm shelter on the north side of the terminal building.

If required:

- Have Incident Command activate the Emergency Operations Center (EOC), located at 2808 Enterprise Blvd, to coordinate any airborne emergency relief.
- Coordinate with all military and relief flight operations for the orderly flow of air traffic.
- Designate unloading areas and the movement from the airport of relief supplies.
- Provide current weather and airport status information to the city manager, police chief, fire chief, emergency management staff, and utility departments.
- Depending on the severity of the situation, the EOC may be activated at the discretion of Incident Command. Durant/Bryan County Emergency Management will assume Incident Command. Airport management will work within the ICS and procedures of Durant/Bryan County Emergency Management for severe weather events.

Recovery
The Airport Manager or point of contact will call the local utility companies to arrange restoration of services. The Airport Manager should use available equipment and labor, with assistance from the utility departments, to return the airport to an operational condition as soon as possible. This will ensure an additional avenue for emergency relief.

Organizational Response and Responsibilities

Airport Management

- Provide alert information to responding agencies, airport tenants, users, and the general public at the airport.
- Conduct inspections and issue appropriate NOTAMs.
- Monitor the NOAA weather radio to ascertain conditions that will affect the airport. The airport may also obtain a tone alert monitor to watch weather or other relevant emergencies.
- Complete documentation regarding the event, including incident report, damage assessments, and financial impacts.

Fire Department

- Respond to protect persons and property.
- Coordinate search and rescue operations as needed.

Police Department

- Respond to protect persons and property.
- Participate in traffic control, evacuations, or sheltering of the general public.

Public Works

- Direct resources as necessary to assess damage, make repairs, and restore utilities.
- Provide equipment for shoring up public buildings or removing debris.

Hazard 3: Bomb Incidents/Terroristic Threats

Criminal activities and disturbances may include bomb threats, terrorism, vandalism, or crowd control problems. In general, law enforcement will assume Incident Command for these situations.

Emergency Contact Information

City of Durant Police Department:	911
Airport Manager:	580-230-1188
TSA:	866-907-8391
AOPA GA SECURE Hotline:	866-427-3287
City Manager:	580-931-6605 Cell: 580-434-2223

Alert Notifications and Warning

All parties listed under the Emergency Contact Information should be notified. It may not be necessary to contact the TSA or AOPA GA-SECURE Hotline for all criminal activities, such as for those not involving aircraft operations.

Response

Law enforcement will be the primary response agency and assume Incident Command. For bomb threats, airport management or personnel may be involved with gathering initial threat information and providing alert notifications and warnings.

Recovery

The Airport Manager will coordinate with law enforcement, conduct necessary inspections, issue appropriate NOTAMs, and return the airport to normal operations.

Organizational Response and Responsibilities

Airport Management

- If a threat is phoned in to the airport, use the bomb threat form to get as much information as possible.
- For a suspicious package or parcel, leave it unopened where it was discovered.
- Establish an isolation zone on the airport and clear it of all personnel.
- Have all passengers leave baggage and cargo. All persons should be detained until cleared by the designated law enforcement personnel.
- Notify the police department by calling 911.
- Notify the TSA by calling 866-907-8391.
- If on an aircraft, notify the person(s) or firm that owns the aircraft.
- For threats on aircraft or hijacking situations, direct all aircraft to the pre-determined isolation area located at the holding position short of the south end of the runway.
- Notify the tenant of the building, if any, and direct all persons to be evacuated to a minimum of 500 feet from the threatened building; ensure a tenant familiar with the building will meet with authorities to help identify building contents during the bomb search.
- Ensure all personnel and vehicles are kept a minimum safe distance of 500 feet from around the building; divert flights away from any building with a suspicious package or device.

Police Department

- Respond to scene and assume Incident Command.
- Assist with crowd control, evacuations, and protection of the public.
- Establish scene security and isolation areas.
- Coordinate any required law enforcement mutual aid.

Hazard 4: Hazardous Materials Emergencies

A hazardous materials emergency involves the possible spillage of hazardous material on a commercial, military, or private aircraft in flight or any hazardous materials incident on airport property.

Emergency Contact Information

City of Durant Fire/Police Departments:	911
Airport Manager:	580-230-1188
Durant/Bryan County Emergency Management	580-775-3661

Alert Notifications and Warning

Upon notification from the pilot or other responsible person(s), or observation of a hazardous material incident on airport property, notify the fire department by telephone (911).

Organizational Response and Recovery Responsibilities

Airport Management

- Provide alert notifications by calling 911.
- Notify any affected airport tenants or the general public at the airport and provide public information on evacuation or shelter-in-place procedures as coordinated with incident command.
- Issue appropriate NOTAMs closing isolation areas of the airport.
- **If the incident is on an aircraft, upon landing, direct the pilot to the pre-determined isolation zone.** *If the wind is out of the South, East or West, use the holding position short of the South end of the runway. If the wind is out of the North, use the holding position short of the North end of the runway.*

Fire Department

- Assume incident command
- For a hazardous materials spill (gas, fuel oil, etc.) of more than twenty-five gallons, or for assistance in dealing with any hazardous materials incident, notify Durant/Bryan County Emergency Management at 580-775-3661.
- Establish a 1,500-foot perimeter around the area or adequate distance per the *Emergency Response Guide* published by the Department of Transportation for isolation distance from the aircraft.
- Protect persons and property and implement evacuation or sheltering-in-place procedures.
- Permit only rescue crews and authorized personnel within the perimeter if radioactive smoke-borne or wind-carried particles are present.
- Close doors and windows of buildings in the area where blowing smoke-borne or other particles are present. Evacuate area.
- Determine if an actual spill has occurred. If the hazardous material container is found to be unbroken, the alert will be canceled and the material will be held in custody until proper disposal instructions are received. If a spill has occurred, the fire department and the senior fire official on scene will take charge, and the official will become the incident commander. The fire department will direct all containment and cleanup operations.

Emergency Medical Services (EMS)

- Provide any emergency medical services, patient care, or transport.

Public Works

- Provide equipment and resources for containment if necessary and as directed by

incident command.

Hazard 5: Structural Fires

A structural fire emergency involves fires occurring at or in airport buildings such as terminals or hangars.

Emergency Contact Information

City of Durant Fire/Police Departments:	911
Airport Manager:	580-230-1188
City Manager:	580-931-6605
Public Works:	580-924-8358

Alert Notifications and Warning

Airport management or a representative will contact all parties listed in the emergency contact information and notify affected tenants at the airport.

Response

City of Durant Fire Department will be the primary response agency and will assume Incident Command.

Recovery

Airport management and the public works department will be responsible for returning the airport to normal operations and working with affected building owners to clean up and document actions taken.

Organizational Response and Responsibilities

Airport Management

- Call 911.
- Take protective actions for employees and the public.
- Evacuate area according to evacuation plan.
- Coordinate response activities.
- Control access to facility until it has been inspected and/or will not impede with emergency response organizations.
- Coordinate news releases with incident command, if necessary.

Airport Staff/Maintenance

- Assist with critical services including utility support (activation/cutoff) as needed.
- Provide safety inspections.
- Assist in facility restoration.

Tenants

- Provide assistance on voluntary basis or in accordance with established agreements.
- Provide specialized tools, equipment, and knowledge of building contents as needed.

Fire Department

Fire department personnel on the scene will serve as Incident Command and will direct all efforts of fire suppression and rescue of individuals involved in the incident. The Incident Commander will assess the situation and ensure that adequate equipment is available for rapid fire suppression, rescue of victims, and transportation of victims to area hospitals. The scene Incident Commander will maintain contact with the Airport Manager.

Police Department

- Secure the area and ensure the free flow of emergency equipment into the incident scene.
- Handle crowd control, site security, and control of ingress and egress to the incident scene by authorized personnel.
- Assist firefighters in the suppression of fire and rescue/evacuation of victims if requested by the Incident Commander.

Emergency Medical Services (EMS)

- Provide emergency medical services for patient care and transport.

Public Works

- Direct clean-up operations of public buildings as necessary.

Hazard 6: Failure of Utilities

A utility failure on the airport may require closing the airport due to lack of lighting for aircraft operations or the need to keep operating aircraft and people away from a gas leak. The failure of the water main may require stopping work in hangars and ceasing fueling operations if water is required for first aid, such as eye wash stations or cleanup from a fuel spill. The fire department should be consulted about its ability to fight a fire while the water is cut off.

Emergency Contact Information

City of Durant Fire/Police Departments:	911
Airport Manager:	580-230-1188
Public Works:	580-924-8358

In case of electrical power failure:
- Call OG&E at 800-522-6870
- Stay clear of all downed power lines.

In case of gas line rupture:
- Clear the immediate area.
- Call ONG at 800-664-5463.

In case of water main break:
- Call the Durant Utility Department at 580-931-6631.

Alert Notification and Warning

Airport management or a representative will notify the responsible utility company of the failure as well as the public works department.

Organizational Response and Recovery Responsibilities

Airport Management
- Notify staff and repair personnel of the outage.
- Issue NOTAM, if required.
- Notify the appropriate FAA air traffic control facility by contacting Fort Worth ARTCC at 817-858-7500 regarding a failure that may affect the safety of flight.
- Notify tenants.
- Coordinate and disseminate public information to address public safety and impacts of utility failures in public buildings or parking lots.
- Inspect airport facilities to ensure proper working conditions before returning to service and normal operations. The critical facilities prioritized for return to service and inspections include:

Runways, taxiways and parking areas
Fuel tanks and pumps
Terminal building and hangars

Public Works
- Coordinate any repairs necessary with the utility companies and restore services to priority areas of the airport.

Hazard 7: Missing Aircraft

Emergency Contact Information

Oklahoma Highway Patrol:	911
Airport Manager:	580-230-1188
FAA Flight Services:	800-992-7433

Alert Notifications and Warning
The Airport Manager or representative may be notified by the FAA or the general public in cases of missing or overdue aircraft. It is possible that the pilot of a missing or overdue aircraft may have landed and not cancelled a flight plan. In these cases, the missing aircraft and pilot may be found somewhere on the airport facilities, and so notification to all responding agencies may not be required.

Organizational Response and Recovery Responsibilities

Airport Management

- Search airport facilities and check with tenants for missing or overdue aircraft.
- Alert local response agencies as appropriate for possible search and rescue operations.
- Obtain information regarding missing or overdue aircraft (see Missing/Overdue Aircraft Information Form).
- Coordinate with the FAA.

Oklahoma Highway Patrol

- Assist with any search and rescue operations.
- Coordinate any required mutual aid assistance.
- Consider activation of the EOC.

Police/Sheriff's Department

- Assist with any search and rescue operations.

Post-Incident Procedures

Implement Responders and Family/Victim Assistance Plan

- Designate secure facilities for victims' families and friends that are easily accessible and are removed from areas involved with the emergency response or designated for the media.
- Provide areas for the care of emergency responders.
- Provide the basic needs to accommodate both responders and the victims' family members. Emergency services and provisions for responders and family/victims may include food, water, and medical attention.
- Identify a process for responding to requests for information concerning the emergency event to victims' families and coordinate this activity with the public information officer (PIO).
- Consult with local emergency management officials to review options for providing mental health assistance. These services may be made available to both the families in crisis and the responders.
- Identify potential resources for helping responders cope with these situations, including the use of Critical Incident Stress Debriefings (CISD).

Implement Media Plan

- Implement an effective media plan that covers all phases of an airport emergency.
- Designate an area for media to gather and set up to cover the situation.
- Designate a PIO with responsibility to interface with the media. This designated individual will disseminate information consistent with inputs from all involved agencies and approved by Incident Command or Unified Command.
- Designate only one PIO for each emergency incident.
- Control and coordinate the media briefing with the PIO and other responding or investigative agencies such as the National Transportation Safety Board (NTSB).
- Conduct media briefings in a designated location and according to a designated schedule if the scale or duration of the airport emergency incident warrants it.
- Consider additional resources for dealing with large volumes of media inquiries during a major airport emergency incident.

Establish Safe Airport Operations

- Airport management is responsible for ensuring that all appropriate actions are taken, regardless of the type of emergency, to establish safe airport operations after an incident.
- As with other phases of an emergency, identify assignments and organizational responsibilities, command and control, and other required functional areas.
- If an airport has been closed due to an emergency situation, do not re-open it until the assigned personnel have ensured that:
  - Aircraft operating areas are safe and secure;
  - Aircraft movement areas to be reopened have been inspected;
  - Adequate aircraft rescue and firefighting protection is available (if applicable);
  - Public safety is assured.
- Ensure that responsibility is assigned for documenting all actions taken, including the writing of an incident report. This report should include all pertinent information regarding the incident such as type of incident, time and date of occurrence, names and addresses of persons involved, witnesses, reporting party, response actions, and recommendations for further actions.

Work Through Investigations

- An investigation will begin in the event of an aircraft accident, possibly during the response and recovery phase. The NTSB is responsible for accident investigations involving civil aircraft within the United States, but it is not uncommon for that responsibility to be delegated to the FAA.
- Establish scene security prior to the NTSB or investigative authority arriving on the scene of an aircraft emergency incident.
- Establish a perimeter around an accident scene to protect property and preserve evidence.
- Accommodate the NTSB or FAA and cooperate with the investigation.

The FBI and TSA may be involved in investigating criminal activities or terrorist threats.

Attachments

- Bomb Threat Form
- Aircraft Incident Report
- Missing Aircraft Form
- Airport and Terminal Maps

Bomb Threat Form

When is the bomb going to explode?_____

Where is it right now?_____

What does it look like?_____

What kind of bomb is it?_____

What will cause it to explode?_____

Did you place the bomb?_____

What is your name?_____

What is your phone number?_____

Note the exact wording of the threat (write on back).

What are the sex, race, and age of the caller?_____

What was the length of the call?_____

Number at which the call was received:_____

Time and date received:_____

Was the caller's voice familiar? If so, whom did it sound like:_____

Was the caller's voice calm, angry, excited, slow, rapid, soft, loud, laughing, crying, normal, distinct, slurred, nasal, stuttering, lisping, raspy, deep, ragged, clearing throat, breathing deeply, cracking, disguised, have an accent, familiar, or whispered?_____

Did you hear any background sounds?_____

Was the threat language well spoken, foul, irrational, incoherent, taped, or read like a rehearsed message?_____

- Call 911.
- Evacuate the building/aircraft to a safe distance.
- Contact the Airport Manager at 580-920-0574.

Aircraft Incident Report

Date: _____

Time: _____

Type of Incident (check one)
Aircraft Accident/Incident:_____
Natural Disaster:_____
Property Damage:_____
Bomb Threat:_____
Other:_____

Reported by
Name: _____

Address: _____

Phone #: _____

Location: _____

Weather conditions:
_____
_____
_____
_____

Nature of incident:
_____
_____
_____
_____
_____
_____

Aircraft type and tail number: _____

Name(s) of pilot(s): _____

Pilot(s) contact information: _____

Units that responded to incident:
_____
_____
_____
_____

Action
taken:_____

Missing Aircraft Form

The Airport Manager and staff will assist in locating aircraft on or near the airport by taking the following information and actions:

Notified of a missing aircraft (N-number): _____

By (name): _____

Of (organization): _____

Contact number:_____

Estimated time of arrival: _____ at (airport):_____

Aircraft type: _____

Aircraft color: _____

Pilot name: _____ number: _____

Local contact (name): _____ number: _____

People on board: _____

Last contact (time): _____ location: _____

1. Check to see if the aircraft is on the ramp.
2. Check the hangar list to see if the pilot, or a local contact have a hangar on the field.
3. Call the hangar owner to ask if the aircraft is in hangar.
4. Visit the hangar if unable to contact hangar owner.
5. Contact police to find out if an aircraft crash has been reported in the area.
6. Physically tour the airport property, looking off the ends of runways and any low spots where an aircraft would not be easily seen.
7. Report back to the person who reported the aircraft missing.
8. If the initial report came from the pilot's family or friends, contact Flight Services at 800-992-7433 .
9. If the aircraft is not initially located, contact the Airport Manager at 580-920-0574.

Airport and Terminal Map

Figure 1. Airport Safety Map

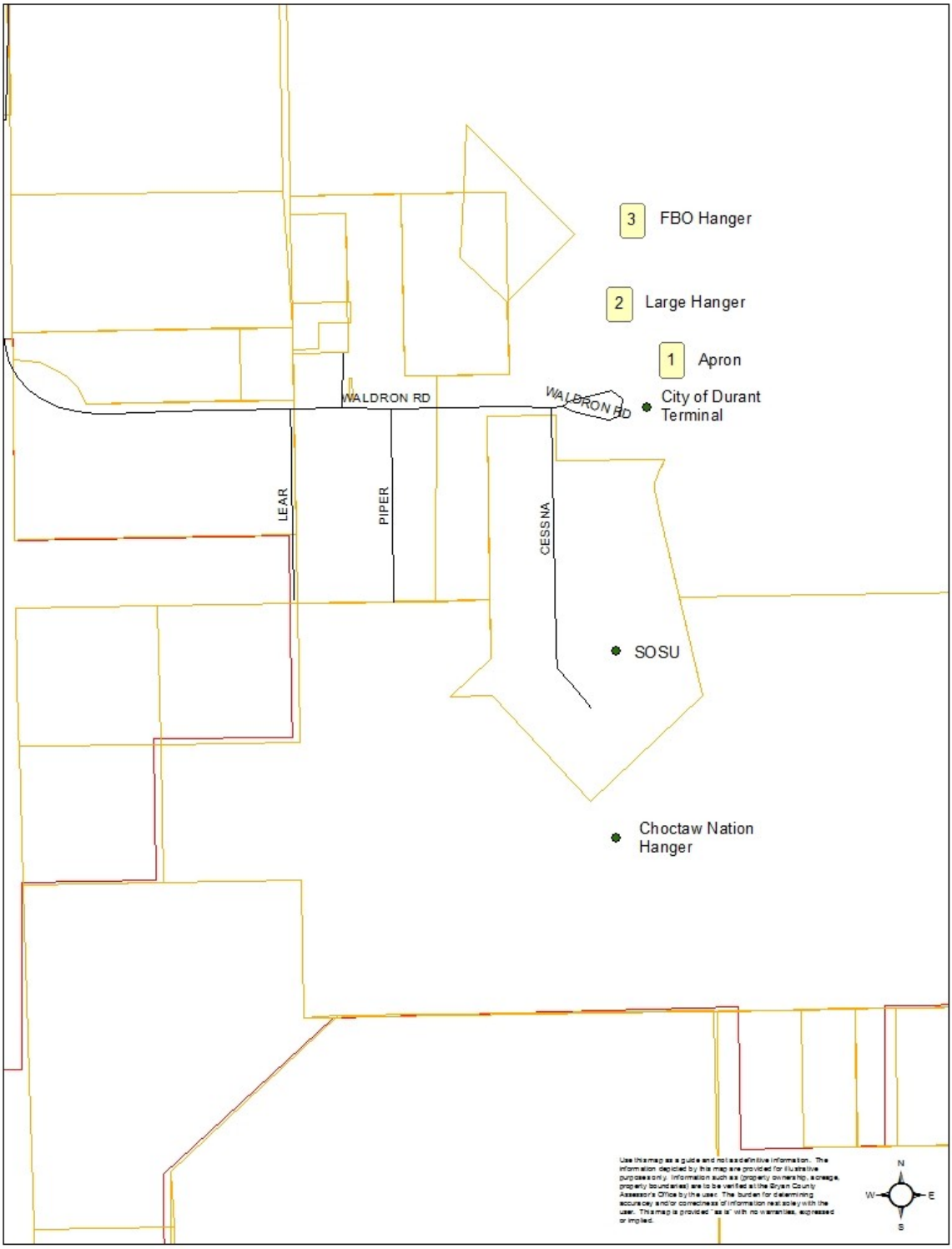

ANNEX U
INCOMING MAIL SECURITY PLAN

I. Mail Center Operating Procedures – Creating a Safe and Secure Environment

Incoming Mail Procedures

Inspect the mail for suspicious characteristics. If possible, do this in an area isolated from the rest of the mail center. Mark all packages with a stamp that says "inspected" to acknowledge that it has been screened if at all possible.

Limit access for anyone who delivers mail to your center; deal with them at a counter.

Authorized receptacles for U.S. Mail clearly labeled.

Procedures established for handling unexplained or suspicious packages.

Make personal protection equipment available for all employees, including gloves and masks.

Instruct employees to challenge any unknown person in the facility.

Deliveries for Senior Executives

Give extra care and attention to letters and packages addressed to any senior official whose names and/or positions give them higher public visibility. Meet with representatives from the senior management to establish procedures for mail and packages addressed to senior officials. Mark all packages and envelopes addressed to senior officials after you have screened them; the best practice is to use a large stamp that says “Inspected”. No letters or packages should be accepted at the Executive Area unless clearly stamped “Inspected”. This includes both internal and external deliveries.

Handling Accountable Mail

Mail center personnel should sign for all accountable mail (UPS, Fed Ex, etc) with the same measures and precautions as regular postal mail.

Personal Mail

In most circumstances, City policy should prohibit handling incoming or outgoing personal mail in the mail center.

Loss Prevention and Cost Avoidance

- Screen job applicants before hiring them.
- Integrate accounting procedures for all forms of postage – meters, stamps and permits.
- Permit only authorized employees to accept mail.

- Review bills from carriers (e.g., FedEx, UPS) regularly to guard against unauthorized use.

- Check periodically to determine if the mail messengers are making unauthorized stops or leaving the mail unattended in unlocked delivery vehicles

- Appropriate bonding or surveillance as necessary.
  .

Physical Security in a Mail Center/Facility

- If possible, make the mail center an enclosed room with defined points of entry. If you can't put the mail center in its own room, then set aside a defined space that is used only for processing mail.

- Be sure to check the ventilation system of the area you choose to ensure adequate but isolated air handling and ventilation system.

- Obtain a glove box or biochemical hood, or use of one, in which to open identified suspicious mail (a biochemical hood operates with negative air pressure).

- Provide a separate and secure area for personal items (e.g., coats and purses).

- Where appropriate, use surveillance cameras to monitor the mail service counter and all entrances (Assure your employees that the cameras aren't for tracking their movements, but for protecting them from potential threats.)

- Post signs around the mail center listing whom to call in the event of various emergencies such as fire, theft, suspicious package, etc. This is probably the most important step you can take in preparing to deal with emergencies or suspicious letters and packages.

Daily Opening and Closing Procedures

Prepare detailed procedures for opening and closing the mail center. Make sure that logs and checklists are filled out and signed daily.

The checklist for opening the mail center should include:

- Check all locks/entrances
- Start visitor log
- Verify contents of safe/vault

The checklist for closing the mail center should include:

- File visitor log
- Secure all mail
- Create safe/vault contents log
- Check all locks/entrances

Establish daily procedures for cleaning the area and equipment used to process inbound mail. All flat work areas should be wiped down daily with disinfectant. All machines should be cleaned with disinfectant wipes and vacuums equipped with HEPA filters. Do not use pressurized air to clean equipment and machinery.

Personal Protective Equipment

The City does not recommend *mandatory* use of personal protective equipment (PPE) if the suspicious mail analysis does not support it. This includes gloves, aprons, and respirators. On the other hand, the City does recommend making PPE available for any mail center personnel who chose to use it. This equipment can cause problems, so any employee who chooses to use it must be trained. Removing gloves the wrong way can spread contamination, for example, and respirators can induce respiratory problems in some people. Respirators must be fitted by a trained expert to provide any useful level of protection. Managers must ensure that all equipment is kept clean and properly serviced.

The Centers for Disease Control (CDC) provide guidance on selecting PPE to protect against bioterrorism, and the Occupational Safety and Health Administration (OSHA) provides guidance on using PPE in workplaces.

If some employees chose to use PPE, you should establish a log that lists when each employee completed equipment training.

Psychological Effects

More deeply than most of realize or are willing to admit, we have been profoundly affected by the attacks on the United States and the specter of a prolonged war against terrorism. We need to support each other and listen well with our ears and our hearts. For many reasons, this elevated need for good listeners will linger for a long time. In addition, the on-going hoaxes generated keep our emotions high in anticipation of another attack.

Feel and observe what is going on around you. Listen to what is being said and to what is not being said. Watch the attitudes, moods and body language of co-workers, friends and others with whom you interact. Do you sense that unspoken fears are troubling a co-worker? Does he/she seem unusually quiet, sad troubled or edgy? Trust your instincts and intuitions. Don't hesitate to strike up a conversation. When you really care and when you are willing to take time to be with another you may be surprised at how readily people will open up and share their feelings with you. Create an atmosphere that welcomes sharing, while also being respectful of individuals who have little to say or prefer to remain silent.

The attitudes and feelings of employees are critical to the success of your mail center during normal operations, and even more so in light of the attacks. It is important to recognize that some of your employees will have concerns about their personal safety. Managers need to be prepared to help employees carry out their jobs in these challenging times.

Workplace Violence

Employees who are being harassed, stalked or threatened inside or outside the workplace should inform their managers, and supervisors. Managers have a responsibility to be sensitive to the realities of workplace violence and the effects on employees from abuse outside the workplace. Some employees may be involved in domestic disputes that have the potential to erupt and spill over into the workplace. Every effort must be made to protect these employees and anyone else who may become an innocent victim.

Building security should be notified, and additional steps should be actions taken to protect these employees. If there appears to be an immediate threat, notify the law enforcement resource that can most readily provide security in the situation.

II. Training, Testing, and Rehearsal

The actions you take ***during*** a threat have an immediate impact on the safety of everyone in your mail center. The actions you take ***before*** a threat have a lasting impact on the safety of everyone in your agency. Preparing your mail center and your employees to handle a threat is an obligation you must meet every day.

Education and awareness are the essential ingredients to preparedness. Employees need to remain aware of their surroundings and the packages they handle. You must carefully design and vigorously monitor your security program to reduce the risk for all.

Through training, you can develop a culture of security awareness in your operation. Through rehearsal, you can ensure that critical lessons have been learned and retained. Managers should consider security training and rehearsal a critical element of their job.

In addition to educating the employees who work for you, you should educate the employees who work for your agency. Employee awareness of the measures you've taken leads to confidence in the safety of the packages that are delivered to their desktops.

The importance of testing the plan

One key to performance during an emergency is testing of the plan in advance. Test contingency plans in a way that does not alarm employees but follows the steps to take if there is an event. The dress rehearsals reinforce the training and in the event of an emergency can more easily be followed.

Contents of a complete training program

- Basic security procedures
- How to recognize and report suspicious package
- Proper use of personal protective equipment (PPE)
- How to respond to a biological threat
- How to respond to a bomb threat
- Occupant Emergency Plan (OEP)

III. Managing Threats

Suspicious letters and packages

Because the mail center is a first line of defense for your agency, you should examine every piece of mail before you do anything else with it. You should inspect and look for suspicious characteristics. Figure 4 is a standard list of characteristics that you and your staff should be looking for.

Characteristics of suspicious packages or letters

- Excessive postage, no postage, or non-canceled postage
- No return address or obvious fictitious return address
- Packages that are unexpected or from someone unfamiliar to you
- Improper spelling of addressee names, titles, or locations
- Unexpected envelopes from foreign countries
- Suspicious or threatening messages written on packages
- Postmark showing different location than return address
- Distorted handwriting or cut and paste lettering
- Unprofessionally wrapped packages or excessive use of tape, strings, etc.
- Packages marked as "Fragile - Handle with Care", "Rush - Do Not Delay", "Personal" or "Confidential"
- Rigid, uneven, irregular, or lopsided packages
- Packages that are discolored, oily, or have an unusual odor
- Packages that have any powdery substance on the outside
- Packages with soft spots, bulges, or excessive weight
- Protruding wires or aluminum foil

Train employees. Mail Center employees should be trained to recognize and report suspicious packages. Characteristics of a suspicious package or letter vary, depending upon the types of

mail that your operation routinely processes. That is, what is suspicious in one mail center is not necessarily suspicious in another. However, anything from the following list that is unusual, in terms or your normal mail, or multiple items from this list, should draw the attention of your employees.

Post examples.

Copies of a "suspicious letter" poster should be displayed in every mail center. These posters are available from the Federal Bureau of Investigation (FBI) and the USPS. We have worked with the FBI, USPIS, and other authorities to develop the standard list shown in Figure 4. Phone numbers of who to call should be filled in.

Rehearse.

Rehearse scenarios and test contingency plans with employees to ensure that, in the event of emergency, they will know how to respond. Do this in a way that does not alarm employees. These rehearsals will help ensure that the lines of communication function as planned and that everyone knows their role. Hold post-test meetings to address problems, and resolve them before the next test.

Question every suspicious letter or package.

If you can stabilize an unopened suspicious letter or package, with some confidence that it presents little immediate threat, try to determine whether the addressee or sender can identify and explain the contents. The following is quoted from GSA National Guidelines:

Whenever a mail center worker identifies an unopened package or letter as "suspicious", a mail center supervisor or specially trained employee should examine the mail piece to confirm that it meets the criteria established for the location. If confirmed, *do not open it.* A supervisor or designated mail center worker who is trained to confirm the identification must be available during all working hours.

Next, determine if the mail piece is addressed to a person who actually works in the facility. If so, and if the addressee can be located in a reasonable period of time, contact the addressee and ask him or her to identify the package. If the addressee recognizes the package and is certain it is not threatening, deliver it. If the addressee does not recognize the package, or if you cannot locate the addressee, attempt to contact the individual listed on the return address to verify the contents of the package. If you successfully contact the sender of the package, ask them to provide a description of the contents, intended addressee, and the reason it was mailed to your location. Provide this information to the addressee for further verification.

If the addressee does not recognize the package, or if you cannot locate the addressee, ***do not open it.*** The supervisor or designated mail center worker should call the previously designated first responder (that is, the organization you have identified as the right one for the specific threat in hand). This first responder will be responsible for opening the package in a controlled environment and following the appropriate protocol for evaluation of the threat. A "controlled environment" may be a glove box, hood with negative airflow and HEPA filters on the exhaust airflow, or a similar device. When identifying the first responder who will open suspicious letters or packages, make sure they have such a device available.

IV. Communications Plan

The mail center should develop a communications plan to be executed when responding to a threat. This plan should cover how to acquire and distribute information. Prepare a list of trusted resources to acquire timely and accurate information (e.g., GSA, USPS, CDC, etc.). Organize protocols for the approval and distribution of information on the status of the mail operation.

Management

Schedule regular meetings with a representative from the senior management of your agency. Review the steps you've taken to secure the mail, and address any outstanding issues. Begin with more frequent meetings, perhaps monthly. As events dictate, you may be able to change the frequency to quarterly or semi-annually.

Mail Center Personnel

Mail center personnel should be thoroughly involved in developing and implementing your security plans. Once they have been developed, the most important part of communicating those plans is training. We also suggest that you set aside time in every meeting with mail center personnel to discuss security. Enhanced security procedures and vigilance must become a way of life for those involved.

As part of your security procedures, you should establish a call tree for employees and managers. The call tree list should include, as a minimum:

- Names
- Addresses
- Work phone numbers
- Home phone numbers
- Cellular phone numbers
- Name of person to contact in an emergency

This call tree should be tested and updated regularly.

Communications During an Emergency.

Clear, consistent, and factual communications are critical in any emergency. Anyone in authority must be very careful to check their facts, to know who the designated official spokesperson is for every aspect of the emergency, and to coordinate any messages thoroughly.

Relationships with partner organizations (First Responders, Public Health Authorities, FBI, FPS, Regional USPIS, Fire, Hazmat and Law Enforcement Officials)

Many other aspects of security also require that you develop and maintain relationships with key partners. Your first task in this regard is to establish and maintain relationships with:

- Local first responders to federal mail centers (fire, hazmat, and law enforcement);
- Local public health authorities (disease control and laboratory).
- Regional Federal Bureau of Investigation Weapons of Mass Destruction (WMD) coordinators; and
- Regional US Postal Inspection Service inspectors.

Once you have identified your first responder(s), then

1. Determine who will be responsible for opening unopened suspicious letters and packages, and establish a relationship with them (this may be a specially trained federal personnel or other first responders).
2. Establish relationships and protocols with the local Federal Bureau of Investigation (FBI) WMD Coordinator concerning suspicious powders and liquids, or make sure that your first responders have done so.

V. Occupant Emergency Plan (OEP)

The Occupant Emergency Plan (OEP) is a set of procedures to protect life and property under defined emergency conditions. The Mail Center Manager should be actively involved in the Occupant Emergency Program and in development of the OEP.

An occupant emergency is an event that may require you to be evacuated from your occupied space or relocated to a safer area. The emergency may include a fire, explosion, discovery of an explosive device, severe weather, earthquakes, chemical or biological exposure or threat, hostage takeover, or physical threat to building occupants or visitors. In the event of an emergency, the mail center manager must protect the people who work there and ensure their exit from the situation to a safe place.

Occupant Emergency Program

The Occupant Emergency Program establishes a process for safeguarding lives and property in and around the facility during emergencies. The first component of an Occupant Emergency Program is development of a plan, which is the OPE, to protect life and property under certain specified emergency conditions. The second component is the formation of an Occupant Emergency Organization.

Occupant Emergency Plan (OEP)

The critical elements of the OEP are:

Evacuation Plans

Be sure to specify where the mail center's employees should gather immediately after an evacuation, so that the supervisor on duty can take a head count. In some circumstances employees may be instructed to Shelter-in-Place. Depending on the circumstances and nature of the emergency, the first important decision is whether to stay put or get away.

Whom to Contact in the Event of an Emergency

All personnel should know whom to contact in case of emergency. A list of all emergency phone numbers should be available to everyone and updated as assignments change. The list should be published with the OEP for the facility. This list should be included in the Go-Kit.

Building/Occupant Information

The OEP should contain specific information about the building's construction and its occupants in narrative form or on a Building Information Sheet and Occupant Information Sheet. Floor plans should be included, with evacuation plans clearly marked.

Go kits

To be prepared for various types of breaches of security or different types of emergencies, the mail center should have a "go kit." At a minimum, this should consist of COOP checklists (see Section XII below, key contact lists, diskettes or CDs with critical files, any specialized tools that are routinely used, maps to alternate sites records, and any other information and equipment related to an emergency operation. A "go kit" should contain those items considered essential to supporting contingency operations at an alternate site. You should designate a key official and one or more alternates to pick up the kit in an emergency. You should also keep a duplicate go kit at your backup facility.

VIII. Review of the Security Plan

Initial Review

An excellent method of ensuring that your plan is complete is to have it reviewed by external resources. Examples include consultants, the Federal Protective Service, agency security service, and a peer review.

Annual Review

Once a year or if there are any changes, you should review all aspects of your security plan. Pull them out, read through them, and consider carefully whether any aspect should be updated. Circumstances change, and the information on protecting your mail center and your agency continue to evolve as we travel together in this new world of homeland security. Re-evaluate your last rehearsal to determine any training needs that might have emerged as a result. Train your personnel and rehearse your plan.

Conclusion

Although the mail center operates as the focal point for federal agencies, security policies and procedures for the mail center are often overlooked. Security is critical to mail center operations – large and small. This Mail Center Security Guide was prepared by GSA with a team of experts to help you, as a mail center manager, and your coworkers keep your mail center safe and secure. Prevention is the key for keeping your mail center secure.

Like training, reviews should be continual. You should schedule annual reviews of your security program to be sure that it's up-to-date and complete.

Appendix B – On Line Resources For Keeping Your Mail Center Safe

Excellent resources for additional information include:

U.S. Department of Labor (DOL), Occupational Safety and Health Administration (OSHA) – http://www.osha.gov

Workplace Risk Pyramid, OSHA – http://www.osha.gov/bioterrorism/anthrax/matrix

Centers for Disease Control (CDC) - http://www.bt.cdc.gov

Office of Personnel Management - publishes questions and answers on federal employees personnel issues, etc. - http://www.opm.gov

Federal Bureau of Investigation (FBI) – http://www.fbi.gov

Federal Emergency Management Agency (FEMA) – http://www.fema.gov

Bureau of Alcohol, Tobacco and Firearms (BATF) – http://www.atf.treas.gov

DA PAM 25-52, Mail Facility Security and Handling Suspicious Mail – http://www.usapa.army.mil/pdffiles/p25_52.pdf

Council on Foreign Relations - Homeland Security Questions and Answers on Biological Attacks - http://www.terrorismanswers.com/security

General Services Administration (GSA) – http://www.gsa.gov

GSA Mail Communications Policy Office - http://www.gsa.gov/mailpolicy

Suspicious Letters and Packages Identifiers - Now part of the National Guidelines on the GSA Mail Policy web site. Choose Mail Center Security and then Choose the National Guidelines. You will find ta printable version under appendix c. http://www.gsa.govmailpolicy

GSA Federal Protective Service - http://www.dhs.gov/dhspublic/ and type in Law Enforcement in the search tool.

Security Assessment – http://www.oca.gsa.gov (Note – you will need to obtain a password to use the resources on this site)

US Postal Service (USPS) – www.usps.com

USPS Suspicious Mail Alert Poster (downloadable) - http://www.usps.com/news/2001/press/mailsecurity/security.htm

USPS and FBI Reward Poster - www.usps.com/news/_pdf/25m_poster.pdf

USPS Postal Inspection Service - www.usps.com/postalinspectors

Best Practices for Mail Center Security - www.usps.com/news/2001/press/mailsecurity/pr01_isbestprac.htm

The following publications are available from the US Postal Inspection Service:

Identify Theft Brochure - (Publication 280) - Www. new.usps.com/cpim/ftp/posters/pos265.pdf

Misleading Advertisements - Media Guidelines (Publication 257) - www.usps.com/cpim/ftp/pubs/pub257.pdf

Consumer & Business Guide to Preventing Mail Fraud Publication 300A - www.usps.com/cpim/ftp/pubs/pub300a.pdf

Bombs by Mail (Notice 71) - www.new.usps.com/cpim/ftp/notices/not71.pdf

Drugs by Mail (Poster 265) - www.new.usps.com/cpim/ftp/posters/pos265.pdf

Notice of Reward (Poster 296) - www.new.usps.com/cpim/ftp/posters/pos5.pdf

Some Things Were Never Meant to Be Mailed (Poster 76) - www.usps.com/postalinspectors/is-pubs.htm

Warning! Reusing Postage (Poster 5) - www.new.usps.com/cpim/ftp/posters/pos5.pdf

Appendix C – Mail Center Security Checklist

This checklist was first developed in 2002 to assist federal agencies develop and determine the requirements for their security plans. Back by popular demand, this tool is provided to assist Mail Center Managers with the preparation of their security plans, and to aid in determining the security requirements for their mail center/facilities.

I. Inbound Mail Procedures

YES	NO	
☐	☐	Written Policies and Procedures are available on how incoming mail is processed.
☐	☐	Incoming mail is isolated in an area where it can be inspected.

☐ ☐ Delivery personnel have limited access to the mail center and are received at a Controlled area outside the mail center where possible.

☐ ☐ Letters/packages for senior Agency officials are given extra attention and inspected closely.

☐ ☐ A system is in place for accountable letters and packages (i.e. certified mail, UPS, FedEx, etc). Delivery is verified and only complete shipments are accepted.

☐ ☐ Accountable mail is signed for (whenever possession changes) and is never left at an unoccupied desk or mailbox.

☐ ☐ Incoming personal mail is not handled by the mail center (unless the exemption for your agency applies).

II. Security Training

YES NO

☐ ☐ Basic security procedures have been developed and training has been provided.

☐ ☐ Employees have been trained on how to recognize and handle suspicious packages/letters.

☐ ☐ Procedures are posted on how to recognize suspicious packages/letters and staff trained.

☐ ☐ Employees have been trained on the proper use of personal protection equipment, if it is being used.

☐ ☐ Employees are trained on the Occupant Emergency Plan and are regularly tested.

☐ ☐ Training is regularly provided by the Facility Mail Managers through seminars, conference calls, and/or web based training.

☐ ☐ Facility Mail Managers are aware of training available through other sources such as the General Services Administration and the U. S. Postal Service.

☐ ☐ Mail centers rehearse various evacuation plans and/or scenarios.

III. Physical Security

ANNEX U
INCOMING MAIL SECURITY PLAN

YES	NO	
☐	☐	The mail center is an enclosed room with defined points of entry or a defined space that is used only for processing mail.
☐	☐	Access to the mail center is limited to those employees who work in the mail center or have need for immediate access.
☐	☐	Visitors to the mail center sign a log and are escorted at all times.

Agenda Item: 1.x.

The City of Durant

Grants Department

Memorandum

Date:	9/7/2016
To:	Mayor and City Council
From:	Rebecca Collins, Grants Coordinator
Re:	Consideration To Accept The 2016 Local Edward Byrne - Justice Assistance Grant (JAG) GMS Award 2016-DJ-BX-0601 From The Office Of Justice Programs In The Amount Of $11,995 For An HVAC System To Be Installed At The Durant Police Department Firing Range. (C-2016-77)

On September 2, the 2016 Local Edward Bryne-JAG grant was awarded in the amount of $11,995.

At Chief Houser's request, these funds will be utilized towards the purchase and installation of a new HVAC system at the only publicly owned firing range in Bryan County, which is managed by the Durant Police Department.

Per the approved MOU with Bryan County, the application to the 2016 Edward Byrne Memorial Justice Assistance Grant Program was a joint effort and identifies the CITY OF DURANT as the applicant and fiscal agent for the joint funds.

The range directly benefits law enforcement personnel from the Bryan County Sheriff's Department and at least 18 other federal, state, local and tribal agencies, as well as, the local National Guard Unit and Future Farmers of America (FFA) youth programs.

SEE ATTACHED MOU.

Council Information / Action Requested

Accept The 2016 Local Edward Byrne-Justice Assistance Grant (JAG) GMS Award 2016-DJ-BX-0601. (C-2016-77)

City Staff Information / Action Follow-up, if Council authorizes this action:

Becca will complete the grant award requirements, so the HVAC purchase and installation may proceed.

ATTACHMENTS:

Description	Type	Upload Date
2016 Edward Byrne-JAG MOU with Bryan County	Cover Memo	9/7/2016

Durant Police Department

3104 Carl Albert Drive
Durant, Oklahoma 74701-5015
Phone: 580/924-3737 * Fax: 580/924-8928
David R. Houser, Chief of Police

MEMORANDUM OF UNDERSTANING

WHEREAS the CITY OF DURANT owns and maintains a POLICE FIRING RANGE located at 1620 Blanchard Road in Durant, Oklahoma.

WHEREAS the POLICE FIRING RANGE is under the care and control of the DURANT POLICE DEPARTMENT and is the only public safety range in Bryan County.

WHEREAS the DURANT POLICE DEPARTMENT offers MONTHLY TRAINING and STATE MANDATED yearly qualification opportunities at the police firing range for the BRYAN COUNTY SHERIFF'S DEPARTMENT and other local, state and federal agencies free of charge.

WHEREAS the POLICE FIRING RANGE classroom is in need of a heating, ventilation and air conditioning (HVAC) unit to FURTHER the offering of these TRAINING initiatives.

WHEREAS the CITY OF DURANT and BRYAN COUNTY both share in the value obtained from the upgraded classroom facility to further continuing education training in order to increase officer safety, officer awareness, officer capabilities and meet state mandates.

WHEREAS the disparate parties identify that application to the Edward Byrne Memorial Justice Assistance Grant Program FY 2016 is a joint application and identifies the CITY OF DURANT as the applicant and fiscal agent for the joint funds.

IN WITNESS THEREOF, the City of Durant and Bryan County have signed this memorandum of understanding agreeing that both parties receive benefit from the improved training facility.

CITY OF DURANT

Signature

Stewart Hoffman
Representative Printed Name

Mayor
Title

6·29·2016
Date

BRYAN COUNTY

Signature

Ron Boyer
Representative Printed Name

Chairman
Title

6-30-2016
Date

Agenda Item: 1.y.

The City of Durant

Grants Department

Memorandum

Date:	9/7/2016
To:	Mayor and City Council
From:	Rebecca Collins, Grants Coordinator
Re:	Consideration To Accept The 2016 Land And Water Conservation Grant (LWCF) Award From The Oklahoma Department of Tourism And Recreation In The Amount Of $ 182,900 For Park Improvements At Carl Albert Park. (C-2016-78)

The grant award for the 2016 Land and Water Conservation (LWCF) project has been funded for improvements at Carl Albert Park in the amount of $182,900. The approved match commitment includes a $69,000 budgeted cash match and committed in-kind labor and equipment to complete a successful project.

Once the environmental review is complete, the grant agency will assign a grant contract #.

Per the grant agency, approval for construction is proposed to begin approximately March 1, 2017.

SEE ATTACHED BUDGET.

Council Information / Action Requested

Accept The 2016 Land and Water Conservation Grant Award (LWCF) (C-2016-78).

City Staff Information / Action Follow-up, if Council authorizes this action:

Becca will complete the environmental review and award documentation.

ATTACHMENTS:

Description	Type	Upload Date
2016 LWCF Estimated Budget for Carl Albert Park	Cover Memo	9/7/2016

City of Durant

FY 2016 OK Land and Water Conservation - Outdoor Recreation Program

Carl Albert Park

PROJECT ESTIMATED COSTS

		GRANT REQ	REQUIRED 50% MATCH				
CONSTRUCTION ELEMENTS	**TYPE**	**OK TOURISM-LCWF**	**LOCAL CASH**	**CITY LABOR**	**CITY EQUIP**	**TOTAL MATCH**	**TOTAL PROJECT**
Paved Entrance, Drive & Parking							
Drive Entrance thru park & parking (base rock and asphalt)	New	**$48,000.00**	$12,000.00	$25,000.00	$25,000.00	**$62,000.00**	$110,000.00
* * Re-purpose tennis court materials for sub-base	Old						
Striping	New	**$2,500.00**	$2,500.00	$0.00	$0.00	**$2,500.00**	$5,000.00
ADA Parking Signage (6)	New	**$150.00**	$150.00	$150.00	$150.00	$450.00	$600.00
	TOTAL	**$50,650.00**	**$14,650.00**	**$25,150.00**	**$25,150.00**	**$64,950.00**	**$115,600.00**
Playground Pad, Sidewalks, Fence							
* * Remove dilapidated tennis courts	Labor	**$0.00**	$0.00	$15,000.00	$15,000.00	**$30,000.00**	$30,000.00
Safety Surface (Fall zone)	New	**$25,000.00**	$5,000.00	$0.00	$0.00	**$5,000.00**	$30,000.00
Concrete Pad (2000 SF) & Sidewalks	New	**$6,000.00**	$2,000.00	$5,000.00	$5,000.00	**$12,000.00**	$18,000.00
Fencing for playground / fitness area	New	**$5,000.00**	$2,000.00	$3,000.00	$2,000.00	**$7,000.00**	$12,000.00
	TOTAL	**$36,000.00**	**$9,000.00**	**$23,000.00**	**$22,000.00**	**$54,000.00**	**$90,000.00**
Playground & Fitness Equip							
Playground Equipment & Installation	New	**$28,000.00**	$17,000.00	$5,000.00	$0.00	**$22,000.00**	$50,000.00
Adult Fitness Equipment & Installation	New	**$5,000.00**	$5,000.00	$0.00	$0.00	**$5,000.00**	$10,000.00
	TOTAL	**$33,000.00**	**$22,000.00**	**$5,000.00**	**$0.00**	**$27,000.00**	**$60,000.00**
Lighting							
Light equipment and installation	Equip	**$8,000.00**	$2,000.00	$3,000.00	$3,000.00	**$8,000.00**	$16,000.00
Electrician Services	New	**$1,250.00**	$1,250.00	$0.00	$0.00	**$1,250.00**	$2,500.00
	TOTAL	**$9,250.00**	**$3,250.00**	**$3,000.00**	**$3,000.00**	**$9,250.00**	**$18,500.00**
Bury Overhead Electrical							
Bury Existing Overhead Lines	New	$54,000.00	$20,000.00	$4,000.00	$4,000.00	**$28,000.00**	$82,000.00
	TOTAL	**$54,000.00**	**$20,000.00**	**$4,000.00**	**$4,000.00**	**$28,000.00**	**$82,000.00**
LWCF Signage (2)	New	$0.00	$100.00	$100.00	$100.00	**$300.00**	$300.00
	TOTAL	**$0.00**	**$100.00**	**$100.00**	**$100.00**	**$300.00**	**$300.00**
TOTAL APPLICATION BUDGET		**$182,900.00**	**$69,000.00**	**$60,250.00**	**$54,250.00**	**$183,500.00**	**$366,400.00**

Agenda Item: 1.z.

The City of Durant

Office of the Street Department

Memorandum

Date:	9/7/2016
To:	Mayor and City Council
From:	James Young Street Superintendent
Re:	Consider Approval of Request For Authorization To Purchase/Spend(RFAP#2016-170)For $248,000. For Replacement of Drainage Pipe At Durant Middle School

---

In May of 2015 the Cities drainage structure from Willow street to nth 7th was damaged due to flooding. Fema paid the City $90,000.00 to repair 300 foot of that structure that had collapsed and or had sink holes. In order for the City to replace all of the metal drainage structure with concrete reinforced pipe we budgeted $248,000.

Council Information / Action Requested

To Consider Approval of RFAP # 2016-170

City Staff Information / Action Follow-up, if Council authorizes this action:

City Clerk / Street Superintendent to prepare bidding documents /Quotes

ATTACHMENTS:

Description	Type	Upload Date
RFAP#2016-170	Cover Memo	9/7/2016

R02122015

SPEND/CNTRCT#
INCODE PROJ#
RFAP# 2016-170

REQUEST FOR AUTHORIZATION TO PURCHASE

Ref: 11 O.S. §10:114 (B) and 61 O.S. §103 (D) and & City of Durant Code: § 37.003-37.010

Item #

1 Item planned for spending (provide details):
Replace drainage pipe at The Durant Middle School at Nth 9th ave and Willow street

2 Department requesting authorization:
Street

3 Bidding recommendation (award or reject along with name and contact information of vendor):
Pipe to be formal bids and concrete and Rock to be informal bids and Asphalt will be state contract

4 Estimated Purchase Date (M/D/Y): October 1st,2016

5 What are the financing or lease purchase terms (APR %, length of financing, payments, etc.)
na

6 Is this item included in the current FY budget (Yes/No) Yes

7 GL account code: #015-016-541.62-95

8 Spending / purchase request details (complete below blanks):

8a Amount requested to spend $248,000.00

8b Item (new or replacement, if a capital item complete fixed asset form)? Replacement

8c Old Item to be Traded-In (Yes / No). Note: if a capital item complete fixed asset form? No

If a Replacement Item, give description, age and condition of item to be replaced (including model & serial or VIN, trade allowance) NA

8d Is a contractor written agreement involved (Yes / No), if yes include a copy of the contract after City Attorney Review No

8e Does the purchase involve Grant Funding (Yes or No) No

8f What is the City Cash Match for the Grant NA

8g What other match or financial obligation is involved with the City accepting this Grant (explain with details)

9 Purchase is Planned By (complete appropriate item(s) below):

9a **Informal Quotes** – Purchases of $2000-$15,000 City Manager approval required. Purchases with an estimated cost over $15,000 use formal bids. Specifications & at least 3 quotes must be attached for items over $5,000 (city manager can require quotes for below $5,000):

Informal quotes for concrete

9b **Formal Bids** – Purchases with an estimated cost over $15,000 Council approval required. Attach complete specifications and a bidders list with at least 3 bidders. Include bidder name, address, phone number, fax number and email address of recommended vendor:

Formal bids for concrete pipe

9c **State Contract** – Purchases of $2,000-$15,000 City Manager approval required. Purchases over $15,000 Council approval required. Include name, address, phone number, fax number, email address of state contract vendor and state contract number:
Asphalt will be State Contract price

9d **Buy Board** – Purchases of $2,000-$15,000 City Manager approval required. Purchases more than $15,000 Council approval required. Include name, address, phone number, fax number, email address of Buy Board:

blank

9e **Professional Services Agreement** – Purchases over $2,000 and less than $15,000 via an engineering, surveying, architect, computer services, janitorial, etc. firm covered by a council approved professional services agreement, City Manager approval required.

blank

9f **Emergency Purchase** – To be utilized only when immediate action must be taken to protect the public health or safety or to prevent damage to property, prior council approval not required. Notify the City Manager immediately that an emergency purchase is needed.

blank

9g **Sole Source Purchase** – Purchases of $2,000-$15,000 City Manager approval required. Purchases with an estimated cost over $15,000 Council approval required in addition to City Manager approval. Attach to this request a memo detailing the nature of the Sole source designation, that is explain how this purchase fulfills the requirements to be considered a sole source purchase:

blank

10 Signature & date blocks (complete appropriate sections):

10a	Signature of Grants Administrator (if applicable)	date (M/D/Y): 9-06-16
10b	Signature Department Head	date (M/D/Y): 9-07-16
10c	Signature of Division Head	date (M/D/Y): 9-7-16
10d	Signature of Budget Administrator	date (M/D/Y):
10e	Signature of Finance Manager	date (M/D/Y): 9-7-16
10f	Signature of City Manager (only over $2,000)	date (M/D/Y): 9-07-2016
10g	Signature of City Treasurer (date)	date (M/D/Y):

11h City Manager Comments:

The City of Durant

Office of the Street Department

Memorandum

Date:	9/7/2016
To:	Mayor and City Council
From:	James Young Street Superintendent
Re:	Consider Approval To Accept Low Bid For Concrete Drainage Pipe For The Durant Middle School Project #632

On August 25th we received sealed bids for Concrete pipe for The Durant Middle School drainage project #632. The 2 bids that we received were Rinker Materials for $124,243.60 and Forterra pipe and precast for $95,944.00 my recommendation would be to accept the low bidder Forterra Pipe and precast for the amount of $95,944.00

Council Information / Action Requested

Consider accepting low bidder Forterra Pipe and Precast for the amount of $95,944.00

City Staff Information / Action Follow-up, if Council authorizes this action:

Street Superintendent to notify bidders and prepare Purchase Orders

ATTACHMENTS:

Description	Type	Upload Date
Bidding documents	Cover Memo	9/7/2016

Specifications for Concrete

Pipe for Middle School drainage Repair

Project # 632

Approximately 1,376 feet of 48" Inside diameter and 8 ' long joints of class -3 tongue and groove RC P and 2 -45 degree 48" elbows all with gaskets and plugs delivered to Job site at Nth 9th avenue and Willow street in Durant, OK between the hours of 6 am to 2:30 pm Monday through Friday. Please state earliest delivery date and what equipment needs to be on site to unload pipe.

Any questions please contact James Young, Street Superintendant @ (589) 924-8828 OR Cell # (580) 775-2486.

Bidders List

1. Forterra
   ATT: Steve DUVALL
   6504 Interpace
   Oklahoma City OK, 73135
   Phone 405-365-8811
   Cell 405-365-6766

2. Rinker Materials
   ATT: Adam Sharp
   6200 South West 44th Street
   Oklahoma City OK, 73179
   Phone 405-745-3404

3. Nance Precast Concrete Products
   ATT: Brandon Gauthe
   PO Box 116
   5601 Washington Ave. E
   Piedmont Ok, 73078
   Phone 405-373-1800
   Fax 405-373-1803

City of Durant
Bid Tabulation Sheet

Durant Middle School Drainage Project #632

Bid Deadline: August 25, 2016 @ 10:30am

BIDDER	BID AMOUNT
Steve Duvall Forterra Pipe & Precast 6504 S. Interpace Street Oklahoma City, OK 73135	**$95,944.00**
Adam Sharp Rinker Materials 6200 SE 44th St. Oklahoma City, OK 73179	**$124,243.60**

IN ATTENDANCE:

Cynthia Price, City Clerk
James Young, City of Durant

STAFF RECOMMENDATION: FORTERRA PIPE & PRECAST

$95,944.00

BIDDER'S RETURN SHEET
Bid: "Durant Middle School Drainage Project #632"
Bids Due by August 25, 2016 @ 10:30am

Amount of bid per specifications dated August 4, 2016.

Total Bid Amount FOB Durant, OK $ 95,944.00

Total Bid Amount in Words: Ninety-five thousand, nine hundred forty-four dollars and 00/100

List Any Deviations to Specifications: NONE

48" ID x 8' long RCP = 7,080 lbs/ea.

State Earliest Delivery Date: 3-4 weeks after receipt of P.O.

State Warranty Terms: One year materials only

Forterra Pipe & Precast — 8/23/2016
Company Submitting Bid — Date

AFFIDAVIT: I, the undersigned, of lawful age, being first duly sworn on oath, say that I am the agent authorized by the bidder to submit the above bid. Affiant further states that the bidder had not been a party to any collusion among bidders in restraint of freedom of competition by agreement to bid at a fixed price or to refrain from bidding; or with any City official or employee as to quantity or price in the prospective contract or any other terms of said prospective contract; or in any discussion between bidders and any City official concerning exchange or money or other thing to any officer or employee of the Durant City Utilities Authority any money or other thing of value, either directly or indirectly in the procuring of the award of a contract pursuant to this bid.

Subscribed and sworn before me this 23rd day of August 2016.

NOTARY PUBLIC STATE OF OKLAHOMA
OFFICIAL SEAL
MARTIN HERNANDEZ
Commission # 10000545
Expires January 20, 2018

(SEAL)

My commission expires 1/20/18

Notary Public

Firm: Forterra Pipe & Precast

Signed:

Printed Name: Steve Duvall

Title: Sales Manager

Address: 6504 S. Interpace St.
OKC, OK 73135

Telephone: 405-365-6766

Fax: 405-677-6106

Mark Outside Envelope "Bid: Durant Middle School Drainage Project #632"

STEVE DUVALL
Sales Manager

FORTERRA | PIPE & PRECAST

6504 S. Interpace St.
Oklahoma City, OK 73135
T 405.677.8811 C 405.365.6766 F 405.677.6106
steve.duvall@forterrabp.com

BIDDER'S RETURN SHEET
Bid: "Durant Middle School Drainage Project #632"
Bids Due by August 25, 2016 @ 10:30am

Amount of bid per specifications dated August 4, 2016.

Total Bid Amount FOB Durant, OK $ 124,243.60

Total Bid Amount in Words: One Hundred Twenty-Four Thousand Two Hundred Forty-Three Dollars and 60/100 cents.

List Any Deviations to Specifications: None

Equipment Required - Trackhoe + lifting straps for Elbows

State Earliest Delivery Date: September 6th, 2016

State Warranty Terms: See attached Terms + Conditions

Hydro Conduit Corp Dba Rinker Materials 8/22/16
Company Submitting Bid Date

AFFIDAVIT: I, the undersigned, of lawful age, being first duly sworn on oath, say that I am the agent authorized by the bidder to submit the above bid. Affiant further states that the bidder had not been a party to any collusion among bidders in restraint of freedom of competition by agreement to bid at a fixed price or to refrain from bidding; or with any City official or employee as to quantity or price in the prospective contract or any other terms of said prospective contract; or in any discussion between bidders and any City official concerning exchange or money or other thing to any officer or employee of the Durant City Utilities Authority any money or other thing of value, either directly or indirectly in the procuring of the award of a contract pursuant to this bid.

Subscribed and sworn before me this 22 day of August 2016.

KILEY ENGDAHL NOTARY # 15001194 EXP. 02/06/19 PUBLIC STATE OF OKLAHOMA

(SEAL)

My commission expires 2/6/19

Notary Public

Firm: Hydro Conduit Corp Dba Rinker Materials

Signed:

Printed Name: Adam Sharp

Title: Account Manager

Address: 6200 SW 44th St. OKC, OK 73179

Telephone: 405-745-3404

Fax: 405-745-3804

Mark Outside Envelope "Bid: Durant Middle School Drainage Project #632"

STANDARD TERMS AND CONDITIONS

1. **PARTIES.** Buyer ("Buyer) acknowledges, understands and agrees that, by accepting this Quotation ("Quotation') it shall be bound by the Standard Terms and Conditions set forth herein and that said Standard Terms and Conditions shall be enforceable against Buyer by **Hydro Conduit Corporation d/b/a Rinker Materials Concrete Pipe Division** and all of its divisions, subsidiaries, affiliates, privies, assigns, associated or affiliated companies, corporations, partnerships, successors, and insurers ("Seller"). Buyer's Credit Application, if any, this Quotation including these Standard Terms and Conditions, and Seller's order confirmation, if any, shall form the sole agreement ("Agreement') under which Buyer shall purchase goods, materials and services ("Materials') front Seller, and acceptance of any purchase order from Buyer is hereby made expressly conditional upon Buyer's acceptance of the terms and conditions contained herein. **Any different or additional terms or conditions contained in Buyer's acceptance of this offer, whether by purchase order or otherwise, are hereby objected to by Seller and shall have no effect on, and not become part of, the terms and conditions of this Agreement. Additional terms, changes, and alleged subsequent agreements shall not be effective unless signed by Seller's authorized representative.**

2. **APPLICABILITY.** This Agreement is made between Buyer and Seller. All the terms and conditions herein are intended to and shall apply to all purchases of the Materials set forth in this Quotation.

3. **BUYER REPRESENTATIONS.** Buyer represents to Seller that, as of the date of this Agreement, it is solvent and that any financial information provided or attached, either as part of this Agreement or previously provided with Buyer's Credit Application, if any, accurately reflects the current financial condition of Buyer. If at any time Seller deems the financial condition of Buyer as unsatisfactory, Seller reserves the right to require payment in full in advance or other security satisfactory to Seller. Buyer further warrants and represents that it has authority to enter this Agreement and that any person signing this Agreement has been duly authorized to execute this Agreement for and on behalf of Buyer. Each representation and the information contained herein is material and given to induce the Seller to provide credit.

4. **TECHNICAL ASSISTANCE.** In no event shall Seller bear any responsibility for claims arising from technical advice or assistance provided to Buyer. Advice and assistance provided by Seller is for Buyers guidance only and Buyer agrees to rely solely on its own architects, engineers or other technical experts.

5. **LIMITED WARRANTY AND LIABILITY DISCLAIMER.** Seller warrants that the Materials sold under this Agreement meet solely the description and specifications for the same set forth in this Quotation, if any, and shall be free from defects in material and workmanship for a period of one (1) year from the date of delivery thereof. No other express warranties are made with respect to said Materials. Acceptance by Buyer of the Materials shall constitute confirmation by Buyer that the Materials meet the description and specifications, if any, set forth in this Quotation, if any. The foregoing warranty is subject to standard manufacturing and color variations, efflorescence, tolerances and classifications. Seller is not responsible for installation or defective conditions caused by installation. Buyer's exclusive remedy for breach of this warranty shall be to require Seller, at Seller's option, to refund the purchase price for the Materials sold hereunder, to repair or to replace any nonconforming Materials. Seller shall not be responsible for any removal or installation costs. THE FOREGOING WARRANTY IS IN LIEU OF AND EXCLUDES ALL OTHER WRITTEN OR ORAL WARRANTIES OR CONTRACTUAL AGREEMENTS, WHETHER EXPRESS OR IMPLIED BY LAW OR OTHERWISE, INCLUDING THE IMPLIED WARRANTIES OF FITNESS FOR A PARTICULAR PURPOSE, MERCHANTABILITY OR HABITABILITY. Seller warrants that the use or sale of the Materials will not infringe on the claims of any United States patent covering the Materials, but Seller does not warrant against infringement by reason of the use of the Materials in combination with other materials, goods, or manufacturing processes.

6. **CLAIMS.** Buyer's exclusive procedure for commencing claims under this Agreement against Seller shall be as follows: Notice of claims against Seller for breach of warranty or for alleged short delivery of Materials must be given to Seller promptly upon discovery and must be supported in writing within seven (7) days after discovery to afford Seller an opportunity to investigate such claims promptly and mitigate any potential damages. Failure of Buyer to give such notice shall constitute a waiver by Buyer of its right to later make such a claim.

7. **LIMITATION OF LIABILITY.** Seller's liability on any claim for loss or damage arising out of the supplying of any Materials to Buyer, or their sale, operation or use, whether based on contract, warranty, tort (including negligence) or other grounds, shall not exceed the price of the Materials actually received from Buyer by Seller with regard to which such claim for loss or damage is made. In no event shall Seller be liable, whether as a result of breach of contract, warranty, tort (including negligence) or other grounds, for special, consequential, incidental, liquidated or penal damages including, but not limited to, loss of profits or revenue, loss of use of the Materials or any associated product, cost of capital, cost of substitute products, facilities, services, downtime costs, or claims of customers of the Buyer for such damages.

8. **INDEMNIFICATION BY BUYER.** To the fullest extent permitted by law, Buyer further agrees that, in specific consideration for receiving the express warranty granted by Seller in paragraph 5 above, it will indemnify and hold harmless Seller from and for any and all damages, including attorney's fees and costs, incurred by Seller in connection with any claim, demand, liability, or cause of action asserted against Seller for personal injuries, loss of life, property damages, or economic losses of Buyer or its employees, agents, representatives or any other person or entity; provided, however, that Buyer's duty hereunder shall not arise if such claims, demands or liability are caused by the willful misconduct of Seller.

9. **DELIVERY AND INDEMNIFICATION.** Seller's responsibility for delivery shall cease FOB shipping point or, if Seller agrees to deliver FOB delivery site, at the curbside or street or frontage of the address of delivery. If Buyer requires Seller to cross a curb line or enter upon private property to make delivery on site, Buyer shall be responsible to provide safe and adequate access and such delivery shall be at the risk of Buyer. Following delivery, Buyer shall be responsible for compliance with all governmental regulations and ordinances with regard to disposal, storage or placement of the same and shall indemnify and hold Seller harmless against all claims for personal injuries, including death, and any damage to private or public property arising from the delivery, storage, use, disposal or handling of said Materials. Unless otherwise specifically agreed, shipments will be made only during normal business hours, but nor on Saturdays, Sundays, or holidays recognized by Seller or labor unions under contract with Seller. If Buyer is in default under this Agreement or any of its contracts or obligations with Seller, Seller may, at its sole option and without prejudice to any of its other remedies: (i) postpone further deliveries or shipments until such default is remedied; or (ii) terminate any and all obligations under any contract or obligation and refuse further performance without any liability to Buyer.

10. **DELIVERY SITE CONDITIONS.** Seller reserves the right to determine whether the site for delivery requested by Buyer is suitable for such delivery and Seller may refuse to deliver to a site if Seller is of the opinion that delivery would be unsuitable or unsafe. Buyer shall be responsible for all costs and damages incurred where, in the sole opinion of Seller, adequate access for delivery cannot be obtained. Where delivery of products is to an unattended site, Seller will not be liable for any loss or damage to products, property or for unsigned delivery tickets.

11 **DELAYS.** If Seller is unable to complete delivery of any part of an order, Buyer shall accept such part of the order as Seller is able to deliver and Buyer shall pay for the part delivered pro rata at the same rate as the whole of the order agreed to be sold and on the same terms of payment. In the event Seller shall be delayed in or prevented from the performance of any act required under this Agreement, or it shall become commercially unreasonable to perform, by reason of governmental allocations, priorities, restrictions or regulations now or hereafter in effect. storm, flood, fire, earthquake or other Acts of God, war, terrorism, riot, insurrection or other civil disturbance, strikes, lockouts or other labor disturbances, shortages or allocation of raw materials, power outages or any other contingencies beyond Seller's reasonable control whether of a similar or dissimilar nature to the foregoing, Seller shall not be liable to Buyer for any damages incurred by Buyer as a result of any such delay or failure to perform.

12. **QUANTITIES.** The type and quantity of Materials delivered and detailed on the delivery ticket must be checked by Buyer at the time of delivery for compliance with Buyer's order. Variations between actual quantities of Materials delivered and those shown on the delivery ticket must be noted on all copies of the delivery ticket signed by Buyer. Invoice charges will be based on the quantities shown on the delivery ticket. Any claim for alleged short delivery of Materials must be made in accordance with Section 6 above, otherwise it will be deemed accepted by Buyer. In the absence of any claim Buyer shall be liable to pay for the full quantity of the Materials listed on the delivery ticket.

13. **CREDIT, CONDITION PRECEDENT TO SELLER'S OBLIGATION TO PERFORM, PERSONAL GUARANTEE.** Any and all credit terms of payment must be set forth in this Agreement. In the absence of any such credit terms, all deliveries under this Agreement are 'Collect on Delivery' (C.O.D.) or 'Cash In Advance' (C.I.A.). Buyer agrees upon request to furnish Seller such additional information (including financial statements) as is deemed necessary in the opinion of Seller to determine Buyer's financial condition. Seller's obligation to perform under this Agreement is subject to the condition precedent that Seller does not notify Buyer that Seller's Credit Department has disapproved any credit terms of payment specified herein.

14. **CREDIT.** Should Buyer's account be opened and approved with a credit amount, this amount, as amended from time to time, applies to the total purchases and can be exceeded at any given time only if approved by Seller's Credit Manager. Buyer acknowledges that Seller is relying upon the credit worthiness and financial ability of the guarantors, owner, or

STANDARD TERMS AND CONDITIONS

owners of Buyer, and Buyer, guarantors and such owner or owners shall be jointly and severally liable for all indebtedness of Buyer to Seller incurred under this Agreement.

15. **PAYMENT.** Buyer shall make all payments due hereunder in United States currency and in accordance with the terms of this Agreement, without any right of setoff or retention and without regard to any agreement Buyer may have with other parties. If delivery is to be delayed either at the request of Buyer or through no fault of Seller past the delivery date specified in this Agreement, Buyer shall pay promptly in full for all Materials sold hereunder. If any payments are not received when due, Seller may, at its option, assess an additional charge equal to the lesser of eighteen percent (18%) per annum or the maximum rate permitted by law, for each thirty (30) day period of delay or part thereof to cover Seller's increased costs, or, in the alternative, upon notice to Buyer, cancel the portion of this Agreement which remains to be performed. If no due date is stated elsewhere in this Agreement, payment of all invoices is due by the 15th day of the month following invoicing. Until Seller has received full payment for the Materials sold under this Agreement Buyer shall not remove nor allow the removal of said Materials from the jobsite to which they were delivered, nor shall Buyer use or allow the use of any such Materials for any project other than the one for which they were purchased.

16. **OFFSET AND/OR SETOFF.** Seller may exercise the right of set-off under this Agreement as to any sums owed by Seller and/or its affiliates under any other contract or agreement with Buyer and/or its affiliates.

17. **PAST DUE ACCOUNTS.** Should Buyer fail to pay when due any amount payable to Seller under the terms of this Agreement or should Buyer's financial condition become impaired or unsatisfactory to Seller, in the Seller's sole opinion, Seller may, at its option, make demand upon Buyer for: (1) immediate payment of all amounts then due and owing to Seller under this Agreement; (2) payment in advance or at the time of delivery of all future amounts to become due under this Agreement, and or (3) such other assurances as Seller shall deem necessary to adequately assure Seller that Buyer will perform its obligations under this Agreement. Until Seller receives the same, Seller may suspend its performance of this Agreement, and if such assurances are not received from Buyer within a reasonable time not exceeding ten (10) days. Seller may, at its option, deem this Agreement to have been repudiated by Buyer. Buyer further agrees to pay Seller any and all collection fees, attorneys' fees, and court costs incurred by Seller in collecting any amounts due under this Agreement.

18. **TAXES.** In the absence of an exemption or resale certificate acceptable to Seller and to the respective taxing authority, all federal, state and local taxes, assessments, fees, duties and charges levied by reason of this Agreement are in addition to the prices quoted in each applicable Quotation and shall be paid by Buyer.

19. **TITLE & RISK OF LOSS.** Title and risk of loss to the Materials shall transfer to the Buyer FOB Shipping Point or upon payment, whichever occurs earlier, and Buyer hereby grants Seller a first priority security interest in all such Materials until such time as Seller is paid in full all amounts due under this Agreement. Buyer further agrees to execute any and all documents that may be required for Seller to perfect such security interest.

20. **INSURANCE.** To them extent required by law, Seller will procure insurance coverage for itself and its employees or, if no such requirement exists, in an amount Seller deems appropriate. Notwithstanding any request in any bid documents, purchase order or any contract documents to the contrary, Seller will not provide a waiver of subrogation clause nor additional insured status for any party under any circumstances, nor shall Seller's insurance be primary and non-contributory.

21. **MODIFICATION OF TERMS.** No employee or agents of Seller has the authority to make any statement, including restricting or modifying or otherwise concerning the existence or effect of any of these Standard Terms and Conditions or of any warranty or guarantee and no such employee or agent making any such statements shall be acting on behalf of or with the consent or agreement of Seller. These conditions may only be altered or varied in writing signed by a Seller Credit Manager, General Manager or Regional Manager and no other employee nor any other person has the authority to alter or vary any or all of these terms and conditions.

22. **ASSIGNMENT.** Buyer shall not assign this Agreement or any interest herein without the prior written consent of Seller, and any attempted assignment, whether by operation of law or otherwise, shall be void without such prior written consent.

23. **NOTICE.** Any notice required to be sent to Seller shall be in writing and sent by Certified Mail, postage prepaid, to the Seller office set forth on this Quotation, with a copy to Seller c/o Rinker Materials, P. O. Box 24636, West Palm Beach, FL 33416-4636.

24. **SEVERABILITY.** If any term, provision, covenant, or condition of this Agreement is held by a court of competent jurisdiction to be invalid, void, or unenforceable, the remainder of the provisions shall remain in full force and effect and shall in no way be affected, impaired, or invalidated. The parties agree that each term and provision of this Agreement shall be construed according to its fair meaning and not strictly for or against any Party.

25. **VENUE AND CHOICE OF LAW.** The parties hereto agree that venue for any action brought for the breach of or the enforcement of this Agreement will lie in the county where Seller chooses or where Materials were purchased. This Agreement shall be governed by and shall be construed in accordance with the laws of the State of Florida, without regard to its conflicts of law provisions. Any and all actions brought by Buyer under this Agreement shall be brought within one (1) year of the date of delivery of the Materials with respect to which the action relates. AS A MATERIAL INDUCEMENT TO SELLER TO ENTER INTO THIS AGREEMENT, BUYER WAIVES THE RIGHT TO TRIAL BY JURY IN ANY PROCEEDING ARISING OUT OF OR RELATED TO THIS AGREEMENT.

26. **ENTIRE AGREEMENT.** This Agreement sets forth the sole and entire agreement between the parties with regard to the subject matter hereof and supersedes any and all prior or contemporaneous oral or written agreements between the parties regarding the same. No delivery of any Materials shall be made until Buyer returns a signed copy of this Agreement. Facsimiles, copies or other reproductions of this Agreement shall have the same effect as an original thereof.

27. **WAIVER.** Seller may, in its sole discretion, permit Buyer to remedy any default under this Agreement without waiving the default so remedied or any other subsequent or prior default by Buyer. Buyer waives notice of default of this Agreement and waives presentment, demand, protest and notice of dishonor as to any instrument.

28. **MISCELLANEOUS.** Buyer consents to Seller sending information to Buyer regarding Seller's products and prices at any time by fax to any fax number provided by Buyer, otter electronic means or otherwise.

29. **QUOTATION TERMS AND CONDITIONS.**

A. PRICES Unless stated otherwise herein, prices for the Materials quoted are subject to material availability at the time of Quotation and shall remain firm for a period of thirty (30) days after the date of the Quotation; thereafter, prices for the Materials quoted are subject to change by Seller. Prices quoted are based on minimum truckload lots and are subject to increase should Buyer request delivery in lots smaller than truckload. Prices are applicable only to the job quoted, are available only to the Buyer specifically named herein, and are only for the quantities stated herein.

B. TESTS. Seller reserves the right to levy an additional charge on Buyer for any tests not required by project plans and specifications provided by Buyer to Seller at the time of Quotation that Buyer may require to be performed on the Materials sold under this Agreement. Failure of Buyer to witness any tests shall be decreed a waiver by Buyer of its right to do so and of any right to require repetition of such tests, and Buyer shall be deemed to have accepted any such test results as sufficient to meet its specifications.

C. DELIVERY DATE. In the absence of a specific delivery date on this Quotation, Seller will commence delivery of the Materials on a date and at a rate mutually agreed upon by both Seller and Buyer. Unless otherwise set forth herein, Buyer shall perform unloading of the Materials and any special fittings, both at its sole expense. Seller reserves the right to charge Buyer at the applicable rate for any waiting time at the jobsite in excess of one (1) hour.

D. RETURNS. Standard Materials sold under this Agreement may be returned for credit only with Seller's prior written consent and only if, in Seller's sole opinion, the Materials to be returned are in re-saleable condition. Seller will deduct from any such credit all loading and unloading costs, and any costs of repair and delivery costs to and from Buyer's jobsite that were paid by Seller. Custom-designed and special items of other than normal and standard design regularly sold by Seller cannot be returned.

E. ACCEPTANCE. If Buyer does not accept this Quotation by an authorized signature on the Quotation form during the time period set forth in Section A above and Seller ships such Material upon Buyer's request, whether written or verbal, then Buyer's acceptance of such Materials shall operate as an acceptance of the prices and the Standard Terms and Conditions stated herein.

City of Durant
Bid Sign In Sheet
Durant Middle School Drainage Project #632

Bid Deadline: August 25, 2016 @ 10:30am

ATTENDEE NAME	REPRESENTING
James Young	City of Durant.
Cynthia Price	City of Durant

The City of Durant

Durant Fire Department

Memorandum

Date: 9/7/2016
To: Mayor and City Council
From: Roger Joines Fire Chief
Re: Consideration For Approval To Apply For Grant Funding Through The Federal Emergency Management Administration (FEMA) 2016 Assistance To Firefighters (AFG) Grant.
1. Consideration For Approval To Apply For Grant Funding For Approximately $382,500 Through The Federal Emergency Management Administration (FEMA) 2016 Assistance To Firefighters (AFG) Vehicle Acquisition Grant Program To Purchase A 1500 GPM Pumper/ Engine
2. Consideration For Approval To Apply For Grant Funding For Approximately $25,000 Through The Federal Emergency Management Administration (FEMA) 2016 Assistance To Firefighters (AFG) Micro Grant Program To Purchase Turnout Gear Dryers.

---

1) The 2016 AFG Vehicle grant request of $ 382,500 will provide funding to replace a nineteen year old truck and purchase a much needed 1500 gallon pumper engine. This would enhance current operating capabilities to better protect and serve the community, while providing safer equipment for all DFD firefighters. The grant budget of $ 425,000 would include a committed 10 percent match of $ 42,500.

2) Turnout Gear dryers are vital for maintaining bunker gear to provide dry PPE for the fighters in preparation for the next response. Not only is it the quickest means to dry the gear, but will also increase the lifespan of the turnout gear through this drying process. Price for Turnout Gear Dryers is $24,000. to equip three stations. The cities match would be $2400. for this Micro Grant.

Council Information / Action Requested

Consider Approval to Submit Application for AFG Grant

City Staff Information / Action Follow-up, if Council authorizes this action:

Fire Department and Grants Department will combine efforts to compile information and write grant.

Agenda Item: 1.ac.

The City of Durant

Office of Projects Manager

Memorandum

Date: 9/9/2016
To: Mayor and City Council
From: Jacque J. Wilson, Projects Manager
Re: Consider Approval of Permanent Electric Utility Line Easement Parcel 11

Consider Approval of Permanent Electric Utility Line Easement for Oklahoma Gas & Electric's (OG&E) transmission lines required for Commercial Metals Company (CMC) Micro Mill operations. Parcel 11 located within the City landfill.

Council Information / Action Requested

Consider Approval of Permanent Electric Utility Line Easement Parcel 11

City Staff Information / Action Follow-up, if Council authorizes this action:

ATTACHMENTS:

Description	Type	Upload Date
OGE Easement Form - P11-City of Durant Wilson (FINAL)	Cover Memo	9/9/2016

AFTER RECORDING RETURN TO:
OG&E ELECTRIC SERVICES
ATTN: LAND MANAGEMENT SERVICES
P. O. BOX 321, MAIL CODE M109
OKLAHOMA CITY, OK 73101-0321

EASEMENT

WORK ORDER NO. 1644886
PARCEL NO's. 11

KNOW ALL PERSONS BY THESE PRESENTS: THAT City of Durant, Grantor, in consideration of Ten or more dollars, in hand paid, the receipt of which is hereby acknowledged, and other good and valuable consideration, does hereby grant and warrant unto OKLAHOMA GAS AND ELECTRIC COMPANY, an Oklahoma corporation, hereinafter referred to herein as Grantee, and Grantee's successors and assigns, the right and authority to enter upon, erect, operate, repair and maintain a system of poles, wires, anchors, guy wires, and other fixtures for the transmission and/or distribution of electric current and communication messages upon, over, under and across a certain tract of real property, situated in Bryan County, State of Oklahoma, as described in the attached Exhibit A (hereinafter referred to as the "Easement Property"), together with the right to re-enter upon the Easement Property for the purpose of reconstructing, resetting, and making improvements to said system, and together with such right of ingress and egress to and from the said Easement Property across Grantor's lands contiguous to the Easement Property as may be necessary to accomplish the purposes herein set forth.

Grantor further covenants and agrees that Grantee, in Grantee's sole discretion, shall have the right, privilege, and authority to enter upon, cut, trim and keep trimmed, remove, and/or treat with selective herbicides and control the growth of any brush and trees that may, in Grantee's sole judgment, interfere with or endanger the construction, operation, and maintenance of said system hereinafter constructed on the Easement Property. Grantor hereby consents to permit Grantee to trim and keep trimmed and/or treat with selective herbicides any trees and foliage on Grantor's real property immediately adjacent to the Easement Property.

Grantor further covenants and agrees that within the Easement Property, no planting of any tree or bush, no building, sign, billboard, or other structure or the construction of any dam, pond, ditch, berm or other barrier to mobility on and along the Easement Property will be erected by the Grantor unless the written consent of the Grantee is first obtained. Grantor further covenants and agrees that Grantor shall not accomplish or permit any excavation or other removal of soil, so as to change the grade of terrain of the Easement Property, without the prior express written consent of Grantee.

The consideration which has been paid to Grantor for this Easement represents full and complete compensation for all damages which Grantor has sustained and may hereafter sustain by reason of the exercise by Grantee of the rights and privileges granted hereunder, except that actual damage to the grass and planted crops, exclusive of trees, caused during and by the construction or reconstruction of said electric system, or improvements thereto, will be paid after completion of the work and the extent of said damage has been determined.

The rights and privileges above granted shall continue in effect without interruption or abatement until surrendered and released by Grantee in writing and recorded in the office of the County Clerk in the above-named county.

Signed and delivered this _____ day of _____, 2016.

_____ _____

Jacque J. Wilson, City Projects Manager

ACKNOWLEDGMENT

STATE OF _____, COUNTY OF _____, SS:

On this _____ day of _____, 2016 , before me, a Notary Public within and for the County of _____, in the State of Oklahoma, duly commissioned and acting, appeared in person,_____ , to me personally well known as the persons whose names appear upon the within and foregoing instrument as the party Grantor and stated that they had executed the same for the consideration and purpose therein mentioned and set forth, and I do hereby so certify.

In Testimony Whereof, I have hereunto set my hand and seal of office as such Notary Public at the County and State aforesaid, on this _____ day of _____, 2016.

My Commission Expires: _____ _____

(SEAL) Notary Public

Commission No._____

CORPORATE /TRUST ACKNOWLEDGMENT

STATE OF _____, COUNTY OF _____, §:

Before me, the undersigned, a Notary Public, in and for said County and State, on this _____ day of _____, 2016, personally appeared _____, to me known to be the identical person who subscribed the name of the maker thereof to the foregoing instrument for _____, as its _____, and acknowledged to me that they executed the same as their free and voluntary act and deed of such _____, for the uses and purposes therein set forth.

My Commission Expires: _____ _____

(SEAL) Notary Public

Commission No._____

Mar-13

WO# 1644886

R 9 E

PID: 11

Owner: City of Durant

Book 682 , Page 237

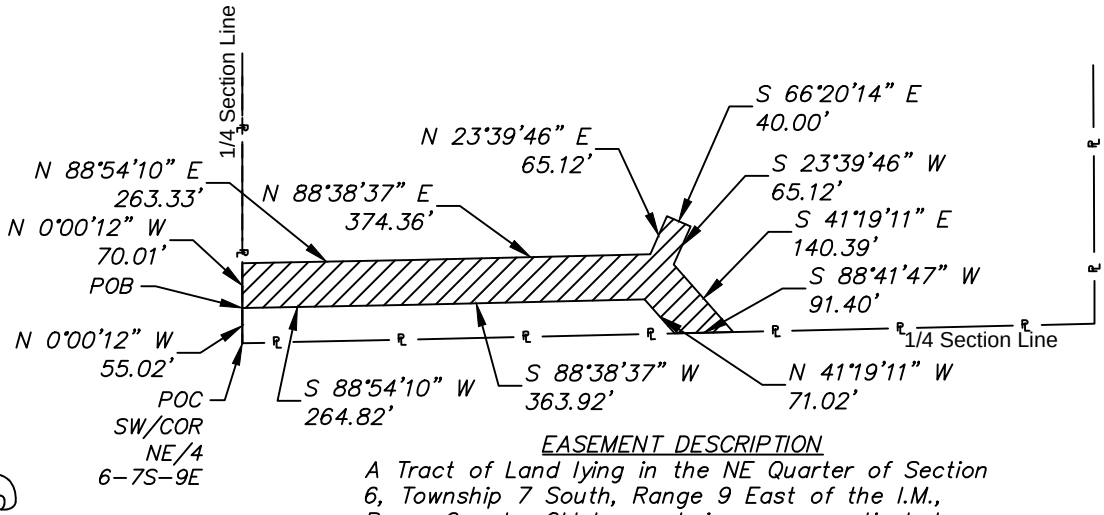

T 7 S

EASEMENT DESCRIPTION

A Tract of Land lying in the NE Quarter of Section 6, Township 7 South, Range 9 East of the I.M., Bryan County, Oklahoma, being more particularly described as follows:

COMMENCING at the SW Corner of said NE Quarter;
Thence N 00°00'12" W a distance of 55.02 feet to the POINT OF BEGINNING;
Thence N 00°00'12" W a distance of 70.01 feet;
Thence N 88°54'10" E a distance of 263.33 feet;
Thence N 88°38'37" E a distance of 374.36 feet;
Thence N 23°39'46" E a distance of 65.12 feet;
Thence S 66°20'14" E a distance of 40.00 feet;
Thence S 23°39'46" W a distance of 65.12 feet;
Thence S 41°19'11" E a distance of 140.39 feet;
Thence S 88°41'47" W a distance of 91.40 feet;
Thence N 41°19'11" W a distance of 71.02 feet;
Thence S 88°38'37" W a distance of 363.92 feet;
Thence S 88°54'10" W a distance of 264.82 feet to the POINT OF BEGINNING.

Said Tract contains 1.2784 acres or 55,688 square feet of new right of way more or less.

0 150 300 600

Scale: 1" = 300'

REGISTERED PROFESSIONAL LAND SURVEYOR
CLINTON ANTHONY CARROLL
1777
OKLAHOMA

AREA KEY

Permanent Electric Utility Line Easement

NEW Easement Area = 1.2784 Acres

LEGEND

New Right of Way to be purchased

Property Line

PARENT TRACT LEGAL

Part of the NE/4 of Section 6-7S-9E
Book 682, Page 237

SURVEYOR NOTES:

1. See Exhibit A for Legal Descriptions.

2. The Oklahoma State Plane South Zone was used as the basis of bearing for this legal description.

3. This map is for exhibit purposes only and not a boundary survey.

PID 11 Exhibit A
Permanent Electric Utility Easement
Owner: City of Durant
Bryan County, Oklahoma

Bearing Tree Land Surveying LLC
4201 N. Barnes Ave. Oklahoma City, Oklahoma 73112
Telephone: (405) 605-1081 Fax: (405) 605-1082
Certificate of Authority #4568 Renewal date 06/30/16
LAND SURVEYS • TOPOGRAPHIC SURVEYS

Revision Dates:
5/31/16
9/1/16

Agenda Item: 1.ad.

The City of Durant

Office of Projects Manager

Memorandum

Date:	9/9/2016
To:	Mayor and City Council
From:	Jacque J. Wilson, Projects Manager
Re:	Consider Approval of Temporary Electric Utility Line Pulling Easement for Parcel 11

Council Information / Action Requested

Consider Approval of Temporary Electric Utility Line Pulling Easement for Parcel 11

City Staff Information / Action Follow-up, if Council authorizes this action:

ATTACHMENTS:

Description	Type	Upload Date
Temporary Easement - 11_Pulling#1 & 11_Pulling#2 - City of Durant (FINAL)	Cover Memo	9/9/2016

TEMPORARY WORK SPACE EASEMENT

WORK ORDER NO. 1644886
Parcels: 11_Pulling#1 and 11_Pulling#2

KNOW ALL MEN BY THESE PRESENTS, that the City of Durant, hereinafter referred to as GRANTOR, for and in consideration of the sum of One Dollar ($1.00) and other good and valuable consideration paid by Oklahoma Gas and Electric Company, an Oklahoma corporation, hereinafter referred to as GRANTEE, the receipt of which is hereby acknowledged, do hereby grant, bargain, sell, and convey to said GRANTEE, its contractors and assigns, a temporary work space easement over, upon and across the following described real property situated in the County of Bryan, State of Oklahoma, to wit:

[See attached Exhibit "A" attached hereto and made a part hereof]

for the purpose of maintaining a temporary work space (hereinafter referred to as "easement premises") during the construction of GRANTEE's electrical facilities across the GRANTORS land identified as parcels # 11_Pulling#1 and 11_Pulling#2 Temporary Easement, and as shown on the attached Exhibit "A" together with the right of ingress and egress to and from the easement premises.

The GRANTEE agrees that the GRANTOR shall not be liable in any manner whatsoever for any damages or injuries to the GRANTEE or to the GRANTEE'S agents, servants or employees from whatsoever cause arising out of the use of the easement premises by the GRANTEE; and the GRANTEE agrees to indemnify and hold the GRANTOR harmless from and against such damages and injuries. The GRANTEE agrees to surrender possession of the easement premises upon the expiration of the term of this easement without notice and agrees to restore the property to a similar or better condition than existed prior to construction.

This temporary work space easement shall terminate when GRANTEE's construction project has been completed or by no later than December 31, 2017, whichever occurs first.

The consideration paid by the GRANTEE is received and accepted by the GRANTOR(S) in full satisfaction of every right hereby conveyed.

IN WITNESS WHEREOF, the GRANTOR(S) herein have hereunto caused these presents to be executed on this _____ day of _____, 2016.

_____ _____

ACKNOWLEDGMENT

STATE OF _____, COUNTY OF _____, SS:

On this _____ day of _____, 2016 , before me, a Notary Public within and for the County of _____, in the State of Oklahoma, duly commissioned and acting, appeared in person,_____ , to me personally well known as the persons whose names appear upon the within and foregoing instrument as the party Grantor and stated that they had executed the same for the consideration and purpose therein mentioned and set forth, and I do hereby so certify.

In Testimony Whereof, I have hereunto set my hand and seal of office as such Notary Public at the County and State aforesaid, on this _____ day of _____, 2016.

My Commission Expires: _____ _____
(SEAL) Notary Public

Commission No._____

CORPORATE /TRUST ACKNOWLEDGMENT

STATE OF _____, COUNTY OF _____, §:

Before me, the undersigned, a Notary Public, in and for said County and State, on this _____ day of _____, 2016, personally appeared _____, to me known to be the identical person who subscribed the name of the maker thereof to the foregoing instrument for _____, as its _____, and acknowledged to me that they executed the same as their free and voluntary act and deed of such_____, for the uses and purposes therein set forth.

My Commission Expires: _____ _____
(SEAL) Notary Public

Commission No._____

WO# 1644886

R 9 E

PID: 11_Pulling#1

Owner: City of Durant

Book 682 , Page 237

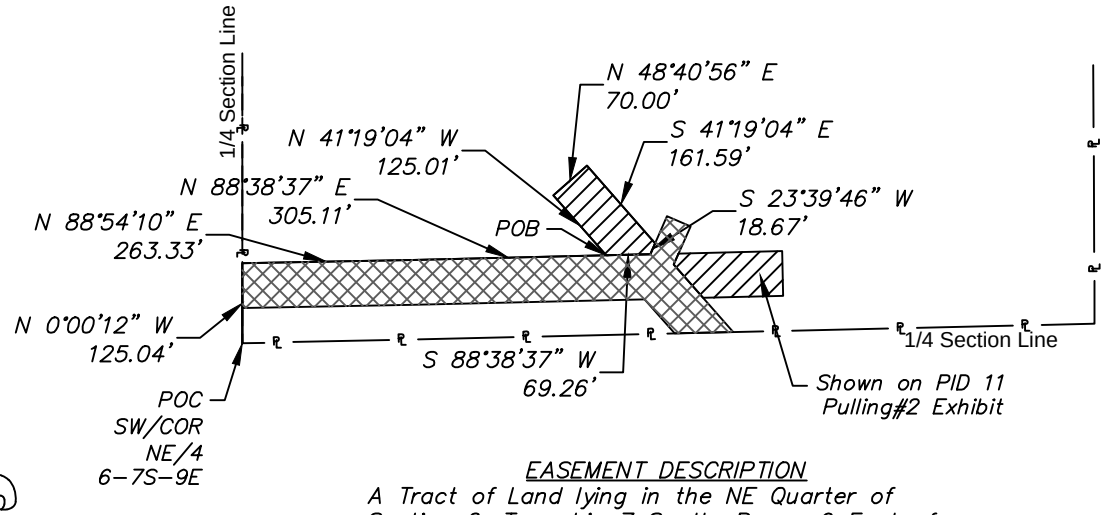

T 7 S

EASEMENT DESCRIPTION

A Tract of Land lying in the NE Quarter of Section 6, Township 7 South, Range 9 East of the I.M., Bryan County, Oklahoma, being more particularly described as follows:

COMMENCING at the SW Corner of said NE Quarter;
Thence N 00°00'12" W a distance of 125.04 feet;
Thence N 88°54'10" E a distance of 263.33 feet;
Thence N 88°38'37" E a distance of 305.11 feet to the POINT OF BEGINNING;
Thence N 41°19'04" W a distance of 125.01 feet;
Thence N 48°40'56" E a distance of 70.00 feet;
Thence S 41°19'04" E a distance of 161.59 feet;
Thence S 23°39'46" W a distance of 18.67 feet;
Thence S 88°38'37" W a distance of 69.26 feet to the POINT OF BEGINNING.

Said Tract contains 0.2437 acres or 10,617 square feet of new right of way more or less.

0 150 300 600

Scale: 1" = 300'

REGISTERED PROFESSIONAL LAND SURVEYOR
CLINTON ANTHONY CARROLL
1777
OKLAHOMA

AREA KEY

Temporary Pulling Easement

Easement Area = 0.2437 Acres

LEGEND

Permanent Electric Line Easement

Temporary Workspace Easement

Property Line

PARENT TRACT LEGAL

Part of the NE/4 of Section 6-7S-9E
Book 682, Page 237

SURVEYOR NOTES:

1. See Exhibit A for Legal Descriptions.

2. The Oklahoma State Plane South Zone was used as the basis of bearing for this legal description.

3. This map is for exhibit purposes only and not a boundary survey.

PID 11_Pulling#1 Exhibit A
Temporary Pulling Easement
Owner: City of Durant
Bryan County, Oklahoma

Bearing Tree Land Surveying LLC
4201 N. Barnes Ave. Oklahoma City, Oklahoma 73112
Telephone: (405) 605-1081 Fax: (405) 605-1082
Certificate of Authority #4568 Renewal date 06/30/16
LAND SURVEYS • TOPOGRAPHIC SURVEYS

Revision Dates:
9/1/16

WO# 1644886

R 9 E

PID: 11_Pulling#2

Owner: City of Durant

Book 682 , Page 237

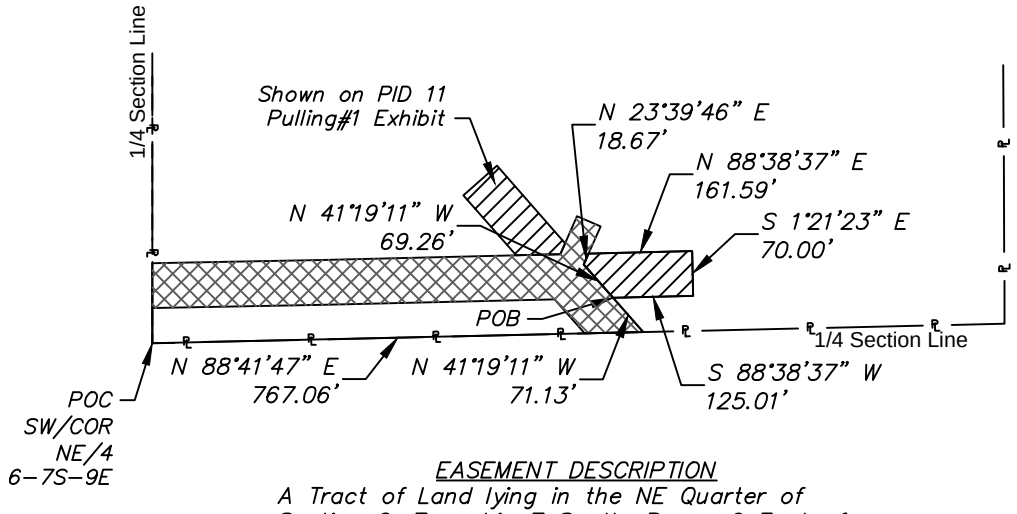

T 7 S

EASEMENT DESCRIPTION

A Tract of Land lying in the NE Quarter of Section 6, Township 7 South, Range 9 East of the I.M., Bryan County, Oklahoma, being more particularly described as follows:

COMMENCING at the SW Corner of said NE Quarter;
Thence N 88°41'47" E a distance of 767.06 feet;
Thence N 41°19'11" W a distance of 71.13 feet to the POINT OF BEGINNING;
Thence N 41°19'11" W a distance of 69.26 feet;
Thence N 23°39'46" E a distance of 18.67 feet;
Thence N 88°38'37" E a distance of 161.59 feet;
Thence S 01°21'23" E a distance of 70.00 feet;
Thence S 88°38'37" W a distance of 125.01 feet to the POINT OF BEGINNING.

Said Tract contains 0.2437 acres or 10,617 square feet of new right of way more or less.

0 150 300 600

Scale: 1" = 300'

REGISTERED PROFESSIONAL LAND SURVEYOR
CLINTON ANTHONY CARROLL
1777
OKLAHOMA

AREA KEY

Temporary Pulling Easement

Easement Area = 0.2437 Acres

LEGEND

Permanent Electric Line Easement

Temporary Workspace Easement

Property Line

PARENT TRACT LEGAL

Part of the NE/4 of Section 6-7S-9E
Book 682, Page 237

SURVEYOR NOTES:

1. See Exhibit A for Legal Descriptions.

2. The Oklahoma State Plane South Zone was used as the basis of bearing for this legal description.

3. This map is for exhibit purposes only and not a boundary survey.

PID 11_Pulling#2 Exhibit A
Temporary Pulling Easement
Owner: City of Durant
Bryan County, Oklahoma

Bearing Tree Land Surveying LLC
4201 N. Barnes Ave. Oklahoma City, Oklahoma 73112
Telephone: (405) 605-1081 Fax: (405) 605-1082
Certificate of Authority #4568 Renewal date 06/30/16
LAND SURVEYS • TOPOGRAPHIC SURVEYS

Revision Dates:
9/1/16

Agenda Item: 3.a.

The City of Durant

Office of City Clerk

Memorandum

Date:	9/1/2016
To:	Mayor and City Council
From:	Donnalla Miller, Acting City Manager
Re:	Consider Request for Funding by Big Five Community Services Inc. for SORTS Public Transportation Program and Take Possible Action

---

The City of Durant contributed $11,000 to Big Five Community Services, Inc. for the SORTS Public Transportation Program for FY 2013-2014. The City of Durant did not contribute to Big Five Community Services, Inc. for the SORTS Public Transportation Program during FY 2014-2015. However in November, 2015, the City of Durant contributed $22,000 in quarterly payments to Big Five Community Services, Inc. for the SORTS Public Transportation Program representing $11,000 for FY 2014-2015 and $11,000 for FY 2015-2016.

Big Five Community Services has submitted a request for renewal of funding in the amount of $22,000.

Council Information / Action Requested

Consider Request for Funding by Big Five Community Services Inc. for SORTS Public Transportation Program and Take Possible Action

City Staff Information / Action Follow-up, if Council authorizes this action:

Notify Big Five Community Services, Inc. of council decision.

ATTACHMENTS:

Description	Type	Upload Date
Letter - Funding Request	Exhibit	9/1/2016

BIG FIVE COMMUNITY SERVICES, INC.

1502 North 1st Ave.
DURANT, OKLAHOMA 74701
Phone: (580) 924-5331
Fax: (580) 920-2004

David Mordy
Chairman of the Board

Kent Watson
Executive Director

August 10, 2016

City Manager
City of Durant
P.O. Box 578
Durant, OK 74702

To Whom it may concern:

Last year the city of Durant resumed support for the public transportation program (SORTS) that had been suspended for the previous 2 years. Without that renewed support our transportation services would have had to reduce or even stop providing services to Durant community.

The past 3 years we have faced dramatic cuts in funding. Those cuts had an immediate effect on our ability to meet the vital transportation needs of Durant.

SORTS operations depend on Federal funds that can only be accessed by matching funds from the local level of 50%. This means that SORTS must get a local dollar to receive a Federal dollar. The loss of a single dollar of local match has a dollar for dollar loss of Federal funds. Even with the support we request, the cost of operations far exceed the funds we request from the city. We actively pursue other revenue streams to fill that gap, but even those are getting hit by the economic shortfalls of our state budget. Never before is your continued commitment more important than now.

SORTS has been a vital part of the city and its economic growth. We have been strong partners, and supporters of the city and want this to continue.

We, SORTS, have proven our worth and value to the city of Durant. We have an impact on the quality of life and the economy.

The demands on our services have increased by 40% in the past several years and cost of providing that service has increased as well. The people of Durant have come to depend on SORTS and they would suffer great hardship it these services would have to be reduced further. We are requesting renewal of that support of $22,000.00. The amount of services returned to the city is 10 fold for this investment and I encourage your support.

We are very grateful for the renewed support of last year but respectfully repeat the consequences of loss of your support will be the reduction or elimination of the transit services.
I would love to discuss the request with you personally before you present it to the city council and would love the chance to discuss my request at the council meeting.

It is the city's choice to participate and continue the relationship with SORTS that has been so beneficial to our residents and businesses. We want it to continue and grow but it cannot without your support.

Please contact my office if we can have lunch or if you have any questions

Sincerely,

Allen M. Leaird
SORTS
1502 N. First Ave.
Durant, Ok. 74701

Agenda Item: 3.b.

The City of Durant

Office of the Street Department

Memorandum

Date:	9/7/2016
To:	Mayor and City Council
From:	James Young Street Superintendent
Re:	Consider Recommendation To Remove East Bound Stop Sign From The Intersection of University and Cornell Drive

---

It is my recommendation to remove the east bound stop sign from the intersection of University and Cornell Dr. With the two new streets Anna'S Way and Claire's Court Intersecting from the South with stop signs and Cornell Dr. stopping from the North I believe the stop sign is not warranted.

Council Information / Action Requested

Consider recommendation to remove east bound stop sign from the intersection of University and Cornell Dr.

City Staff Information / Action Follow-up, if Council authorizes this action:

Street Department to remove stop sign

ATTACHMENTS:

Description	Type	Upload Date
Map	Cover Memo	9/7/2016
picture1	Cover Memo	9/7/2016
picture2	Cover Memo	9/7/2016

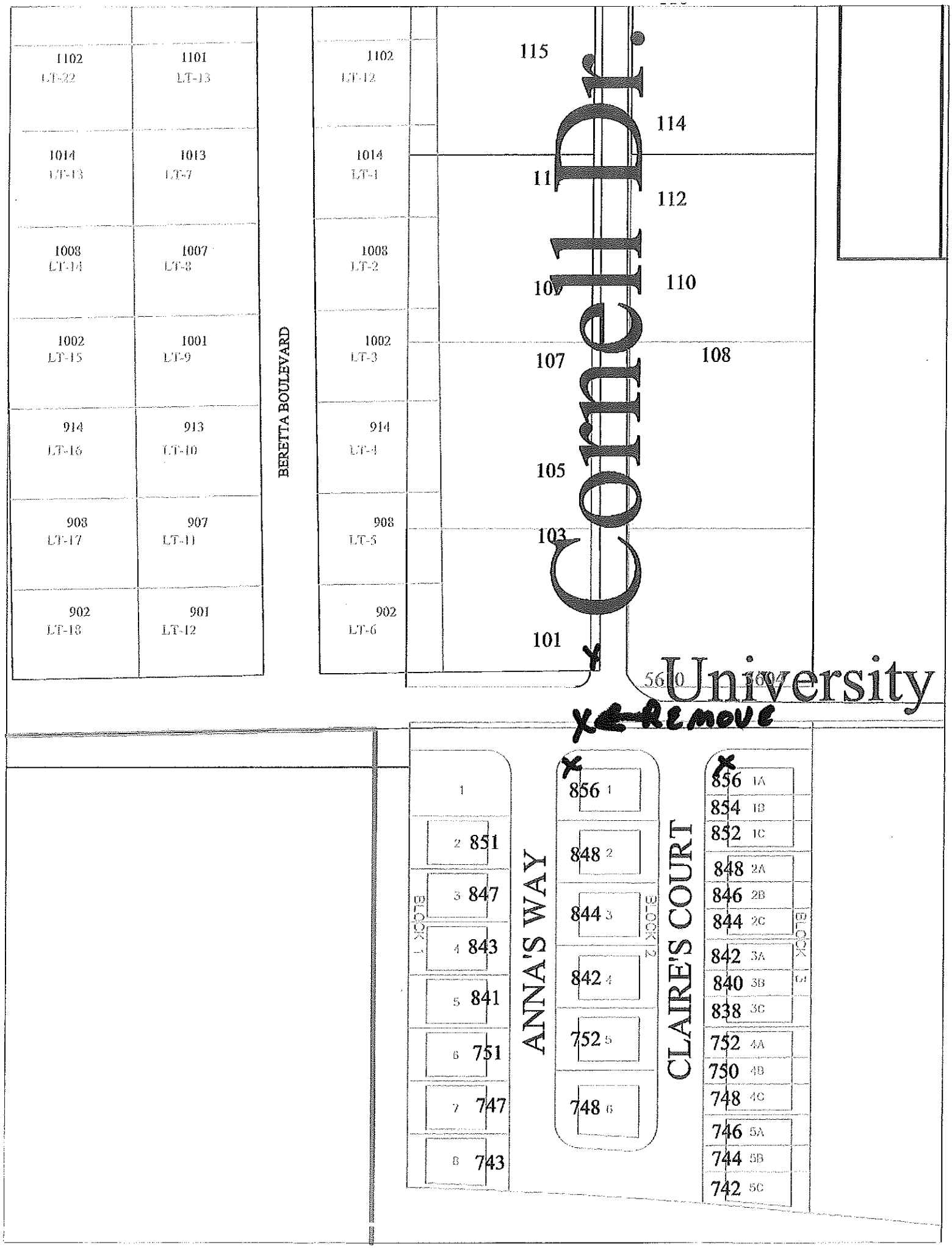
1102 LT-22
1101 LT-13
1014 LT-13
1013 LT-7
1008 LT-14
1007 LT-8
1002 LT-15
1001 LT-9
914 LT-16
913 LT-10
908 LT-17
907 LT-11
902 LT-18
901 LT-12
BERETTA BOULEVARD
1102 LT-12
1014 LT-1
1008 LT-2
1002 LT-3
914 LT-4
908 LT-5
902 LT-6
115
114
11
112
109
110
107
108
105
103
101
Cornell Dr.
University
REMOVE
1
2 851
3 847
4 843
5 841
6 751
7 747
8 743
BLOCK 1
ANNA'S WAY
856 1
848 2
844 3
842 4
752 5
748 6
BLOCK 2
CLAIRE'S COURT
856 1A
854 1B
852 1C
848 2A
846 2B
844 2C
842 3A
840 3B
838 3C
752 4A
750 4B
748 4C
746 5A
744 5B
742 5C
BLOCK 3

STOP
CORNELL DR
BLVD

UNIVERSITY
STOP

Agenda Item: 3.c.

The City of Durant

Office of City Clerk

Memorandum

Date:	9/9/2016
To:	Mayor and City Council
From:	Cynthia J. Price, City Clerk
Re:	Consider Approval of Ordinance 1807 Adopting Supplement 2016 S-8 to the Code of Ordinances for the City of Durant

---

The 2016 S-8 supplement to the City's Code of Ordinances accounts for local legislation through Ordinance 1791, passed 5-10-2016.

Council Information / Action Requested

Approval of Ordinance 1807 Adopting Supplement 2016 S-8 to the Code of Ordinances for the City of Durant

City Staff Information / Action Follow-up, if Council authorizes this action:

ATTACHMENTS:

Description	Type	Upload Date
Ordinance 1807	Ordinance	9/9/2016

ORDINANCE NO. 1807

AN ORDINANCE ENACTING AND ADOPTING A SUPPLEMENT TO THE CODE OF ORDINANCES FOR THE CITY OF DURANT AND DECLARING AN EMERGENCY

WHEREAS, American Legal Publishing Corporation of Cincinnati, Ohio, has completed the S-8 Supplement to the Code of Ordinances of the City of Durant, which supplement contains all ordinances of a general and permanent nature enacted since the prior supplement to the Code of Ordinances of this Political Subdivision; and

WHEREAS, it is necessary to provide for the usual daily operation of the municipality and for the immediate preservation of the public peace, health, safety and general welfare of the municipality that this ordinance take effect at an early date;

NOW, THEREFORE, BE IT ORDAINED BY THE MAYOR AND CITY COUNCIL OF THE CITY OF DURANT, OKLAHOMA:

Section 1. That the 2016 S-8 Supplement to the Code of Ordinances of the City of Durant as submitted by American Legal Publishing Corporation of Cincinnati, Ohio, and as attached hereto, be and the same is hereby adopted by reference as if set out in its entirety.

Section 2. Such supplement shall be deemed published as of the day of its adoption and approval by the Mayor and City Council and the Clerk of the City of Durant is hereby authorized and ordered to insert such supplement into the copy of the Code of Ordinances kept on file in the Office of the Clerk.

Section 3. This ordinance is declared to be an emergency measure necessary for the immediate preservation of the peace, health, safety and general welfare of the people of this municipality, and shall take effect at the earliest date provided by law.

PASSED AND ADOPTED by the Mayor and City Council of the City of Durant, Oklahoma this 13th day of September, 2016.

CITY OF DURANT

_____

Stewart Hoffman, Mayor

ATTEST:

_____

Cynthia J. Price, City Clerk

Agenda Item: 3.d.

The City of Durant

Office of Projects Manager

Memorandum

Date:	9/9/2016
To:	Mayor and City Council
From:	Jacque J. Wilson
Re:	Consider Approval of the Agreement for Services between the City of Durant and the Durant Main Street Board of Directors (C-2016-65)

The City of Durant seeks to partner with Durant Main Street (DMS) to provide programs for the development of the Main Street Designated District (also known as the Durant Central Business District) and accomplishing a Downtown Improvement Work Plan for the City of Durant.

DMS will coordinate with the City for mutually beneficial projects and activities that promote historic preservation, community development and economic growth of historic downtown Durant.

That it is the intention of both the City and DMS to work together primarily in an effort to encourage public and/or private commitments to strengthen and preserve the community's downtown.

Council Information / Action Requested

Consider Approval of the Agreement for Services between the City of Durant and the Durant Main Street Board of Directors

City Staff Information / Action Follow-up, if Council authorizes this action:

ATTACHMENTS:

Description	Type	Upload Date
C-2016-65	Exhibit	9/9/2016

AGREEMENT FOR SERVICES-FISCAL YEAR 2016-2017
BETWEEN THE CITY OF DURANT
AND THE DURANT MAIN STREET BOARD OF DIRECTORS

The City of Durant and the Durant Main Street program (DMS) agree as follows:

1. That the City of Durant seeks to partner with Durant Main Street to provide programs for the development of the Main Street Designated District (also known as the Durant Central Business District) and accomplishing a Downtown Improvement Work Plan for the City of Durant. These work plans and any other DMS projects will be detailed in an annual master work plan submitted to the City of Durant by May 1 of each year.

2. DMS will coordinate with the City for mutually beneficial projects and activities that promote historic preservation, community development and economic growth of historic downtown Durant.

3. That it is the intention of both the City and DMS to work together primarily in an effort to encourage public and/or private commitments to strengthen and preserve the community's downtown.

4. That DMS will provide the City of Durant an annual budget and quarterly financial statements including but not limited to an accounting of funds from other agencies supporting DMS efforts. Reports will be provided to Council quarterly to City Council.
5. That DMS will provide the following services modeled after the Nation Main Street Four Point Approach, as they apply to revitalizing the Main Street Designated District:

6. Promotion
    a. Enhance the image of downtown Durant
    b. Encourage consumers and investors to shop, live, work, and invest in downtown Durant through advertising, retail promotions, special events, and marketing campaigns
    c. Maintain and disperse an updated website and calendar of events for downtown Durant

7. Design
    a. Capitalize on downtown's historic buildings and street walkability to create an inviting atmosphere through attractive storefronts, window displays and streetscapes
    b. Promote good maintenance practices, rehabilitation of historic buildings, and appropriate new construction
    c. Facilitate a Façade Grant Program for downtown building improvements or renovations
    d. Coordinate and provide all seasonal and holiday décor for downtown Durant
    e. Utilize volunteers to sweep sidewalks and wash storefront windows quarterly

8. Economic Vitality
    a. Strengthen downtown Durant's economic assets while expanding and diversifying its economic base
    b. Recruit compatible new businesses and economic uses to make downtown more responsive to today's consumers
    c. Assist with the expansion of existing public or private businesses through professional development resources
    d. Conduct and update building inventories to encourage the conversion of underutilized commercial space into economically productive property
    e. Assist the City in obtaining federal, state, and private grants for community development related projects.

f. Direct downtown businesses to the proper authorities in relation to building codes, zoning districts, safety codes, business licensing requirements, tax requirements, financial incentives, etc.
g. Survey downtown businesses and consumers to determine if particular city ordinances need to be reevaluated or changed

9. Organization
    a. Assemble the necessary volunteer resources to carry out the Main Street mission
    b. Create a well-connected community of downtown businesses
    c. Develop a variety of methods to secure the financial resources necessary for continued revitalization of downtown Durant

10. The City will provide the following services within the Designated Main Street District:
    a. Maintenance
        i. Regularly scheduled trash collection from all receptacles
        ii. Regular prevention and removal of weeds, fire ants, and pests
        iii. Regular mowing of pocket park or any green spaces
        iv. Regular maintenance and replacement of mulch in flower beds
        v. Sufficient watering of hanging flower pots, potted plants, and all landscaping
        vi. Regular maintenance of outdoor power outlets in downtown to ensure they are in working order for holiday décor, etc.
        vii. Regular maintenance of street and sidewalk pavement and potholes
        viii. Regular maintenance of paint on street crosswalks
        ix. Regular maintenance of paint on downtown benches and trash receptacles
    b. Installation
        i. Installation and removal of any streetscape, seasonal, or holiday décor requiring a bucket truck or ladder
        ii. Budget City funds annually for new downtown beautification projects (FY2018)
        iii. Addition of power outlets on lamppost to enable holiday lights and other streetscape décor (FY2018)
        iv. Replacement of Historic Downtown Durant metal signs throughout the City and on highway exits with updated signs that reflect the new Main Street logo

11. That the City will pay DMS for services rendered, a fee of $26,000.00 for Fiscal Year 2016-2017 to be paid in equal quarterly installments in the amount of $6,500 per quarter commencing with the month of July 2016.

12. DMS funds a façade renovation program in the Central Business District to provide an incentive for businesses to beautify and renovate facades. In addition to the City's contribution of $26,000.00, the City of Durant shall match the façade renovation program up to $3,000.00 per year. (FY2018) Furthermore, any façade funding furnished by the City, which is unexpended during the FY 2016-2017 contract period, shall not be carried forward by DMS to the next fiscal year and thus forfeited. Reimbursements granted by the City during the 2016-2017 fiscal year will be made for façade renovations completed between July 1, 2016 and June 30, 2017. All reimbursement requests must be submitted to the City with itemized receipts before June 30, 2017.

13. DMS has outlined the following measurable goals to which we will remain accountable:
    a. Host a minimum of 10 promotional events benefitting downtown Durant
    b. Complete three new projects from the DMS Downtown Improvement Work Plan focused on Economic Vitality, Organization, and Design.
    c. Attend a minimum of 8 regularly scheduled City Council meetings

14. In the event that DMS exceeds the agreed upon measurable goals, the party is eligible to receive an additional $4,000.00 cash incentive from the City by August 1, 2018 to be used at the discretion of the DMS Board of Directors.

15. This agreement shall r commence August 18 2016 and terminating June 30, 2017. This Agreement may be renewed for an additional year following evaluation and negotiation prior to June 1, 2017.

16. Acknowledging that the City may not commit itself to any expenditure beyond its Fiscal Year, this agreement must be affirmatively ratified annually by the City of Durant by approving fees set forth herein in the City's annual budget, in which event, DMS shall have the option of either accepting or rejecting said increase/decrease and continuing or terminating this agreement.

17. This agreement may be terminated at any time by mutual agreement of the City and DMS. This agreement may further be terminated upon thirty (30) days written notice, by either party, for just cause.
18. This agreement shall be controlled by the laws of the State of Oklahoma and shall not be assigned without written consent of the parties hereto.

19. As a result of receiving municipal funding, Main Street agrees that it must follow the Open Meeting Act.

THIS AGREEMENT being dated and approved this __th day of September, 2016 in a regularly scheduled meeting of the Durant City Council.

CITY OF DURANT

_____

By: Stewart Hoffman, Mayor

ATTEST:

_____

Cynthia J. Price, City Clerk

THIS AGREEMENT being dated and approved this _____ day of September, 2016 by the Durant Main Street Board of Directors.

DURANT MAIN STREET
BOARD OF DIRECTORS

By: _____

President, Durant Main Street Board

ATTEST:

_____

Secretary, Durant Main Street Board

Agenda Item: 3.e.

The City of Durant

Office of City Clerk

Memorandum

Date:	9/9/2016
To:	Mayor and City Council
From:	Jacque Wilson, Projects Manager
Re:	Consider Approval of Government Services Administration (GSA) Lease

---

Attachment not available at time of posting. Please check back.

Council Information / Action Requested

Approve Government Services Administration (GSA) Lease

City Staff Information / Action Follow-up, if Council authorizes this action:

Agenda Item: 4.a.

The City of Durant

Office of Community Development

Memorandum

Date:	8/23/2016
To:	Mayor and City Council
From:	Marty Cook, Community Development Manager
Re:	Consideration Ordinance # 1800- Rezoning from C-2 Highway Commercial to R-2 Two-Family Residential

On July 25, 2016 John Massey, filed an application for the approval of a zoning change from Highway Commercial C-2 to Two- Family Residential R-2 for property located near Bryan Rd and University Blvd.

Staff has received 1 call concerning this request at the time of this memo.

The Planning Commission heard this case on August 16, 2016 and approved this request to rezone.

Council Information / Action Requested

To Approve or Deny

City Staff Information / Action Follow-up, if Council authorizes this action:

City Clerk to file Ordinance
Aaron Walkup to update City of Durant Zoning Map
Darla Smith to inform applicant of decision

ATTACHMENTS:

Description	Type	Upload Date
PC2016-04	Cover Memo	8/23/2016

REZONING APPLICATION

Petition # 2016-04
Fee $ 300.-

APPLICANT INFORMATION

Name: John Massey	Email: john@firstunitedbank.com	Phone #1
Mailing Address: 1400 W. Main		Phone #2
City: Durant State: OK	Zip: 74701	Fax #
Applicant's Interest in Property:		

__Please use attached addendum if there is more than one applicant.

Physical Address of Rezoning Request:			
__Platted ✓ Un-Platted	Subdivision	Lot	Block
Legal Description: (If Un-platted) Being 1.843 acres ± - See Exhibit A			

__ Deed Attached (required) If applicant is not owner listed on deed, owner consent must be included.

Request Rezoning From: C-2		Request Rezoning To: R-2	
Present Use: Vacant		Proposed Use: Residential - Condominium/ Duplex	
Parcel Width: ~320	Parcel Length: ~250	Acres: 1.843±	Street/Road Frontage: 50'

✓ City Water (If City Water will be extended or improvements will be made, please explain:)

✓ City Sewer (If City Sewer will be extended or improvements will be made, please explain:)

_____Private Water _____Private Sewer

Is Property in the Floodplain? NO	Is property in the Airport Zone. NO

The applicant has prepared this application and supporting documentation and certifies that the facts stated herein and exhibits attached hereto are true and correct.

John Massey
Signature of Applicant

7-21-16
Date

Office Use Only

Date Filed 7/25/16 Initial	Date Payment Received 7/25/16 Initial	Notification Mailed Date Initial	Comments
Proof of Publication Received Date Initial		Property Posting Verified Date Initial	Comprehensive Plan Recommendations
Staff Recommendation __Approve __Deny	PC Recommendation __Approve __Deny	City Council Action __Approve __Deny	Ordinance #

(Rev. 11/2006)

REZONING SUPPORTING INFORMATION

1. List the changed or changing conditions in the area or in the City which makes this zone change necessary.

This portion of a vacant tract is better suited to residential use, given its distance from the main thoroughfare, University Drive, and lack of frontage for commercial development

2. Indicate whether or not this zone change is in accordance with the Comprehensive Plan. If it is not, explain why the Plan is incorrect.

This zone change maintains the character of the overall plan and existing uses of adjoining property

3. List any other reasons to support this zone change.

The zoning of this property as R-3 will provide a reasonable buffer between adjacent commercial uses and existing single family uses to the South

THE CITY OF DURANT
Office of Community Development

DURANT
· OKLAHOMA ·

NOTICE OF PUBLIC HEARING PC2016-04

To Whom It May Concern:

On July 25, 2016 John Massey filed an application requesting the approval of a Re-zoning from Highway Commercial (C-2) District to Two-Family Residential (R-2) District for property located near Bryan Rd and University Blvd, Durant and more particularly described as;

A tract of land being a part of the S/2 of Section 30, Township 6 South, Range 9 East of the Indian Meridian and Baseline, in Bryan County, Oklahoma, being more particularly described by metes and bounds as follows:
Commencing at a cut "X" for the NW Corner of the SE/4 of said Section 30; Thence N 89°06'22" E, along the North line of the SE/4, a distance of 374.79 feet; Thence S 00°27'13" E a distance of 292.76 feet to the True POINT OF BEGINNING; Thence S 00°27'13" E a distance of 283.41 feet to a point on the Northerly line of University Park Subdivision; Thence N 73°56'26" W along the Northerly line of University Park Subdivision, a distance of 337.86 feet to the NW corner of University Park Subdivision; Thence N 27°47'53" E a distance of 141.87 feet; Thence S 89°00'37" W a distance of 227.98 feet to a point on the Highway Right-Of-Way line; Thence N 27°48'36" E along the Highway Right-Of-Way, a distance of 68.47 feet; Thence N 89°00'37" a distance of 452.34 fee back to the Point of Beginning. Containing 80260.897 Sq. Feet or 1.843 Acres, more or less.

Notice is hereby given that a Public Hearing will be held regarding the above-described application. The Durant Planning Commission will conduct the hearing in the Roscoe J. Hatfield Council Chambers of Durant City hall, 300 West Evergreen Street, Durant, Oklahoma at 5:30p.m. Tuesday August 16, 2016. Interested parties are encouraged to attend the Public Hearing and are invited to provide additional information as well as express concerns pertaining to said application.

Contingent upon the recommendation of the Durant Municipal Planning Commission, PC2016-04 will be considered by the Durant City Council during the regularly scheduled meeting in the Roscoe J. Hatfield Council Chambers, Durant City Hall, 300 West Evergreen Street, Durant, Oklahoma beginning at 6:00p.m. Tuesday, September 13, 2016.

Written comments and/or protest regarding this case may be submitted for the record by August 10, 2016. All written comments may be emailed to planning@durant.org or mailed to:

Community Development Department
P.O. Box 578
Durant, OK 74702

Sincerely,

Marty Cook
Interim Community Development Director

New Boundary PS1

LOT SPLIT PLAT

A PART OF THE S/2 OF SECTION 30, TOWNSHIP 6 SOUTH, RANGE 9 EAST
BRYAN COUNTY, OKLAHOMA

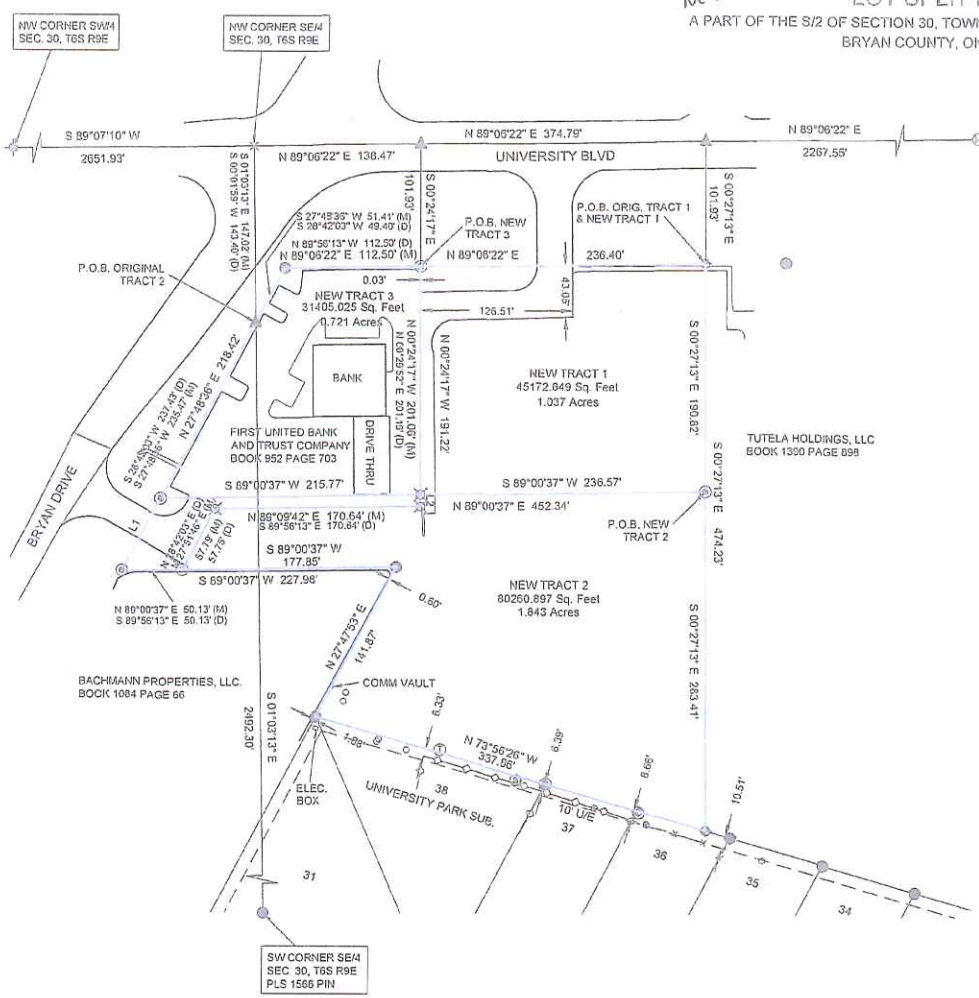

LEGEND

These standard symbols will be found in the drawing.

- BOUNDARY LINE
- FOUND 1/2" STEEL PIN
- SET 1/2" STEEL PIN (PLS 1819)
- SET MAG NAIL (PLS 1819)
- FOUND ALUMINUM CAP
- FOUND 1/2" STEEL PIN (PLS 392)
- FOUND 3/8" STEEL PIN
- CALCULATED POINT
- HIGHWAY RIGHT-OF-WAY
- CLEAN OUT
- SEWER MANHOLE
- TELEPHONE PEDESTAL
- FOUND CUT "X"
- FOUND MAG NAIL (PLS 1566)
- WOOD PRIVACY FENCE
- CHAIN LINK FENCE
- (D) RECORD DEED DATA
- (M) MEASURED FIELD DATA

VICINITY MAP (NOT TO SCALE)

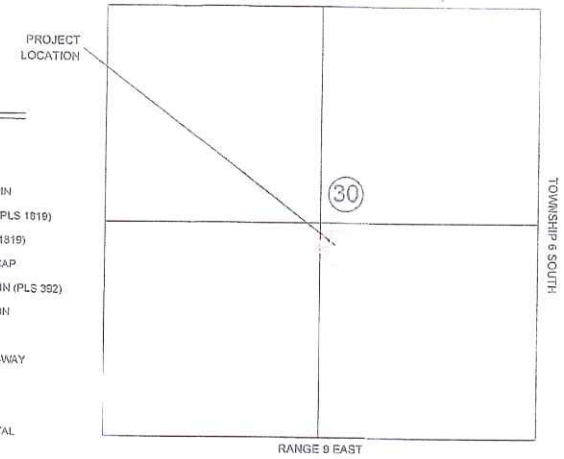

0' 100' 200

LINE	BEARING	DISTANCE
L1	N 27°48'36" E	68.47'
L2	N 00°24'17" W	9.84'

~BASIS OF BEARINGS~
OKLAHOMA STATE PLANE BEARINGS
(NAD 83)
CONTROLLING CORNERS ARE EXISTING MONUMENTS FOUND AT THE SECTION AND QUARTER SECTION CORNERS OF SECTION 30, TOWNSHIP 6 SOUTH, RANGE 9 EAST, BRYAN COUNTY, OKLAHOMA

7-18-16
DATE

B.J. McIninch P.L.S. #1819

GENERAL NOTES:

SUBJECT TO EASEMENTS AND/OR RIGHT-OF-WAY(S), EITHER RECORDED, OR IMPLIED, THEREOF.

THIS SURVEY PLAT WAS PREPARED FOR THE SOLE USE OF THE CLIENT(S), AND DOES NOT EXTEND TO ANY UNNAMED PERSON(S) WITHOUT PERMISSION FROM SAID CLIENT(S)

PORTIONS OF THIS PLAT ARE IN COLOR, PHOTO AND ELECTRONIC COPIES ARE NOT VALID. THIS IS NOT A VALID SURVEY PLAT WITHOUT THE SURVEYORS ORIGINAL SIGNATURE AND SEAL

THIS PLAT AND SURVEY MEETS THE OKLAHOMA MINIMUM STANDARDS FOR THE PRACTICE OF LAND SURVEYING AS ADOPTED BY THE OKLAHOMA STATE BOARD OF LICENSURE FOR PROFESSIONAL ENGINEERS AND LAND SURVEYORS.

BM SURVEYING, INC. COPYRIGHT 2016.

I-2016-688384 Book 1418 Pg 735
07/21/2016 1:26 pm Pg 0735-0736
Fee: $ 0.00 Doc: $ 0.00
Tammy Reynolds - Bryan County Clerk
State of Oklahoma

320 W. TWIN OAKS RD
CANEY, OKLAHOMA 74533
(580) 279-9544

BM SURVEYING, INC
CERTIFICATE OF AUTHORIZATION #7076
B.J. MCININCH - PROFESSIONAL LAND SURVEYOR - P.L.S. #1819

PROJECT: LOT SPLIT PLAT

FIELD COMP:	7-14-16 TO 7-18-16
LAST SITE VISIT:	7-18-16
PLAT COMP:	7-18-16
DRAWN:	BM
APPROVED:	BM

MASSEY INVESTMENT COMPANY

A PART OF THE S/2 OF SECTION 30
TOWNSHIP 6 SOUTH, RANGE 9 EAST
BRYAN COUNTY, OKLAHOMA

SCALE: 1" = 100' SHEET NO. 1 OF 2

Surveyor's Seal

LICENSED PROFESSIONAL LAND SURVEYOR
B.J. McININCH
7-18-16
1819
OKLAHOMA

Pg 2

LOT SPLIT PLAT

A PART OF THE S/2 OF SECTION 30, TOWNSHIP 6 SOUTH, RANGE 9 EAST
BRYAN COUNTY, OKLAHOMA

CERTIFICATE OF SURVEY

I, B.J. McIninch, a Licensed Professional Land Surveyor in the State of Oklahoma, do hereby certify that this Lot Split Plat, prepared under my direct supervision, accurately represents the following described tract of land to wit:

ORIGINAL LEGAL DESCRIPTIONS:

Tract 1 - A tract of land being a part of the S/2 of Section 30, Township 6 South, Range 9 East of the Indian Meridian and Baseline, in Bryan County, Oklahoma, being more particularly described by metes and bounds as follows:
Commencing at a cut "X" for the NW Corner of the SE/4 of said Section 30;
Thence N 89°06'22" E, along the North line of the SE/4, a distance of 374.79 feet;
Thence S 00°27'13" E a distance of 101.93 feet to the True POINT OF BEGINNING on the South Right-of-Way Line of University Blvd;
Thence S 00°27'13" E a distance of 474.23 feet to a point on the Northerly line of University Park Subdivision;
Thence N 73°56'26" W, along the Northerly line of University Park Subdivision, a distance of 337.86 feet to the NW corner of said University Park Subdivision;
Thence N 27°47'53" E a distance of 141.87 feet;
Thence S 89°00'37" W a distance of 177.85 feet;
Thence N 27°51'46" E a distance of 57.79 feet;
Thence N 89°09'42" E a distance of 170.64 feet;
Thence N 00°24'17" W a distance of 201.06 feet to a point on the South Right-of-Way Line of University Blvd;
Thence N 89°06'22" E, along the South Right-of-Way Line of University Blvd a distance of 236.40 feet back to the Point of Beginning.
Containing 120807.086 Sq. Feet or 2.773 Acres, more or less
The above legal description was prepared by B.J. McIninch PLS #1819 in the State of Oklahoma on July 18, 2016. The basis of bearings for the above tract of land is Oklahoma State Plane bearing of N 89°06'22" E along the North line of the SE/4 of Section 30, Township 6 South, Range 9 East, Bryan County, Oklahoma.

Tract 2 - A part of the NW/4 NW/4 SE/4 and a part of the NE/4 NE/4 SW/4 of Section 30, Township 6 South, Range 9 East, Bryan County, Oklahoma; BEGINNING at a point South 00 degrees 01 minutes 59 seconds West 143.40 feet from the Northwest corner SE/4 of Said Section 30 on Highway Right-of-way; Thence South 28 degrees 42 minutes 03 seconds West 237.43 feet along Right-of-way; Thence South 89 degrees 56 minutes 13 seconds East 50.13 feet; Thence North 28 degrees 42 minutes 03 seconds East 57.75 feet; Thence South 89 degrees 56 minutes 13 seconds East 170.64 feet; Thence North 00 degrees 29 minutes 52 seconds East 201.19 feet to the Highway Right-of-way; Thence North 89 degrees 56 minutes 13 seconds West 112.50 feet along Highway Right-of-way; Thence South 28 degrees 42 minutes 03 seconds West 49.40 feet along Highway Right-of-way to the Point of Beginning.

New Legal Description for Tract 1:

A tract of land being a part of the S/2 of Section 30, Township 6 South, Range 9 East of the Indian Meridian and Baseline, in Bryan County, Oklahoma, being more particularly described by metes and bounds as follows:
Commencing at a cut "X" for the NW Corner of the SE/4 of said Section 30;
Thence N 89°06'22" E, along the North line of the SE/4, a distance of 374.79 feet;
Thence S 00°27'13" E a distance of 101.93 feet to the True POINT OF BEGINNING on the South Right-of-Way Line of University Blvd;
Thence S 00°27'13" E a distance of 190.82 feet ;
Thence S 89°00'37" W a distance of 236.57 feet;
Thence N 00°24'17" W a distance of 191.22 feet to a point on the South Right-of-Way line of University Blvd;
Thence N 89°06'22" E, along the South Right-of-Way line of University Blvd, a distance of 236.40 feet back to the Point of Beginning.
Containing 45172.849 Sq. Feet or 1.037 Acres , more or less .
The above legal description was prepared by B.J. McIninch PLS #1819 in the State of Oklahoma on July 18, 2016. The basis of bearings for the above tract of land is Oklahoma State Plane bearing of N 89°06'22" E along the North line of the SE/4 of Section 30, Township 6 South, Range 9 East, Bryan County, Oklahoma.

New Legal Description for Tract 2:

A tract of land being a part of the S/2 of Section 30, Township 6 South, Range 9 East of the Indian Meridian and Baseline, in Bryan County, Oklahoma, being more particularly described by metes and bounds as follows:
Commencing at a cut "X" for the NW Corner of the SE/4 of said Section 30;
Thence N 89°06'22" E, along the North line of the SE/4, a distance of 374.79 feet;
Thence S 00°27'13" E a distance of 292.76 feet to the True POINT OF BEGINNING;
Thence S 00°27'13" E a distance of 283.41 feet to a point on the Northerly line of University Park Subdivision;
Thence N 73°56'26" W, along the Northerly line of University Park Subdivision, a distance of 337.86 feet to the NW Corner of University Park Subdivision;
Thence N 27°47'53" E a distance of 141.87 feet;
Thence S 89°00'37" W a distance of 227.98 feet to a point on the Highway Right-of-Way line;
Thence N 27°48'36" E, along the Highway Right-of-Way line, a distance of 68.47 feet;
Thence N 89°00'37" E a distance of 452.34 feet back to the Point of Beginning.
Containing 80260.897 Sq. Feet or 1.843 Acres, more or less
The above legal description was prepared by B.J. McIninch PLS #1819 in the State of Oklahoma on July 18, 2016. The basis of bearings for the above tract of land is Oklahoma State Plane Bearing of N 89°06'22" E along the North line of the SE/4 of Section 30, Township 6 South, Range 9 East, Bryan County, Oklahoma

New Legal Description for Tract 3:

A tract of land being a part of the S/2 of Section 30, Township 6 South, Range 9 East of the Indian Meridian and Baseline, in Bryan County, Oklahoma, being more particularly described by metes and bounds as follows:
Commencing at a cut "X" for the NW Corner of the SE/4 of said Section 30;
Thence N 89°06'22" E, along the North line of the SE/4, a distance of 138.47 feet;
Thence S 00°24'17" E a distance of 101.93 feet to the True POINT OF BEGINNING on the South Right-of-Way Line of University Blvd;
Thence S 00°24'17" E a distance of 191.22 feet;
Thence S 89°00'37" W a distance of 215.77 feet to a point on the Highway Right-of-Way line;
Thence N 27°48'36" E, along the Highway Right-of-Way line, a distance of 218.42 feet to a point on the Highway Right-of-Way line and the South Right-of-Way line of University Blvd;
Thence N 89°06'22" E, along the South Right-of-Way line of University Blvd, a distance of 112.50 feet back to the Point of Beginning.
Containing 31405.025 Sq. Feet or 0.721 Acres, more or less
The above legal description was prepared by B.J. McIninch PLS #1819 in the State of Oklahoma on July 18, 2016. The basis of bearings for the above tract of land is Oklahoma State Plane Bearing of N 89°06'22" E along the North line of the SE/4 of Section 30, Township 6 South, Range 9 East, Bryan County, Oklahoma

ACCEPTANCE BY CITY,

I, Marty Cook Director of the Department of Community Development of the City of Durant, Oklahoma, hereby certify that the said LOT SPLIT PLAT in the City of Durant, Oklahoma, is hereby accepted on behalf of the Durant Planning Commission. Action by the council of the City of Durant, Oklahoma is not required.

Signed by the Director of Community Development
this 21st day of July, 16

Director of Community Development

STATE OF OKLAHOMA
SS
County of Bryan

Before me, the undersigned, a notary public in and for said county and state on the 21 day of July, 2016, personally appeared _____ to me known to be the identical person who the name at the maker thereof to the foregoing instrument as its president, and duly acknowledge to me that he executed the same as his free and voluntary act and deed of such partnership for the uses and purposes therein set forth. Given under my hand and seal the day and year last written above.

My Commission Expires: 8-31-17

Darla R. Smith 7/21/16
Notary Public Date

DARLA R. SMITH NOTARY # 09007391 PUBLIC STATE OF OKLAHOMA

BRYAN COUNTY CLERK CERTIFICATE
State of Oklahoma
County of Bryan
This instrument was filed on the 21 day of July, 2016 at 1:26 and duly recorded in Book Number 1418, Page 736

Tammy Reynolds/HB
Bryan County Clerk

I-2016-688384 Book 1418 Pg 736
07/21/2016 1:26 pm Pg 0735-0736
Fee: $ 0.00 Doc $ 0.00
Tammy Reynolds - Bryan County Clerk
State of Oklahoma

COUNTY CLERK BRYAN COUNTY, OK

7-18-16
DATE

B.J. McIninch P.L.S. #1819

GENERAL NOTES:

SUBJECT TO EASEMENTS AND/OR RIGHT-OF-WAY(S), EITHER RECORDED, OR IMPLIED, THEREOF.

THIS SURVEY PLAT WAS PREPARED FOR THE SOLE USE OF THE CLIENT(S), AND DOES NOT EXTEND TO ANY UNNAMED PERSON(S) WITHOUT PERMISSION FROM SAID CLIENT(S)

PORTIONS OF THIS PLAT ARE IN COLOR, PHOTO AND ELECTRONIC COPIES ARE NOT VALID. THIS IS NOT A VALID SURVEY PLAT WITHOUT THE SURVEYORS ORIGINAL SIGNATURE AND SEAL

THIS PLAT AND SURVEY MEETS THE OKLAHOMA MINIMUM STANDARDS FOR THE PRACTICE OF LAND SURVEYING AS ADOPTED BY THE OKLAHOMA STATE BOARD OF LICENSURE FOR PROFESSIONAL ENGINEERS AND LAND SURVEYORS.

BM SURVEYING, INC. COPYRIGHT 2016.

320 W. TWIN OAKS RD CANEY, OKLAHOMA 74533 (580) 279-9544	**BM SURVEYING, INC** CERTIFICATE OF AUTHORIZATION #7076 B.J. McININCH - PROFESSIONAL LAND SURVEYOR - P.L.S. #1819		Surveyor's Seal
	PROJECT: LOT SPLIT PLAT		
FIELD COMP: 7-14-16 TO 7-18-16	MASSEY INVESTMENT COMPANY		
LAST SITE VISIT: 7-18-16	A PART OF THE SE/4 OF SECTION 30 TOWNSHIP 6 SOUTH, RANGE 9 EAST BRYAN COUNTY, OKLAHOMA		
PLAT COMP: 7-18-16			
DRAWN: BM			
APPROVED: BM	SCALE: 1" = 100'	SHEET NO. 2 OF 2	

LICENSED PROFESSIONAL LAND SURVEYOR B.J. McININCH 7-18-16 1819 OKLAHOMA

Zoning Map

Petition # 2016-04 - Bryan Dr

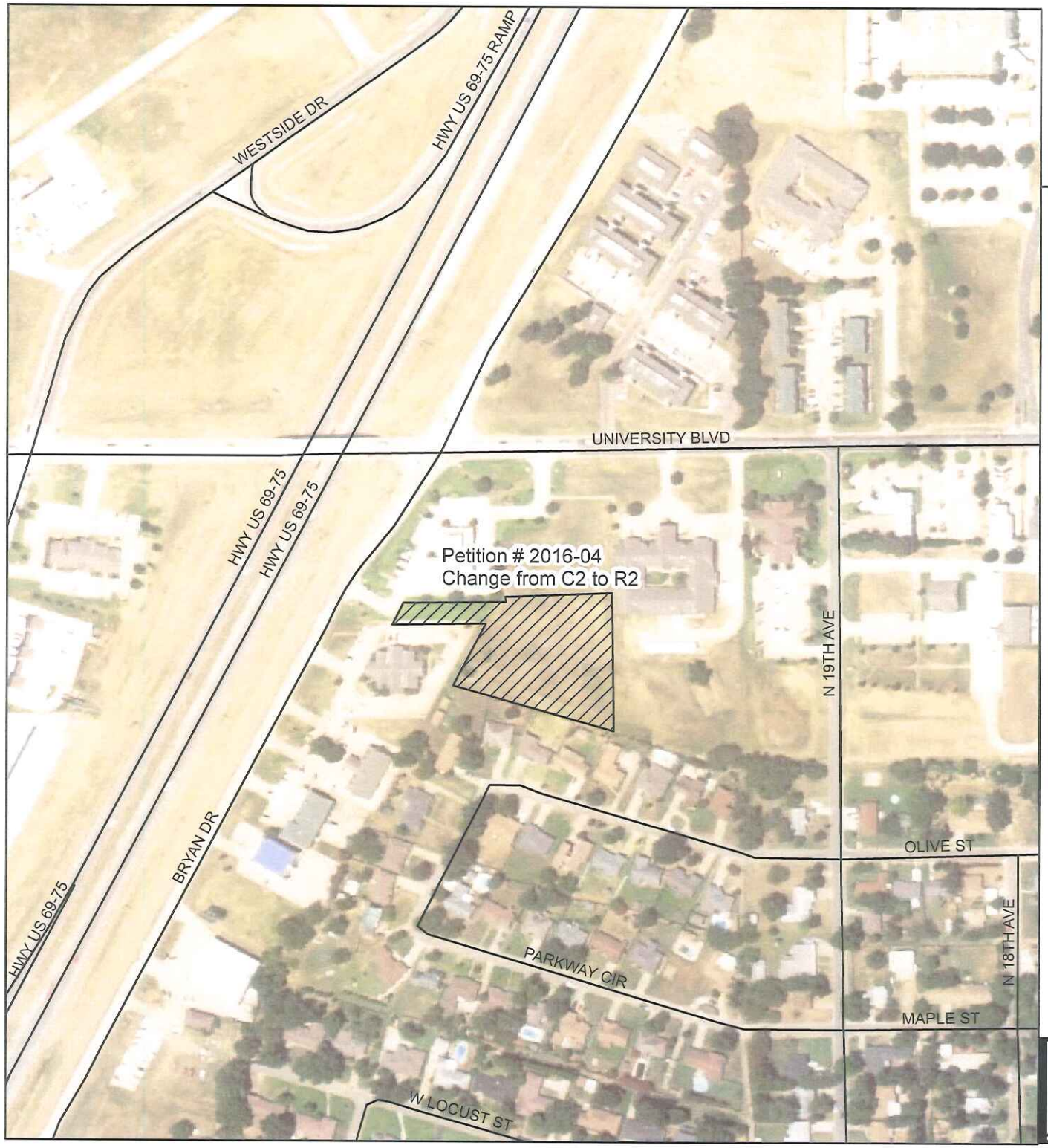

- A1 - Agriculture
- C0 - Professional and Business Office
- C1 - Convenient Commercial
- C2 - Highway Commercial
- C3 - General Commercial
- CBD - Central Business District
- H1 - Health Facilities
- I1 - Light Industrial
- I2 - Medium Industrial
- R1 - Single Family Residential
- R2 - Two Family Residential
- R3 - General Residential - Multi-Family

Use this map as a guide and not as definitive information. The information depicted by this map are provided for illustrative purposes only. Information such as (property ownership, acreage, property boundaries) are to be verified at the Bryan County Assessor's Office by the user. The burden for determining accuracey and/or correctness of information rest soley with the user. This map is provided "as is" with no warranties, expressed or implied.

City of Durant
Community Development

Printed: July 27, 2016

N
W E
S

Zoning Map

Petition # 2016-04 - Bryan Dr

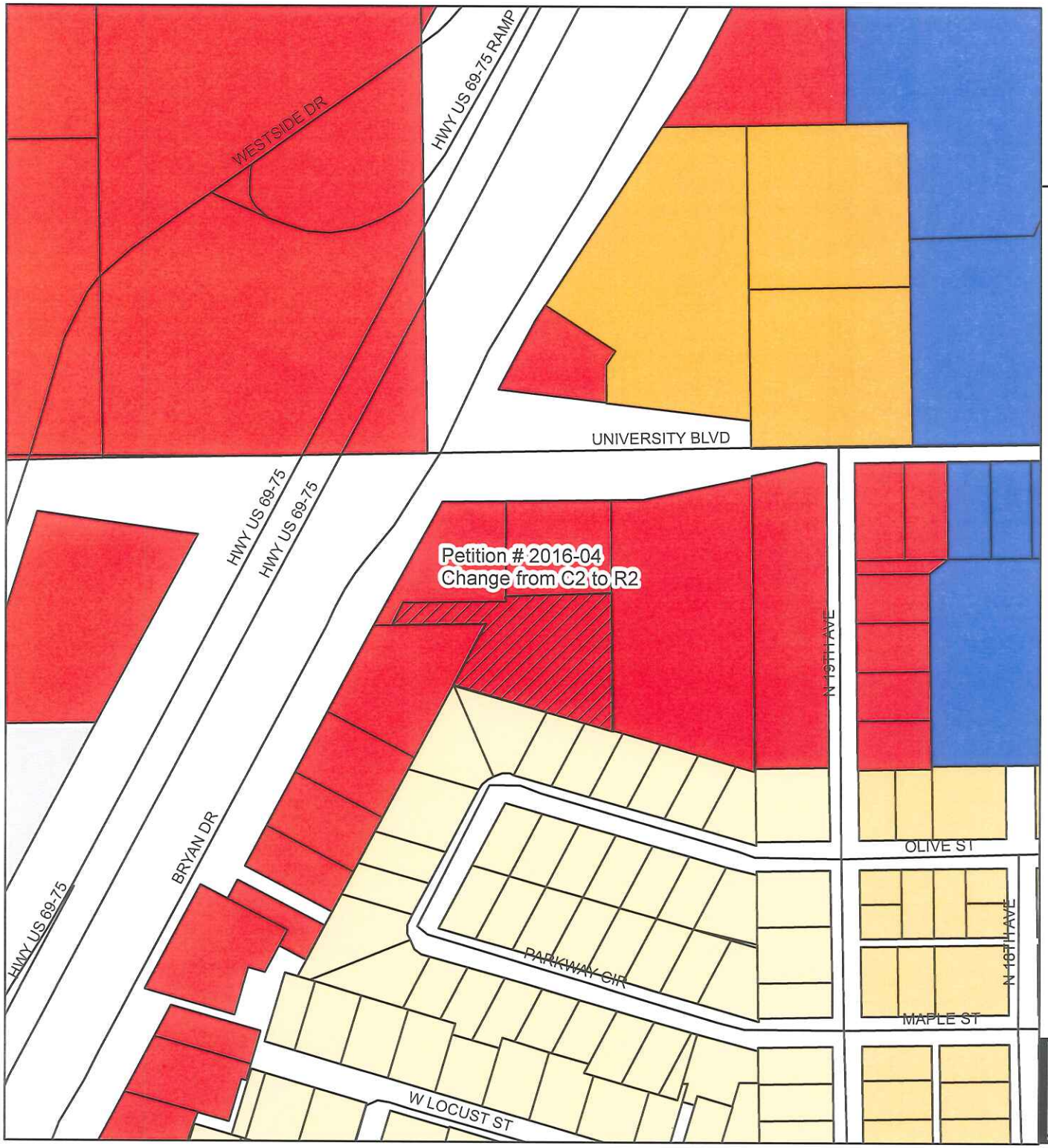

- A1 - Agriculture
- C0 - Professional and Business Office
- C1 - Convenient Commercial
- C2 - Highway Commercial
- C3 - General Commercial
- CBD - Central Business District
- H1 - Health Facilities
- I1 - Light Industrial
- I2 - Medium Industrial
- R1 - Single Family Residential
- R2 - Two Family Residential
- R3 - General Residential - Multi-Family

Use this map as a guide and not as definitive information. The information depicted by this map are provided for illustrative purposes only. Information such as (property ownership, acreage, property boundaries) are to be verified at the Bryan County Assessor's Office by the user. The burden for determining accuracy and/or correctness of information rest soley with the user. This map is provided "as is" with no warranties, expressed or implied.

City of Durant
Community Development

Printed: July 27, 2016

N
W E
S

Exhibit 30 - Future Land Use

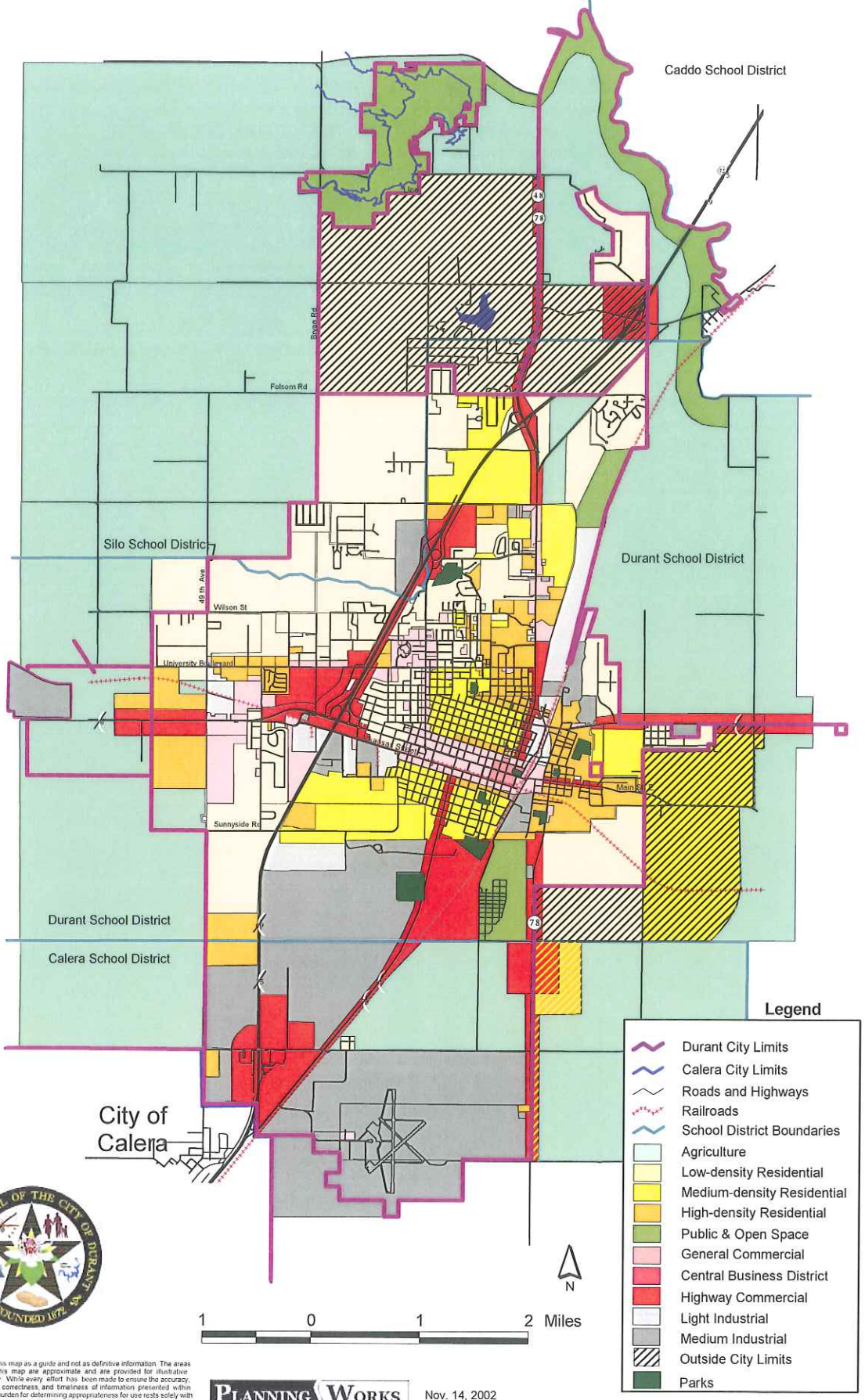

Please use this map as a guide and not as definitive information. The areas depicted by this map are approximate and are provided for illustrative purposes only. While every effort has been made to ensure the accuracy, completeness, correctness, and timeliness of information presented within this map, the burden for determining appropriateness for use rests solely with the user. This map is provided "as is" with no warranties, express or implied.

PLANNING WORKS

Nov. 14, 2002

source: City of Durant

ORDINANCE NO. 1800

AN ORDINANCE AMENDING THE ZONING MAP OF THE ZONING CODE AND DECLARING AND EMERGENCY

BE IT ORDAINED BY THE COUNCIL OF THE CITY OF DURANT, OKLAHOMA

SECTION 1. That the zoning map is hereby amended as to replace the Highway Commercial "C-2" District with the Two-Family Residential "R-2" District for the following described real property:

A tract of land being a part of the S/2 of Section 30, Township 6 South, Range 9 East of the Indian Meridian and Baseline, in Bryan County, Oklahoma, being more particularly described by metes and bounds as follows:
Commencing at a cut "X" for the NW Corner of the SE/4 of said Section 30; Thence N 89°06'22" E, along the North line of the SE/4, a distance of 374.79 feet; Thence S 00°27'13" E a distance of 292.76 feet to the True POINT OF BEGINNING; Thence S 00°27'13" E a distance of 283.41 feet to a point on the Northerly line of University Park Subdivision; Thence N 73°56'26" W along the Northerly line of University Park Subdivision, a distance of 337.86 feet to the NW corner of University Park Subdivision; Thence N 27°47'53" E a distance of 141.87 feet; Thence S 89°00'37" W a distance of 227.98 feet to a point on the Highway Right-Of-Way line; Thence N 27°48'36" E along the Highway Right-Of-Way, a distance of 68.47 feet; Thence N 89°00'37" a distance of 452.34 fee back to the Point of Beginning. Containing 80260.897 Sq. Feet or 1.843 Acres, more or less.

SECTION 2. For the immediate preservation of the peace, health, and safety of the City of Durant, Oklahoma and the inhabitants thereof, it is necessary that this ordinance shall become operative and go into effect immediately upon its passage, approval and publication.

PASSED AND APPROVED by the Mayor and City Council of the City of Durant this 13th day of September, 2016.

_____
Stewart Hoffman, Mayor
City Of Durant, Oklahoma

ATTEST:

_____
Cynthia Price, City Clerk

Agenda Item: 5.a.

The City of Durant

Office of City Treasurer

Memorandum

Date: 8/17/2016
To: Mayor and City Council
From: An-Chen Lai, City Treasurer
Re: Financial Statements - July 2016

Departmental Reports for July 2016

1. General Fund
2. Capital Improvement Fund
3. Durant City Utilities Authority Fund

Council Information / Action Requested

City Staff Information / Action Follow-up, if Council authorizes this action:

ATTACHMENTS:

Description	Type	Upload Date
July 2016 Fin Stmt Gen Fund	Cover Memo	8/17/2016
July 2016 Fin Stmt Cap Imp	Cover Memo	8/17/2016
July 2016 Fin Stmt DCUA	Cover Memo	8/17/2016

City of Durant, Oklahoma
General Fund - UNAUDITED

Monthly Revenue and Expense Report
JULY 2016 - 8.33% of Fiscal Year Lapsed

Revenue Type:	This Period	Year-To-Date	Current FY15/16 Budget **
Sales Tax (2%)	564,234.63	564,234.63	7,000,000
Use Tax	81,270.21	81,270.21	850,000
Alcoholic Beverage Tax	9,882.53	9,882.53	110,000
Tobacco Excise Tax (first receipt Feb 2005)	14,581.53	14,581.53	170,000
Telephone Franchise Tax	183.10	183.10	18,000
Electric Service Franchise Tax	54,771.42	54,771.42	625,000
Natural Gas Franchise Tax	3,113.52	3,113.52	60,000
Cable TV Service Franchise Tax	-	-	85,000
Vehicle Tax	9,543.41	9,543.41	120,000
Gasoline Excise Tax	3,515.46	3,515.46	30,000
Licenses - All Types	5,590.00	5,590.00	41,000
Permits - All Types	13,607.00	13,607.00	233,500
Swimming Pool Revenues	19,976.25	19,976.25	46,000
Reimb. Engineering & Publication Fees	-	-	1,500
Sidewalk & Curb Repair Fees	1,349.00	1,349.00	10,000
Police Bonds & Fines	25,483.15	25,483.15	342,600
Interest Earnings	403.82	403.82	3,000
Civil Defense Reimbursement - County/State	-	-	65,000
Grant Revenues	5,122.02	5,122.02	27,825
Miscellaneous Revenues	113,475.06	113,475.06	201,052
Sub-Total Revenues	**926,102.11**	**926,102.11**	**10,039,477**
Transfer from Utility Authority	244,524.00	244,524.00	2,934,288
Subtotal Current Year Receipts	**1,170,626.11**	**1,170,626.11**	**12,973,765**
Balance Forward from FY15 (unaudited)	N/A		2,759,496
Total General Funds Available	***1,170,626.11***	***1,170,626.11***	***15,733,261***

Expense Type:	Month	Year-To-Date	Current FY15/16 Budget **
City Administration	28,651.72	28,651.72	561,185
City Clerk	9,633.93	9,633.93	147,117
City Treasurer	15,678.36	15,678.36	165,950
Legal Services - Attorney	194.21	194.21	88,800
Law Enforcement - Police Dept	287,947.80	287,947.80	4,787,081
Animal Control	6,093.60	6,093.60	107,192
Finance Dept	13,385.23	13,385.23	212,593
Fire Dept	185,866.97	185,866.97	3,020,889
Parks, Rec & General Services	92,042.42	92,042.42	943,506
Swimming Pool	31,200.84	31,200.84	104,225
Municipal Court	7,178.43	7,178.43	165,826
Community Development	25,679.59	25,679.59	470,887
Public Library	47,792.09	47,792.09	673,125
Street Department	58,892.33	58,892.33	907,686
Civil Emergency Mgmt	17,566.51	17,566.51	291,774
General Government	48,723.49	48,723.49	554,020
City Garage	22,756.11	22,756.11	319,456
Senior Citizens Center	1,261.51	1,261.51	22,750
Sub-Total Operating Expenses	**900,545.14**	**900,545.14**	**13,544,062**
Expense Type:	**Month**	**Year-to Date**	**FY15/16 Budget ****
Transfer to Insurance Cash Fund	6,702.83	6,702.83	80,434
Transfer to Risk Management Fund	5,000.00	5,000.00	60,000
Transfer to Cemetery Operations Fund	6,585.00	6,585.00	79,020
Transfer to Beautification	583.33	583.33	7,000
Transfer to Holiday Lighting	416.67	416.67	5,000
Sub-total of Transfer Expenses	**19,287.83**	**19,287.83**	**231,454**
Total Expenses	**919,832.97**	**919,832.97**	**13,775,516.00**
Reserve - Personal Services (Payroll)	**-**	**-**	**1,957,745**
General Fund Expense Totals:	***919,832.97***	***919,832.97***	***15,733,261***
Net Gain / (Loss) - *Excluding Balance Forward*	**250,793.14**	**250,793.14**	**0**

City of Durant, Oklahoma
Capital Improvements Fund - UNAUDITED

Monthly Revenue and Expense Report
JULY 2016 - 8.33% of Fiscal Year Lapsed

Revenue Type:	This Period	Year-To-Date	Current FY15/16 Budget **
Interest Earnings	65.26	65.26	500.00
Miscellaneous Revenues	0.00	-	0.00
FY17 FEMAHMPG REV EOC INTE	0.00	-	38,500.00
NEA GRANT REV S 9TH ARTS DIST	0.00		50,000.00
C OF C CONTRIB S 9TH ARTS	0.00	-	25,000.00
FY17 LANDWATER GRANT	0.00		182,900.00
FY17 FIRE TAX REV NEW TRUCK	0.00	-	37,000.00
FAA GRANT REV ODALS FY16	0.00	-	268,375.00
FAA GRANT ENG R17-35 REHAB	0.00		273,578.00
FAA GRANT R17-35 REHAB CON	0.00		2,243,056.00
FAA GRANT ENG R17-35	0.00		426,061.00
Reimbursements Rev.	0.00		0.00
Equipment Financing	0.00	-	1,053,953.00
Sub-Total Revenues	**65.26**	**65.26**	**4,598,923.00**
Transfer from General Fund		-	0.00
Transfer from 1%S.T.Rev.Fund	7,043.39	7,043.39	508,854.00
Transfer from Utility Authority	188,763.00	188,763.00	2,265,153.00
Transfer from DCFA Fund(DMSC MISC)	4,310.20	4,310.20	0.00
Transfer from 110 Crawford St	-	-	0.00
Transfer from DCFA Fund(DMSC TRAILS MT(	-	-	0.00
Transfer from DCUA 2010 STRN	37,208.41	37,208.41	580,337.00
Transfer from DCUA 2012A STRN	-	-	1,101,759.00
Transfer from DCFA Fund(DMSC Projetct)	-	-	0.00
Subtotal Current Year Receipts	**237,390.26**	**237,390.26**	**9,055,026.00**
Balance Forward from FY16 (Unaudited)	N/A	-	36,113.00
Total Capital Improvememt Availabl	***237,390.26***	***237,390.26***	***9,091,139.00***

Expense Type:	Month	Year-To-Date	Current FY15/16 Budget **
Law Enforcement - Police Dept	0.00	0.00	141,000.00
Animal Control	0.00	0.00	150,000.00
Fire Dept	0.00	0.00	54,000.00
Parks, Rec, & Gen Svcs	55.52	55.52	0.00
Swimmimg Pool	0.00	0.00	0.00
Street	0.00	0.00	248,000.00
Cival Emergency Management	0.00	0.00	38,500.00
General Government	129,207.76	129,207.76	966,769.00
Information Technology	0.00	0.00	118,113.00
City Garage	0.00	0.00	600,000.00
Water Sewer Line Maintenance	8,059.67	8,059.67	0.00
Water Treatment Plant	0.00	0.00	100,000.00
WasteWater Treatment Plant	0.00	0.00	584,519.00
Collection-Solid Waste	0.00	0.00	935,840.00
Disposal- Solid Waste	0.00	0.00	124,428.00
Eaker Field Airport	0.00	0.00	3,394,142.00
Multi-Sports Complex	0.00	0.00	0.00
2007 U.S.S.T.R.N. Exp.	0.00	0.00	0.00
2010 U.S.S.T.R.N. Exp.	0.00	0.00	563,309.00
2012A U.S.S.T.R.N. Exp.	0.00	0.00	1,042,647.00
Sub-Total Operating Expenses	**137,322.95**	**137,322.95**	**9,061,267.00**

Expense Type:	Month	Year-to Date	Current FY15/16 Budget
Transfer to General Fund	-	-	-
Transfer to UASF			
Transfer to DLA		-	-
Sub-total of Transfer Expenses	**-**	**-**	**-**
Total Expenses	**137,322.95**	**137,322.95**	**9,061,267.00**
Reserve - CI	-	-	**29,872**
Capital Improvement Expense Total	***137,322.95***	***137,322.95***	***9,091,139***
Net Gain / (Loss) - *Excluding Balance Forward*	**100,067.31**	**100,067.31**	**-**

MH 8/16/16

City of Durant, Oklahoma
Durant City Utilities Authority Fund 405 - UNAUDITED

Monthly Revenue and Expense Report
JULY 2016 - 8.33%% of Fiscal Year Lapsed

Revenue Type:	Month	Year-To-Date	Current FY15/16 Budget ***
Water Service - city-wide	295,221.59	295,221.59	3,281,000.00
Water Sales - RW Dist. #2	2,527.99	2,527.99	30,335.00
Water Sales - RW Dist. #5	44,149.15	44,149.15	667,000.00
Sewer Service Fees	250,025.40	250,025.40	2,409,781.00
Sanitation Service Fees	257,264.03	257,264.03	3,078,000.00
Sanitation - Rolloff Bins Revenue	79,989.32	79,989.32	1,230,000.00
Sanitation - Compactor Revenue	15,299.80	15,299.80	258,000.00
Landfill Gate Fees (excluding Xfer ST.)	41,589.50	41,589.50	265,000.00
Transfer Station Fees Revenue	13,775.91	13,775.91	430,000.00
Late Payment Penalties	12,061.91	12,061.91	100,000.00
Non Payment Fee	18,872.28	18,872.28	140,000.00
Water & Sewer Tap Fees	15,961.75	15,961.75	187,000.00
Interest Earnings	115.68	115.68	1,500.00
Interest Earnings in 2007 USSTRN Proj. Acct.	106.63	106.63	-
Lab Tests Revenue	967.50	967.50	29,000.00
Recyclable Products SW Disposal	-	-	4,500.00
Miscellaneous Revenues	10,625.54	10,625.54	150,250.00
Sub-Total Operating Revenues	**1,058,553.98**	**1,058,553.98**	**12,261,366.00**
Sub-Total All Current-Year Revenues	**1,058,553.98**	**1,058,553.98**	**12,261,366.00**
Balance Forward from FY15-16	N/A	-	1,989,780.00
Total DCUA Funds Available	**1,058,553.98**	**1,058,553.98**	**14,251,146.00**

Expense Type:	Month	Year-To-Date	Current FY15/16 Budget ***
Public Works Administration	1,335.06	1,335.06	68,906.00
Utility Billing	26,518.08	26,518.08	353,874.00
Water/Sewer Line Maintenance	48,062.19	48,062.19	1,017,629.00
Water Treatment Plant	66,351.19	66,351.19	1,069,962.00
Wastewater Treatment Plant	44,635.13	44,635.13	853,621.00
Solid Waste - Collections	63,523.52	63,523.52	1,093,454.00
Utility General Administration	2,533.56	2,533.56	402,069.00
Lake Durant	2,233.09	2,233.09	38,000.00
Solid Waste - Disposals	36,819.00	36,819.00	1,118,691.00
Sub-Total Operating Expenses	**292,010.82**	**292,010.82**	**6,016,206.00**
Transfer to INDUSTRIAL AUTH.	24,758.50	24,758.50	**349,959.00**
Transfer to INSURANCE CASH FUND	7,661.50	7,661.50	**91,938.00**
Transfer to IT SERVICE FUND			**5,022.00**
Transfer to GENERAL FUND	244,524.00	244,524.00	**2,934,288.00**
Transfer to RISK MANAGEMENT	5,000.00	5,000.00	**60,000.00**
Transfer to CAPITAL IMPROVEMENT FUND	188,763.00	188,763.00	**2,265,153.00**
Transfer to AIRPORT AUTHORITY	12,702.50	12,702.50	**152,430.00**
Transfer to DMSC	36,396.50	36,396.50	**436,758.00**
Transfer to 911 FUND	30,343.08	30,343.08	**364,117.00**
Transfer to 1/4% ST ECON DEV			310,428.00
Transfer to DWRF MAINTENANCE FUND	6,666.67	6,666.67	**80,000.00**
Sub-Total Transfer Expenses	**556,815.75**	**556,815.75**	**7,050,093.00**
Total Operating Expenses	**848,826.57**	**848,826.57**	**13,066,299.00**
Reserve - Contingency	-	-	**1,184,847.00**
DCUA Fund Expense & Transfer Totals:	**848,826.57**	**848,826.57**	**14,251,146.00**
Net Gain / (Loss) - *Excluding Balance Forward*	**209,727.41**	**209,727.41**	-

Agenda Item: 5.b.

The City of Durant

Office of Community Development

Memorandum

Date: 8/23/2016
To: Mayor and City Council
From: Marty Cook, Community Development Manager
Re: Planning Commission Meeting Minutes - July 19, 2016

Council Information / Action Requested

City Staff Information / Action Follow-up, if Council authorizes this action:

ATTACHMENTS:

Description	Type	Upload Date
July 19, 2016 Planning Commission Minutes	Cover Memo	8/23/2016

Minutes of the Durant Municipal Planning Commission Special Meeting of Tuesday, July 19, 2016 Roscoe J. Hatfield, City Council Chambers, Durant City Hall

CALL TO ORDER:

Planning Commission Chairman Kevin Keener called the meeting to order at 5:40pm

INVOCATION:

Planning Commission Member Clint Whitehurst offered the invocation.

Roll Call:

Present:
Planning Commission Members: Kevin Keener, Herb Manning, Clint Whitehurst
Staff: Marty Cook, Darla Smith
Absent:
Planning Commission Members: Whitney Kerr, Eddie Wagoner

1. CONSIDERATION OF CASE PC2016-03

Marty Cook reviewed PC2016-03 with the planning commission members, the preliminary plat stating that we received 3emails and 2 citizen visits concerning this case.

Kevin Keener: Are any of the complaints directed at the plat itself.

Marty – No sir, The plat meets all the code requirements.

Marty Bryd – 1913 Oak Hill Rd, Very concerned about what could be placed on lots 3 – 6, stated that he Dr. has told them before that he would leave this area as a green space. Was also told that the second access off of Oak Hill would be for a delivery only that has not happened. More commercial would increase traffic and lower our property values, we are trying to protect our neighborhood, protect our safety. Please consider our needs.

Jeremy Elliott – 325 Red Fox Rd, I don't have a real problem with the plat. The plat does not show what added stress it will take on the utilities or where the power lines are going to be. This road is already narrow and will need to be widened. Has anyone checked into the residential restrictions and covenants?

Marty – The city does not enforce residential restrictions or covenants, we hold them to the City Code of Ordinances and the International Building Code. This is a preliminary plat which is not required to show utility placement.

Pat Phelps – I'm not sure that there are any covenants of a piece of unplatted land.

Dr. Wittington – I purchased the property from the original owner, there are no restrictions or covenants.

Ernie Sturch – Stated that all traffic should come off Delivery Lane, if not, Oak Hill Rd will need to be widen, and would like to see some type of screening.

Dr. Whittington – I am looking to build a small separate lab building and move my current lab into it. I need to move my radio station to better views of the towers.

The majority of traffic comes in on Delivery Lane; there are a few that do exit onto Oak Hill Dr.

I have no plans to do anything with those lots at this time, One of those is completely unuseable due to utility boxes and the fact that there is a large power line looking at coming into that area. In reality there probably won't be anything on these lots for that reason.

I spoke with my lawn and landscaping company and informed them that they were not to park on Oak Hill Rd when doing lawn care for me.

Motion was made by Commission Member Clint Whitehurst and seconded by Commission Member Herb Manning to approve the preliminary plat as presented
Motion carried by the following vote:
Aye: Kevin Keener, Herb Manning, Clint Whitehurst
Nay: None
Abstain: None

OLD BUSINESS:

NEW BUSINESS:

ADJOURNMENT:

Motion made by Commission Member Clint Whitehurst and seconded by Commission Member Herb Manning to adjourn.
Motion Carried by the following vote:
Aye: Keener, Manning, Whitehurst

The meeting was adjourned at 6:30pm

Agenda Item: 5.c.

The City of Durant

Durant Fire Department

Memorandum

Date: 8/30/2016
To: Mayor and City Council
From: Roger Joines Fire Chief
Re: Fire Department Monthly Report - August 2016

Council Information / Action Requested

City Staff Information / Action Follow-up, if Council authorizes this action:

ATTACHMENTS:

Description	Type	Upload Date
Fire Department Monthly Report August 2016	Cover Memo	9/8/2016

Durant Fire Department

Monthly Report

August 2016

Type of Response	Month	Year to Date	
	August	2016	2015
Medical Calls & Rescue	88	818	794
Motor Vehicle Accidents	17	111	59
Fire Related Calls	8	101	101
Smoke Investigation & False Alarms	17	84	77
Misc. (Lift Assist) (Odor Investigation) (Good Intent) (Cancelled En Route) (Service Calls)	22	187	163
Total Responses	**152**	**1301**	**1194**

Type of Service Performed	Month	Year to Date	
	August	2016	2015
Permits	32	244	235
Inspections	45	216	192
Plans Review	24	88	24
Smoke Alarm Installed	3	19	10
Public Education	0	11	4
Fire Investigations	2	21	18
Pre-Fire Plans	4	25	33
Total Services	**110**	**624**	**516**

Comments :

A Rope Technician II class was held at Kiamichi Career Tech Center in August which allowed for certification of firefighters and a refresher for those ff's already having this certification.

Hazardous Materials Operations refresher course was also held in August at the Fire Dept. This years refresher covered the various methods used in the production of illegal drugs and common chemicals found in clandestine drug labs.

Fire Officers from DFD traveled to Weatherford for a one day class on the Art of Reading Smoke. This class was designed to help the decision makers on fire scenes, make sound judgment calls based on smoke conditions from the structure. Approximately 600 firefighters from across the state were present for this class.

The firefighters selection exam was given and two firefighters are in the process to be hired. They will replace firefighters that have retired or quit.

Agenda Item: 5.d.

The City of Durant

Durant Police Department

Memorandum

Date: 8/30/2016
To: Mayor and City Council
From: David Houser, Chief of Police
Re: Police Department Monthly Report - July 2016

Please see/review attached reports

This month has been steeped in technology issues. We have accepted OMAG's proposal for GPS devices. They are all installed in the patrol cars which in turn feeds the mapping system on a trial product, GeoSafe which places dispatch capabilities in the car.

Council Information / Action Requested

Information Only

City Staff Information / Action Follow-up, if Council authorizes this action:

None

ATTACHMENTS:

Description	Type	Upload Date
Monthly Report Totals	Cover Memo	8/30/2016
Yearly Totals	Cover Memo	8/30/2016

Durant Police Department

3104 Carl Albert Drive
Durant, Ok 74701-5015
Phone 580-924-3737 Fax 580-924-8928
David Houser, Chief of Police

MONTHLY DEPARTMENTAL REPORT
July 2016

In accordance with the mandatory monthly report to the Oklahoma Bureau of Investigation and the Federal Uniform Crime Reporting system, the following offenses were reported

OFFENSES	July 2016	July 2015	YTD 2016
UCR PART 1 CRIMES			
Criminal Homicide	0	0	0
Forcible Rape	1	2	4
Robbery	0	0	4
Aggravated Assaults	9	4	32
Burglary	19	18	101
Larceny-Theft	74	55	415
Motor Vehicle Theft	1	3	16
Arson	0	0	3
UCR Part 1 Crimes - TOTAL	104	82	575
UCR PART 2 CRIMES			
Other Assaults (Simple)	8	16	108
**Forgery and Counterfeiting; Fraud; Embezzlement; Stolen Property-Buying, Receiving, Possessing;			
Vandalism; Weapons-Carrying, Possessing, etc; Prostitution and Commercialized Vice;			
Sex Offenses; Drug Abuse Violations; Gambling: Offenses Against the Family and Children;			
Driving Under the Influence; Liquor Laws; Drunkenness; Disorderly Conduct; Vagrancy;			
All Other Offenses (Warrant Arrests); Suspicion; Curfew and Loitering Laws; Runaways**			
***UCR Part 2 Crimes**-TOTAL*	228	230	1,521
TOTAL OFFENSES (UCR Part 1 & Part 2 Crimes)	340	328	2,204

Domestic Violence Cases	July 2016	July 2015	YTD 2016
This number is included in Part 1 Crimes- Aggravated Assaults & Part 2 Crimes-Simple Assaults	7	15	72

Durant Police Department

3104 Carl Albert Drive
Durant, Ok 74701-5015
Phone 580-924-3737 Fax 580-924-8928
David Houser, Chief of Police

MONTHLY DEPARTMENTAL REPORT
July 2016

ARRESTS	July 2016	July 2015	YTD 2016
UCR Part 1 Crimes	16	23	128
UCR Part 2 Crimes	114	147	768
Juvenile Crimes	1	5	58
TOTAL ARRESTS	131	175	954

EOD Actions	16	19	134

Emergency **O**rder of **D**etentions include the preparation of reports and affidavit to commit persons for an emergency mental health evaluation, having the officer stand by while the evaluation is conducted by a mental health professional, and then the transport to an approved state mental health institution for treatment. (Norman, McAlester, Ada or Sulphur)

MOTOR VEHICLE COLLISIONS	July 2016	July 2015	YTD 2016
Injury Accidents	8	13	72
Property Damage Accidents	26	26	269
Private Property Accidents	14	19	90
Fatality Accidents	0	1	3
TOTAL ACCIDENTS	48	59	434

CITATIONS	July 2016	July 2015	YTD 2016
Traffic Citations	214	362	2,297
Non-Traffic Citations	30	75	400
Warnings	109	113	1,020
DUI	9	12	71
TOTAL	362	562	3,788

Durant Police Department

3104 Carl Albert Drive
Durant, Ok 74701-5015
Phone 580-924-3737 Fax 580-924-8928
David Houser, Chief of Police

MONTHLY DEPARTMENTAL REPORT
July 2016

CALLS FOR SERVICE	July 2016	July 2015	YTD 2016
Durant Police Department	2,239	2,312	14,357
Bryan County*	2,029	1,860	13,380
TOTAL CALLS FOR SERVICE	4,268	4,172	27,737

*Bryan County *Calls for Service* include all calls received for any jurisdictions participating in the CAD System and contracting with the City of Durant for communication services: Achille PD; Bryan County Sheriff's Office; Bennington PD; Bokchito PD; Bryan County District Attorney's Office; Caddo PD; Calera PD; Choctaw Nation Tribal; Colbert PD; OHP; and SOSU PD

RESERVE HOURS	87	330	1,337.00
CHAPLAIN HOURS	12.25	23	125.5

ANIMAL CONTROL	July 2016	July 2015	YTD 2016
Calls for Service	224	161	1,155
Citations Issued	3	1	29
Adoptions	39	23	240

MONTHLY DEPARTMENT REPORT TOTALS

2016	>>>	>>>	>>>	MISC OFFENSES				<<<		<<<	<<<		>>> ARRESTS <<<					> COLLISIONS (MVC) <					>>> > CITATIONS < <<<					CALLS FOR SERVICE					>> ANIMAL CONTROL <<			
	MUR-DER	RAPE	ROB-BERY	ASSAULTS AGG	ASSAULTS SIMP	BURG B&E	LAR-CENY	MV THEFT	AR-SON	UCR PT 1	UCR PT 2	TOTAL OFF	DOM VIOL	UCR PT 1	UCR PT 2	JUV	TOTAL	EOD	INJU-RIES	PROP DAM	PRIV PROP	FATAL-ITIES	TOTAL	TRAF-FIC	NON-TRAF	WARN	DUI	TOTAL	DURANT	BRYAN CO	TOTAL	RESERVE HOURS	Chaplain Hours	CFS	CITA-TIONS	FEES COLL	ADOP-TIONS
JAN	0	0	1	3	9	11	50	3	0	68	222	299	6	19	138	7	164	20	7	40	14	0	61	261	62	126	11	460	1,802	1,691	3,493	295.0	21.75	119	2		31
FEB	0	1	1	5	17	8	55	1	1	72	227	316	11	14	118	18	150	12	12	40	13	0	65	445	69	246	10	770	1,869	1,757	3,626	200.0	14.25	133	2		26
MAR	0	0	0	2	25	10	50	3	1	66	196	287	13	14	113	6	133	22	14	51	19	0	84	373	73	134	10	590	2,073	1,895	3,968	143.5	22.25	181	11		46
APR	0	1	0	4	23	22	45	5	1	78	218	319	15	21	124	10	155	22	2	37	18	0	57	405	61	207	15	688	1,986	1,857	3,843	230.0	8.00	169	6		22
MAY	0	1	0	8	10	18	75	1	0	103	204	317	9	25	108	6	139	18	13	40	4	2	59	371	56	111	7	545	2,267	2,170	4,437	178.5	43.75	144	4		25
JUNE	0	0	2	1	16	13	66	2	0	84	226	326	11	19	53	10	82	24	16	35	8	1	60	228	49	87	9	373	2,121	1,981	4,102	203.0	3.25	185	1		51
JULY	0	1	0	9	8	19	74	1	0	104	228	340	7	16	114	1	131	16	8	26	14	0	48	214	30	109	9	362	2,239	2,029	4,268	87.0	12.25	224	3		39
AUG										0		0					0						0					0			0						
SEPT										0		0					0						0					0			0						
OCT										0		0					0						0					0			0						
NOV										0		0					0						0					0			0						
DEC										0		0					0						0					0			0						
Totals	0	4	4	32	108	101	415	16	3	575	1,521	2,204	72	128	768	58	954	134	72	269	90	3	434	2,297	400	1,020	71	3,788	14,357	13,380	27,737	1,337.0	125.50	1,155	29	$0	240

2015	>>>	>>>	>>>	MISC OFFENSES				<<<		<<<	<<<		>>> ARRESTS <<<					> COLLISIONS (MVC) <					>>> > CITATIONS < <<<					CALLS FOR SERVICE					>> ANIMAL CONTROL <<			
	MUR-DER	RAPE	ROB-BERY	ASSAULTS AGG	ASSAULTS SIMP	BURG B&E	LAR-CENY	MV THEFT	AR-SON	UCR PT 1	UCR PT 2	TOTAL OFF	DOM VIOL	UCR PT 1	UCR PT 2	JUV	TOTAL	EOD	INJU-RIES	PROP DAM	PRIV PROP	FATAL-ITIES	TOTAL	TRAF-FIC	NON-TRAF	WARN	DUI	TOTAL	DURANT	BRYAN CO	TOTAL	RESERVE HOURS	Chaplain Hours	CFS	CITA-TIONS	FEES COLL	ADOP-TIONS
JAN	0	2	0	1	9	16	73	3	0	95	245	349	7	25	120	6	151	21	9	36	9	2	56	422	62	62	9	555	2,247	1,730	3,977	248.5	13.50	123	0	$57	20
FEB	0	0	0	2	14	23	80	1	0	106	235	355	11	24	114	12	150	11	11	36	12	0	59	373	89	96	14	572	1,857	1,443	3,300	250.0	28.00	152	3	$162	21
MAR	0	0	0	1	17	20	97	4	2	124	243	384	8	32	138	10	180	12	5	42	15	1	63	148	90	91	6	335	1,957	1,875	3,832	284.5	27.75	160	12	$109	25
APR	0	0	0	6	15	23	75	5	0	109	216	340	12	27	119	6	152	20	12	32	13	0	57	163	70	67	6	306	1,950	1,991	3,941	306.5	16.25	117	5	$20	13
MAY	0	0	0	3	15	13	81	4	0	101	211	327	12	27	111	14	152	18	5	33	17	1	56	283	79	78	9	449	2,002	1,967	3,969	392.0	21.50	143	1	$17	15
JUNE	0	2	1	2	14	10	62	3	0	80	211	305	7	16	119	6	141	17	10	39	15	0	64	326	74	117	10	527	2,196	1,984	4,180	149.0	5.25	171	3	$0	27
JULY	0	2	0	4	16	18	56	3	0	83	230	329	15	23	147	5	175	19	13	26	19	1	59	362	75	113	12	562	2,312	1,860	4,172	330.0	23.00	161	1	$0	23
AUG	0	0	0	3	5	11	72	0	0	86	253	344	7	19	151	4	174	19	12	35	20	0	67	291	66	125	8	490	2,353	1,817	4,170	212.0	26.25	139	1	$0	25
SEPT	0	1	0	5	17	12	62	6	0	86	268	371	15	19	148	8	175	18	8	30	27	0	65	175	68	154	11	408	2,045	1,650	3,695	233.0	9.25	157	2	$0	20
OCT	0	0	2	2	19	17	98	5	0	124	220	363	12	25	109	10	144	22	18	39	13	0	70	250	53	134	6	443	1,783	1,621	3,404	291.0	20.50	164	9	$0	27
NOV	0	0	0	2	7	13	68	4	0	87	164	258	4	22	87	5	114	12	6	35	14	0	55	268	57	165	2	492	1,583	1,743	3,326	407.0	14.50	133	14	$0	31
DEC	0	1	0	5	12	9	59	4	1	79	182	273	8	26	96	4	126	16	15	36	16	0	67	222	56	186	9	473	1,556	1,587	3,143	408.0	25.75	135	10	$0	40
Totals	0	8	3	36	160	185	883	42	3	1,160	2,678	3,998	118	285	1,459	90	1,834	205	124	419	190	5	738	3,283	839	1,388	102	5,612	23,841	21,268	45,109	3,511.5	231.50	1,755	61	$365	287

MONTHLY DEPARTMENT REPORT TOTALS

2014	>>> MISC OFFENSES <<<													>>> ARRESTS <<<					> COLLISIONS (MVC) <					>>> > CITATIONS < <<<					CALLS FOR SERVICE					>> ANIMAL CONTROL <<			
	MUR-DER	RAPE	ROB-BERY	ASSAULTS AGG	ASSAULTS SIMP	BURG B&E	LAR-CENY	MV THEFT	AR-SON	UCR PT 1	MISC OFF	TOTAL OFF	DOM VIOL	FEL-ONIES	MISD	JUV	TOTAL	EOD	INJU-RIES	PROP DAM	PRIV PROP	FATAL-ITIES	TOTAL	TRAF-FIC	NON-TRAF	WARN	DUI	TOTAL	DURANT	BRYAN CO	TOTAL	RESERVE HOURS	Chaplain Hours	CFS	CITA-TIONS	FEES COLL	ADOP-TIONS
JAN	0	0	0	8	0	12	66	6	0	92	239	331	6	42	142	9	193	21	11	28	14	0	53	324	63	8	14	409	2,164	1,473	3,637	348.0		122	0	$188	28
FEB	0	0	0	2	0	12	77	3	0	94	184	278	5	50	79	11	140	11	10	43	16	0	69	169	57	7	8	241	1,748	1,374	3,122	259.5		103	4	$91	13
MAR	0	1	0	4	0	20	71	4	0	100	210	310	9	41	70	9	120	16	11	41	10	1	63	128	43	18	6	195	1,947	1,587	3,534	447.5		152	1	$154	22
APR	0	0	0	7	1	14	60	3	0	84	236	321	13	45	110	3	158	13	6	23	9	1	39	138	101	0	18	257	2,041	1,652	3,693	472.0		151	7	$50	15
MAY	0	1	2	3	1	28	71	6	1	112	257	371	9	53	129	9	191	13	5	46	13	0	64	291	97	43	13	444	2,322	1,907	4,229	459.5		113	0	$111	27
JUNE	0	1	0	4	15	16	65	7	0	93	257	365	10	51	137	6	194	13	6	32	7	1	46	112	63	7	8	190	2,060	1,671	3,731	246.5		93	1	$214	22
JULY	0	0	0	5	11	29	60	8	0	102	215	328	10	49	109	5	163	18	5	30	14	0	49	136	47	221	8	412	2,089	1,531	3,620	217.5		113	0	$70	24
AUG	0	1	1	4	18	29	67	7	0	109	250	377	9	60	126	6	192	7	9	30	11	0	50	175	86	332	15	608	1,938	1,578	3,516	425.0		87	0	$70	13
SEPT	0	2	1	10	9	16	85	4	0	118	207	334	5	10	154	4	168	14	10	50	18	0	78	182	75	368	10	635	1,965	1,529	3,494	340.0		112	2	$60	17
OCT	0	0	0	5	16	21	82	8	0	116	234	366	10	62	103	7	172	11	6	57	26	0	89	80	72	2	10	164	1,820	1,664	3,484	333.5		119	2	$74	19
NOV	0	0	0	5	8	13	50	3	0	71	201	280	8	44	98	4	146	17	16	41	11	0	68	157	58	278	7	500	1,643	1,587	3,230	188.5		96	0	$122	17
DEC	0	2	0	0	14	11	77	2	0	92	227	333	6	56	83	7	146	13	10	30	14	0	54	161	45	162	6	374	1,708	1,693	3,401	266.5		115	1	$64	19
Totals	0	8	4	57	93	221	831	61	1	1,183	2,717	3,994	100	563	1,340	80	1,983	167	105	451	163	3	722	2,053	807	1,446	123	4,429	23,445	19,246	42,691	4,004.0		**1,376**	**18**	**$1,268**	**236**

2013	>>> MISC OFFENSES <<<													>>> ARRESTS <<<					> COLLISIONS (MVC) <					>>> > CITATIONS < <<<					CALLS FOR SERVICE					>> ANIMAL CONTROL <<			
	MUR-DER	RAPE	ROB-BERY	ASSAULTS AGG	ASSAULTS SIMP	BURG B&E	LAR-CENY	MV THEFT	AR-SON		MISC OFF	TOTAL OFF	DOM VIOL	FEL-ONIES	MISD	JUV	TOTAL	EOD	INJU-RIES	PROP DAM	PRIV PROP	FATAL-ITIES	TOTAL	TRAF-FIC	NON-TRAF	WARN	DUI	TOTAL	DURANT	BRYAN CO	TOTAL	RESERVE HOURS	Chaplain Hours	CFS	CITA-TIONS	FEES COLL	ADOP-TIONS
JAN	0	1	1	10	9	20	64	4	1		180	290	9	50	128	6	184	10	11	34	11	1	57	277	40	144	6	467	1,705	1,390	3,095	564.5		114	1	$67	20
FEB	0	0	0	9	9	11	50	1	0		221	301	9	49	137	3	189	13	9	36	26	0	71	255	43	36	7	341	1,566	1,220	2,786	502.0		121	1	$213	27
MAR	0	0	1	20	12	25	73	2	1		188	322	11	54	111	6	171	13	10	32	11	0	53	271	32	52	7	362	1,705	1,584	3,289	424.0		164	1	$203	29
APR	0	0	2	16	13	32	63	4	1		208	339	12	35	115	4	154	18	10	40	13	0	63	203	27	21	4	255	1,658	1,428	3,086	506.5		185	1	$164	43
MAY	0	1	0	9	10	28	72	3	0		208	330	10	20	157	7	177	17	17	37	13	0	67	236	41	49	11	337	1,986	1,400	3,386	377.0		164	3	$105	27
JUNE	0	0	0	19	4	27	71	0	0		192	313	14	32	129	14	175	20	10	24	7	0	41	145	41	39	7	232	1,726	1,471	3,197	356.5		137	0	$189	33
JULY	0	3	0	11	8	14	84	5	0		164	289	9	54	121	3	178	25	12	35	17	0	64	144	46	35	10	235	1,906	1,475	3,381	491.5		123	0	$174	32
AUG	0	2	1	9	9	17	92	6	1		211	348	8	97	138	8	243	11	10	39	11	0	60	187	55	30	8	280	1,960	1,540	3,500	479.0		170	1	$192	29
SEPT	0	0	2	13	8	34	96	0	0		250	403	11	71	102	7	180	17	13	32	13	0	58	117	131	5	10	263	1,808	1,831	3,639	339.5		150	2	$67	26
OCT	0	1	1	5	9	27	69	6	0		237	355	10	47	108	4	155	23	16	23	16	0	55	48	57	2	5	112	1,607	1,504	3,111	402.5		140	1	$40	23
NOV	0	0	0	10	12	19	67	3	0		203	314	6	37	105	8	150	13	11	39	13	0	63	192	54	28	13	287	1,861	1,535	3,396	341.5		123	1	$105	18
DEC	0	2	2	17	3	23	58	5	0		195	305	8	26	109	11	146	10	10	44	13	0	67	138	47	25	5	215	1,755	1,451	3,206	411.5		85	1	$51	10
Totals	0	10	10	148	106	277	859	39	4		2,457	3,909	117	572	1,460	81	2,102	190	139	415	164	1	719	2,213	614	466	93	3,386	21,243	17,829	39,072	5,196.0		**1,676**	**13**	**$1,570**	**317**

MONTHLY DEPARTMENT REPORT TOTALS

2012	>>> MISC OFFENSES <<<										<<<	<<<		>>> ARRESTS <<<					> COLLISIONS (MVC) <					>>> > CITATIONS < <<<					CALLS FOR SERVICE					> ANIMAL CONTROL <			
	MUR-DER	RAPE	ROB-BERY	ASSAULTS AGG	ASSAULTS SIMP	BURG B&E	LAR-CENY	MV THEFT	AR-SON		MISC OFF	TOTAL OFF	DOM VIOL	FEL-ONIES	MISD	JUV	TOTAL	EOD	INJU-RIES	PROP DAM	PRIV PROP	FATAL-ITIES	TOTAL	TRAF-FIC	NON-TRAF	WARN	DUI	TOTAL	DURANT	BRYAN CO	TOTAL	RESERVE HOURS	Chaplain Hours	CFS	CITA-TIONS	FEES COLL	ADOP-TIONS
JAN	0	1	0	7	9	11	55	3	0		175	261	8	31	135	8	174	11	11	24	14	0	49	225	37	213	12	487	1,957	1,672	3,629	541.0		163	0	$342	28
FEB	0	0	0	3	4	10	43	2	0		203	265	4	29	115	2	146	10	8	27	12	0	47	230	31	178	12	451	1,752	1,348	3,100	580.0		181	2	$349	56
MAR	0	0	0	9	4	5	41	0	0		194	253	6	36	143	5	184	10	11	31	11	0	53	230	35	139	16	420	2,044	1,368	3,412	570.5		181	0	$224	51
APR	0	0	2	14	10	7	37	4	0		210	284	16	34	169	6	209	10	8	36	5	0	49	220	47	46	21	334	1,907	1,564	3,471	697.5		138	1	$463	19
MAY	0	1	1	9	12	17	37	3	1		215	296	9	32	132	7	171	9	9	33	9	0	51	145	27	34	13	219	1,852	1,643	3,495	845.0		127	0	$185	20
JUNE	0	0	0	19	14	15	53	3	0		158	262	12	35	109	7	151	8	12	34	11	0	57	200	27	93	9	329	1,925	1,555	3,480	914.5		164	1	$178	23
JULY	0	0	2	22	4	20	75	5	0		239	367	11	44	151	25	220	13	9	28	12	0	49	189	52	298	18	557	2,176	1,740	3,916	591.0		147	0	$158	28
AUG	0	4	1	19	4	22	67	0	0		214	331	9	41	142	6	189	17	12	38	15	0	65	128	45	54	5	232	1,804	1,468	3,272	547.5		167	0	$352	44
SEPT	0	2	0	16	9	17	54	3	1		209	311	9	50	164	8	222	10	14	39	17	0	70	297	73	12	8	390	1,968	1,406	3,374	514.5		177	1	$130	44
OCT	0	1	1	11	3	27	51	7	0		215	316	9	35	172	8	215	22	14	39	12	0	65	282	70	15	7	374	1,708	1,478	3,186	722.0		173	1	$316	30
NOV	0	1	1	7	12	21	66	3	0		184	295	9	44	160	12	216	8	16	25	20	0	61	206	58	55	8	327	1,646	1,438	3,084	479.0		124	2	$237	33
DEC	0	1	1	7	6	22	56	3	0		156	252	9	31	94	5	130	6	21	42	17	0	80	132	31	37	5	205	1,646	1,395	3,041	507.0		86	2	$20	15
Totals	0	11	9	143	91	194	635	36	2		2,372	3,493	111	442	1,686	99	2,227	134	145	396	155	0	696	2,484	533	1,174	134	4,325	22,385	18,075	40,460	7,509.5		1,828	10	$2,954	391

2011	>>> MISC OFFENSES <<<										<<<	<<<		>>> ARRESTS <<<					> COLLISIONS (MVC) <					>>> > CITATIONS < <<<					CALLS FOR SERVICE					> ANIMAL CONTROL <			
	MUR-DER	RAPE	ROB-BERY	ASSAULTS AGG	ASSAULTS SIMP	BURG B&E	LAR-CENY	MV THEFT	AR-SON		MISC OFF	TOTAL OFF	DOM VIOL	FEL-ONIES	MISD	JUV	TOTAL	EOD	INJU-RIES	PROP DAM	PRIV PROP	FATAL-ITIES	TOTAL	TRAF-FIC	NON-TRAF	WARN	DUI	TOTAL	DURANT	BRYAN CO	TOTAL	RESERVE HOURS	Chaplain Hours	CFS	CITA-TIONS	FEES COLL	ADOP-TIONS
JAN	0	3	1	4	14	14	46	3	1		149	235	8	43	168	4	215	11	8	15	41	0	64	428	40	109	22	599	1,625	1,680	3,305	646.5		187	0	$404	50
FEB	0	1	0	8	5	8	35	6	1		180	244	6	36	118	1	155	7	9	50	16	0	75	215	39	54	9	317	1,441	1,439	2,880	681.5		185	0	$310	51
MAR	0	0	0	7	18	18	39	5	0		260	347	17	41	157	6	204	6	13	38	14	0	65	199	40	95	19	353	1,722	1,676	3,398	758.5		228	1	$451	52
APR	0	2	1	6	17	17	25	2	0		259	329	10	29	164	9	202	7	13	49	20	0	82	224	42	69	17	352	1,633	1,568	3,201	1,043.0		166	3	$281	45
MAY	0	0	1	12	6	21	31	3	1		270	345	9	42	205	3	250	9	14	45	9	0	68	451	35	82	15	583	1,950	1,709	3,659	527.5		219	1	$272	58
JUNE	0	0	1	16	12	13	33	3	0		253	331	19	39	158	6	203	9	11	28	15	0	54	328	45	59	20	452	1,912	1,694	3,606	732.0		152	1	$124	32
JULY	0	2	2	11	12	15	41	5	0		173	261	17	30	113	2	145	12	10	30	19	0	59	370	24	83	6	483	1,832	1,849	3,681	379.5		191	1	$324	50
AUG	0	2	1	22	14	16	45	5	0		129	234	21	49	118	2	169	7	10	23	19	0	52	171	25	36	7	239	1,854	1,832	3,686	306.0		206	0	$340	49
SEPT	0	3	1	13	11	19	46	8	0		250	351	14	46	139	1	186	17	12	31	20	0	63	123	49	42	15	229	2,050	1,812	3,862	458.0		279	1	$466	39
OCT	0	6	1	6	8	26	57	4	0		229	337	10	42	159	6	207	4	10	35	16	0	61	148	45	112	16	321	2,068	1,749	3,817	523.5		194	1	$359	40
NOV	0	2	2	8	12	33	53	1	0		186	297	9	30	123	8	161	15	8	24	15	0	47	81	34	129	12	256	1,545	1,586	3,131	397.0		164	1	$362	59
DEC	0	1	0	13	11	23	52	2	0		189	291	15	29	126	9	164	11	11	43	17	0	71	135	42	85	8	270	1,512	1,713	3,225	597.0		162	0	$481	58
Totals	0	22	11	126	140	223	503	47	3		2,527	3,602	155	456	1,748	57	2,261	115	129	411	221	0	761	2,873	460	955	166	4,454	21,144	20,307	41,451	7,050.0		2,333	10	$4,174	583

MONTHLY DEPARTMENT REPORT TOTALS

2010	>>> MISC OFFENSES <<<												>>> ARRESTS <<<					> COLLISIONS (MVC) <					>>> > CITATIONS < <<<					CALLS FOR SERVICE					>> ANIMAL CONTROL <<			
	MUR-DER	RAPE	ROB-BERY	ASSAULTS AGG	ASSAULTS SIMP	BURG B&E	LAR-CENY	MV THEFT	AR-SON		MISC OFF	TOTAL OFF	DOM VIOL	FEL-ONIES	MISD	JUV	TOTAL	EOD	INJU-RIES	PROP DAM	PRIV PROP	FATAL-ITIES	TOTAL	TRAF-FIC	NON-TRAF	WARN	DUI	TOTAL	DURANT	BRYAN CO	TOTAL	RESERVE HOURS	Chaplain Hours	CFS	CITA-TIONS	FEES COLL	ADOP-TIONS
JAN	0	2	1	5	0	24	44	4	0		191	271	10	30	107	9	146	4	8	36	15	0	59	662					1,961	1,533	3,494	385.5		215	0	$326	14
FEB	0	1	0	14	1	4	30	1	0		250	301	13	25	96	4	125	7	11	38	17	0	66	284	50	245	15	594	1,796	1,520	3,316	573.0		188	3	$279	22
MAR	0	0	0	6	0	21	23	1	0		362	413	8	36	148	1	185	10	10	42	13	0	65	313	46	201	20	580	1,831	1,578	3,409	686.0		233	0	$497	49
APR	1	0	1	4	14	16	30	3	1		266	335	11	120	32	7	159	4	10	32	15	0	57	588	45	155	9	797	2,063	1,581	3,644	717.0		188	2	$421	26
MAY	0	1	0	7	7	23	47	4	0		238	327	12	23	145	3	171	4	11	37	18	0	66	444	43	126	22	635	2,000	1,800	3,800	466.0		193	0	$194	15
JUNE	0	0	0	7	16	10	52	1	0		252	338	14	25	115	10	150	7	6	27	6	0	39	238	43	57	10	348	1,715	1,628	3,343	892.5		205	0	$236	9
JULY	0	1	1	15	3	28	67	3	0		267	385	12	31	120	5	156	3	9	37	15	0	61	334	50	95	13	492	1,886	1,639	3,525	325.5		228	0	$274	19
AUG	0	0	0	18	4	18	52	4	1		287	384	11	28	142	6	176	8	11	33	14	0	58	135	66	23	17	241	1,832	1,709	3,541	353.0		209	0	$148	9
SEPT	0	6	0	9	6	34	27	5	1		251	339	5	22	140	5	167	14	11	34	13	1	59	134	51	33	14	232	1,714	1,494	3,208	643.5		197	3	$382	24
OCT	0	0	0	9	20	33	51	2	0		269	384	6	53	208	4	265	6	13	37	13	1	64	228	76	112	14	430	1,865	1,587	3,452	672.5		207	2	$342	22
NOV	0	1	1	5	13	16	39	2	0		215	292	16	50	168	8	226	12	16	53	16	0	85	530	38	115	20	703	1,576	1,624	3,200	591.5		162	0	$351	37
DEC	0	2	0	12	9	27	44	1	0		288	383	6	49	158	6	213	8	13	39	9	0	61	282	57	38	16	393	1,569	1,491	3,060	707.5		107	0	$164	25
Totals	1	14	4	111	93	254	506	31	3		3,136	4,152	124	492	1,579	68	2,139	87	129	445	164	2	740	4,172	565	1,200	170	5,445	21,808	19,184	40,992	7,013.5		2,332	10	$3,614	271

MONTHLY DEPARTMENT REPORT TOTALS

2013	>>	>>>	>>	>>>	MISC OFFENSES			<<<	<<<	<<<		>>>	ARRESTS		<<<	
	ARSON	ASSAULT	BURG	HOMICIDE	RAPE	LARCENY	MV THEFT	ROBBERY	MISC OFF	TOTAL OFF	DOM VIOL	FELONY	MISD	JUV	TOTAL	EOD
Jan-13	1	19	20	0	1	64	4	1	180	290	9	50	128	6	184	10
Feb-13	0	18	11	0	0	50	1	0	221	301	9	49	137	3	189	13
Mar-13	1	32	25	0	0	73	2	1	188	322	11	54	111	6	171	13
Apr-13	1	29	32	0	0	63	4	2	208	339	12	35	115	4	154	18
May-13	0	19	28	0	0	72	3	0	208	330	10	20	157	7	177	17
Jun-13	0	23	27	0	0	71	0	0	192	313	15	32	129	14	175	20
Jul-13																
Aug-13																
Sep-13																
Oct-13																
Nov-13																
Dec-13																
YRLY TOTALS	3	140	143	0	1	393	14	4	1197	1895	66	240	777	40	1050	91

2012	>>	>>>	>>	>>>	MISC OFFENSES			<<<	<<<	<<<		>>>	ARRESTS		<<<	
	ARSON	ASSAULT	BURG	HOMICIDE	RAPE	LARCENY	MV THEFT	ROBBERY	MISC OFF	TOTAL OFF	DOM VIOL	FELONY	MISD	JUV	TOTAL	EOD
Jan-12	0	16	11	0	1	55	3	0	175	261	8	31	135	8	174	11
Feb-12	0	7	10	0	0	43	2	0	203	265	3	29	115	2	146	10
Mar-12	0	13	5	0	0	41	0	0	194	253	6	36	143	5	184	10
Apr-12	0	24	7	0	0	37	4	2	210	284	16	34	169	6	209	10
May-12	1	21	17	0	1	37	3	1	215	296	9	32	132	7	171	9
Jun-12	0	33	15	0	0	53	3	0	158	262	12	35	109	7	151	8
Jul-12	0	26	20	0	0	75	5	2	239	367	11	44	151	25	220	13
Aug-12	0	23	22	0	4	67	0	1	214	331	9	41	142	6	189	17
Sep-12	1	25	17	0	2	54	3	0	209	311	9	50	164	8	222	10
Oct-12	0	14	27	0	1	51	7	1	215	316	9	35	172	8	215	22
Nov-12	0	19	21	0	1	66	3	1	184	295	9	44	160	12	216	8
Dec-12	0	13	22	0	1	56	3	1	156	252	9	31	94	5	130	6
YRLY TOTALS	2	234	194	0	11	635	36	9	2372	3493	110	442	1686	99	2227	134

MONTHLY DEPARTMENT REPORT TOTALS

2011	>>	>>>	>>	>>>	MISC OFFENSES			<<<	<<<	<<<		>>>	ARRESTS		<<<	
	ARSON	ASSAULT	BURG	HOMICIDE	RAPE	LARCENY	MV THEFT	ROBBERY	MISC OFF	TOTAL OFF	DOM VIOL	FELONY	MISD	JUV	TOTAL	EOD
Jan-11	1	18	14	0	3	46	3	1	149	235	8	43	168	4	215	11
Feb-11	1	7	9	0	1	39	6	1	180	244	6	36	118	1	155	7
Mar-11	0	25	18	0	0	39	5	0	260	347	17	41	157	6	204	6
Apr-11	0	23	17	0	2	25	2	1	259	329	10	29	164	9	202	7
May-11	1	9	21	0	0	31	3	1	279	345	9	42	205	3	250	9
Jun-11	0	28	13	0	0	33	3	1	253	331	19	39	158	6	203	9
Jul-11	0	23	15	0	2	41	5	2	173	261	17	30	113	2	145	12
Aug-11	0	36	16	0	2	45	5	1	129	234	21	49	118	2	169	7
Sep-11	0	10	19	0	3	46	8	1	264	351	14	46	139	1	186	17
Oct-11	0	14	26	0	6	57	4	1	229	337	10	42	159	6	207	4
Nov-11	0	11	33	0	2	53	1	2	195	297	9	30	123	8	161	15
Dec-11	0	24	23	0	1	52	2	0	189	291	15	29	126	9	164	11
YRLY TOTALS	3	228	224	0	22	507	47	12	2559	3602	155	456	1748	57	2261	115

2010	>>	>>>	>>	>>>	MISC OFFENSES			<<<	<<<	<<<		>>>	ARRESTS		<<<	
	ARSON	ASSAULT	BURG	HOMICIDE	RAPE	LARCENY	MV THEFT	ROBBERY	MISC OFF	TOTAL OFF	DOM VIOL	FELONY	MISD	JUV	TOTAL	EOD
Jan-10	0	5	24	0	2	44	4	1	191	271	10	30	107	9	146	4
Feb-10	0	17	8	0	2	28	2	0	245	301	14	25	97	4	122	7
Mar-10	0	9	26	0	0	25	2	0	351	413	10	36	148	1	185	10
Apr-10	1	10	27	1	0	26	5	1	264	335	12	120	32	7	159	4
May-10	0	3	27	0	1	45	4	0	247	327	12	23	145	3	171	4
Jun-10	0	13	29	0	0	35	1	0	260	338	14	25	115	10	150	7
Jul-10	0	14	51	0	2	35	1	2	280	385	12	31	120	5	156	3
Aug-10	1	22	18	0	0	52	4	0	287	384	11	28	142	6	176	8
Sep-10	1	15	34	0	6	27	5	0	251	339	5	22	140	5	167	14
Oct-10	0	29	33	0	0	51	2	0	296	384	6	53	208	4	265	6
Nov-10	0	5	17	0	0	30	2	1	237	292	16	50	168	8	226	12
Dec-10	0	15	34	0	2	34	1	0	297	383	6	49	158	6	213	8
YRLY TOTALS	3	157	328	1	15	432	33	5	3206	4152	128	492	1580	68	2136	87

x x x

MONTHLY DEPARTMENT REPORT TOTALS

2013	>>>	>> COLLISIONS <<			>>>	>>>	>>> CITATIONS <<<			<<<	> CALLS FOR SERVICE <				>>> ANIMAL CONTROL <<<			
	MVC INJURY	MVC PROP D	MVC PP	MVC FATALITY	MVC TOTAL	TRAFFIC	NON-TRAFFIC	WARN	DUI	TOTAL	DURANT	BRYAN CO	TOTAL	RESERVE HOURS	CFS	CITS	FEES COLLECTED	ADOPTS
Jan-13	11	34	11	1	57	277	40	144	6	467	1,705	1,390	3,095	564.50	114	1	$67	20
Feb-13	9	36	26	0	71	255	43	36	7	341	1,566	1,220	2,786	502.00	121	1	$213	27
Mar-13	10	32	11	0	53	271	32	52	7	362	1,705	1,584	3,289	424.00	164	1	$203	29
Apr-13	10	40	13	0	63	203	27	21	4	255	1,658	1,428	3,086	506.50	185	1	$164	43
May-13	17	37	13	0	67	236	41	49	11	337	1,986	1,400	3,386	377.00	164	3	$105	27
Jun-13	10	24	7	0	41	145	41	39	7	232	1,726	1,471	3,197	356.50	137	0	$189	33
Jul-13																		
Aug-13																		
Sep-13																		
Oct-13																		
Nov-13																		
Dec-13																		
YRLY TOTALS	67	203	81	1	352	1387	224	341	42	1994	10,346	8,493	18,839	2730.50	885	7	$941	179

2012	<<<	<< COLLISIONS >>			>>>	<<<	<<< CITATIONS >>>			>>>	< CALLS FOR SERVICE >				<<< ANIMAL CONTROL >>>			
	MVC INJURY	MVC PROP D	MVC PP	MVC FATALITY	MVC TOTAL	TRAFFIC	NON-TRAFFIC	WARN	DUI	TOTAL	DURANT	BRYAN CO	TOTAL	RESERVE HOURS	CFS	CITS	FEES COLLECTED	ADOPTS
Jan-12	11	24	14	0	49	225	37	213	12	487	1,957	1,672	3,629	541.00	163	0	$342	28
Feb-12	8	27	12	0	47	230	31	178	12	451	1,752	1,348	3,100	580.00	181	2	$349	56
Mar-12	11	31	11	0	53	230	35	139	16	420	2,044	1,368	3,412	570.50	181	0	$224	51
Apr-12	8	36	5	0	49	220	47	46	21	334	1,907	1,564	3,471	697.50	138	1	$463	19
May-12	9	33	9	0	51	145	27	34	13	219	1,852	1,643	3,495	845.00	127	0	$185	20
Jun-12	12	34	11	0	57	200	27	93	9	329	1,925	1,555	3,480	914.50	164	1	$178	23
Jul-12	9	28	12	0	49	189	52	298	18	557	2,176	1,740	3,916	591.00	147	0	$158	28
Aug-12	12	38	15	0	65	128	45	54	5	232	1,804	1,468	3,272	547.50	167	0	$352	44
Sep-12	14	39	17	0	70	297	73	12	8	390	1,968	1,406	3,374	514.50	177	1	$130	44
Oct-12	14	39	12	0	65	282	70	15	7	374	1,708	1,478	3,186	722.00	173	1	$316	30
Nov-12	16	25	20	0	61	206	58	55	8	327	1,646	1,438	3,084	479.00	124	2	$237	33
Dec-12	21	42	17	0	80	132	31	37	5	205	1,646	1,395	3,041	507.00	86	2	$20	15
YRLY TOTALS	145	396	155	0	696	2484	533	1174	134	4325	22,385	18,075	40,460	7509.50	1828	10	$2,954	391

MONTHLY DEPARTMENT REPORT TOTALS

2011	<<<	<< COLLISIONS >>			>>>	<<<	<<< CITATIONS >>>			>>>	< CALLS FOR SERVICE >				<<< ANIMAL CONTROL >>>			
	MVC INJURY	MVC PROP D	MVC PP	MVC FATALITY	MVC TOTAL	TRAFFIC	NON-TRAFFIC	WARN	DUI	TOTAL	DURANT	BRYAN CO	TOTAL	RESERVE HOURS	CFS	CITS	FEES COLLECTED	ADOPTS
Jan-11	8	15	41	0	64	428	40	109	22	599	1,625	1,680	3,305	646.50	187	0	$404	50
Feb-11	9	50	16	0	75	215	39	54	9	317	1,441	1,439	2,880	681.50	185	0	$310	51
Mar-11	13	38	14	0	65	199	40	95	19	353	1,722	1,676	3,398	758.50	228	1	$451	52
Apr-11	13	49	20	0	82	224	42	69	17	352	1,633	1,568	3,201	1043.00	166	3	$281	45
May-11	14	45	9	0	68	451	35	82	15	583	1,950	1,709	3,659	527.50	219	1	$272	58
Jun-11	11	28	15	0	54	328	45	59	20	452	1,912	1,694	3,606	732.00	152	1	$124	32
Jul-11	10	30	19	0	59	370	24	83	6	483	1,832	1,849	3,681	379.50	191	1	$324	50
Aug-11	10	23	19	0	52	171	25	36	7	239	1,854	1,832	3,686	306.00	206	0	$340	49
Sep-11	12	31	20	0	63	123	49	42	15	229	2,050	1,812	3,862	458.00	279	1	$466	39
Oct-11	10	35	16	0	61	148	45	112	16	321	2,068	1,749	3,817	523.50	194	1	$359	40
Nov-11	8	24	15	0	47	81	34	129	12	256	1,545	1,586	3,131	397.00	164	1	$362	59
Dec-11	11	43	17	0	71	135	42	85	8	270	1,512	1,713	3,225	597.00	162	0	$481	58
YRLY TOTALS	129	411	221	0	761	2873	460	955	166	4454	21,144	20,307	41,451	7050.00	**2333**	**10**	**$4,174**	**583**

2010	<<<	<< COLLISIONS >>			>>>	<<<	<<< CITATIONS >>>			>>>	< CALLS FOR SERVICE >				<<< ANIMAL CONTROL >>>			
	MVC INJURY	MVC PROP D	MVC PP	MVC FATALITY	MVC TOTAL	TRAFFIC	NON-TRAFFIC	WARN	DUI	TOTAL	DURANT	BRYAN CO	TOTAL	RESERVE HOURS	CFS	CITS	FEES COLLECTED	ADOPTS
Jan-10	8	36	15	0	59	662					1,961	1,533	3,494	385.50	215	0	$326	14
Feb-10	11	38	17	0	66	284	50	245	15	594	1,796	1,520	3,316	573.00	188	3	$279	22
Mar-10	10	42	13	0	65	313	46	201	20	580	1,831	1,578	3,409	686.00	233	0	$497	49
Apr-10	10	32	15	0	57	588	45	155	9	797	2,063	1,581	3,644	717.00	188	2	$421	26
May-10	11	37	18	0	66	444	43	126	22	635	2,000	1,800	3,800	466.00	193	0	$194	15
Jun-10	6	27	6	0	39	238	43	57	10	348	1,715	1,628	3,343	892.50	205	0	$236	9
Jul-10	9	37	15	0	61	334	50	95	13	492	1,886	1,639	3,525	325.50	228	0	$274	19
Aug-10	11	33	14	0	58	135	66	23	17	241	1,832	1,709	3,541	353.00	209	0	$148	9
Sep-10	11	34	13	1	59	134	51	33	14	232	1,714	1,494	3,208	643.50	197	3	$382	24
Oct-10	13	37	13	1	64	228	76	112	14	430	1,865	1,587	3,452	672.50	207	2	$342	22
Nov-10	16	53	16	0	85	530	38	115	20	703	1,676	1,624	3,200	591.50	162	0	$351	37
Dec-10	13	39	9	0	61	282	57	38	16	393	1,569	1,491	3,060	707.50	107	0	$164	25
YRLY TOTALS	129	445	164	2	740	4172	565	1200	170	5445	21,908	19,184	40,992	7013.50	**2332**	**10**	**$3,614**	**271**
	x		x								x			x				

Agenda Item: 5.e.

The City of Durant

Parks

Memorandum

Date: 9/1/2016
To: Mayor and City Council
From: Keach Ballard, Parks Department Superintendent
Re: Parks Department Monthly Report - August 2016

Council Information / Action Requested

City Staff Information / Action Follow-up, if Council authorizes this action:

ATTACHMENTS:

Description	Type	Upload Date
Monthly Report - August 2016	Cover Memo	9/1/2016

THE CITY OF DURANT
Office of the Park/ DMSC Department

Park / DMSC Project Schedule
August 1---Aug. 31, 2016

A. Work Completed:

1) Mowed all Parks.
2) Cemetery Burials.
3) Citizen's Request

4) Trusses and deck on Dixon Durant Restroom
5) Restroom at Slaton
6) Installed Lights on poles @ Slaton
7) Removed old fencing @ Slaton
8) Electrical @ DMSC Trail Grant Restroom and Office
9) Repaired irrigation heads @ Sports Complex
10) City Hall Office moving
11)Prep fields for upcoming soccer, football, and softball

B. Work Planned for Sept. 2016:

1). Install more fall barrier in all Parks.
2). Purchase fall barrier boarder for Carl Albert Park.
3). Citizen's Request
4) Install Electrical @ Slaton Park
5) Prepare fields for sporting events

.

C. Work Planned for Jan. 2016 thru June. 2016' **Approx. start date- finish date:**

1. DMSC Project #916 Trail grant office 1/2016 ------8/16
2. Slaton Park Lighting Project #920 2/16 ---------8/16
3. Order and install more fall barrier borders and fall barrier to all parks

D. Projects Planned and requested for Authorization:

1. Grant at Carl Albert Park (Playground and Adult Fitness)

1201 N.E. 2nd • Durant, Oklahoma 74701 • (580) 924-8358 • Fax (580) 924-8344
www.durant.org

Agenda Item: 5.f.

The City of Durant

Office of Community Development

Memorandum

Date: 9/1/2016
To: Mayor and City Council
From: Marty Cook, Director
Re: Community Development Monthly Report - August 2016

Report of Monthly Activities for the Community Development Department for the Month of August 2016.

Council Information / Action Requested

City Staff Information / Action Follow-up, if Council authorizes this action:

ATTACHMENTS:

Description	Type	Upload Date
MR Aug 2016	Cover Memo	9/1/2016

The City of Durant

Office of Community Development

DURANT
· OKLAHOMA ·

Monthly Activity Report, August 2016
Community Development Department

1. Inspections	122
Building	32
Electrical	36
Mechancial	14
Plumbing	25
Other	15
2. Code Enforcements	**59**
Other Contacts Made	0
Grass & Weeds	28
Junk Vehicles	3
Junk Appliances	2
Dilapidated Structures	5
Trash & Debris	11
Trees & Shrubs	10
Other	0
Noticed Posted	59
Condemned	1
3. New Construction	**21**
SFR	21
MFR	0
Commercial	0
Industrial	0

4. Permits Issued	169
Building	57
Electrical	31
Plumbing	32
Mechanical	28
Floodplain	21
5. Public Hearings	**2**
Board of Adjustment	0
Planning Commission	1
City Council	1
6. Letters Mailed	**70**
Code Enforcement	59
Public Hearings	11
Other	0
7. GIS / Mapping	**88**
Maps printed	60
911 Addresses Requested	28
8. Licenses Issued	**9**
Electrical	3
Plumbing	3
Mechanical	3

Inspection Total by Month

		Aug-15	Sep-15	Oct-15	Nov-15	Dec-15	Jan-16	Feb-16	Mar-16	Apr-16	May-16	Jun-16	Jul-16	Aug-16	TOTALS
BUILDING	B	38	38	41	34	35	25	28	40	30	34	42	47	32	464
ELECTRICAL	E	33	38	36	22	36	24	32	29	39	29	34	45	36	433
MECHANICAL	M	12	12	18	12	11	5	7	5	14	15	12	21	14	158
PLUMBING	P	24	25	31	18	27	19	14	11	22	32	30	39	25	317
OTHER	O	3	8	5	7	7	10	8	14	9	9	14	14	15	123
CODE ENFOR	C	102	102	102	41	99	170	90	123	114	134	123	315	177	1692
TOTAL		212	223	233	134	215	253	179	222	228	253	255	481	299	3187

Permits Total by Month

New Dev.		Aug-15	Sep-15	Oct-15	Nov-15	Dec-15	Jan-16	Feb-16	Mar-16	Apr-16	May-16	Jun-16	Jul-16	Aug-16	TOTALS
SFR	S	3	3	0	1	3	2	4	4	16	0	4	0	21	61
MFR	M	0	1	0	2	0	0	1	0	0	3	1	0	0	8
Commercial	C	0	4	2	1	0	0	1	0	1	0	1	0	0	10
Industrial	I	1	0	1	0	0	0	1	0	0	0	0	0	0	3
$ in Fees		$ 10,605.00	$ 34,752.00	$ 34,272.00	$ 83,792.00	$ 3,762.00	$ 2,508.00	$ 11,389.00	$ 7,016.00	$ 22,282.00	$ 3,762.00	$ 8,024.00	$ -	$ 34,944.00	$ 257,108.00
$ in Valuation		$ 3,640,000.00	$ 66,811,153.00	$ 255,375,179.00	$ 145,407,248.00	$ 315,000.00	$ 210,000.00	$ 5,695,000.00	$ 1,023,400.00	$ 8,220,599.00	$ 370,000.00	$ 7,730,000.00	$ -	$ 1,676,500.00	$ 496,474,079.00
															5%

BUILDING PERMITS FOR AUGUST 2016

DATE	PERMIT #	NAME	ADDRESS	FEE	EST COST	TYPE	SQ,FT
08/01/2016	026744	BRIAN ALLEN	5033 KIMBER LANE	79.00	8,000.00	STORAGE BLDG	
08/01/2016	026745	KELSO DEMOLITION	604 NE 2ND	100.00	3,000.00	DEMO	
08/01/2016	026746	JAMISON ELEC	44 W LIVEOAK	100.00	2,500.00	DEMO	
08/01/2016	026747	D&R BUILDERS	2524 CARRIAGE POINT	1,254.00	120,000.00	SFR	1,800
08/02/2016	026752	MAYFIELD ROOFING	1704 SKYLINE	79.00	1,800.00	RES-ROOF	
08/04/2016	026758	SIGN DEPOT	116 W MAIN	204.00	1,600.00	COMM-SIGN	
08/04/2016	026760	MAYFIELD ROOFING	401 W PLUM	79.00	1,400.00	RES-ROOF	
08/04/2016	026762	THE ORIGINAL TEXOMA ROOFING	805 MEADOWLARK	79.00	1,144.00	RES-ROOF	
08/05/2016	026763	PLYER CONSTRUCTION	1800 W ARKANSAS	4,919.00	2,766,000.00	C-ADD ON	87,267
08/08/2016	026764	MAYFIELD ROOFING	1016 CHUCKWA	79.00	8,000.00	RES-ROOF	
08/09/2016	026768	GALAXIE SIGN CO	2501 W MAIN 100	204.00	5,250.00	COMM-SIGN	
08/09/2016	026771	KEVIN KEENER	1118 N 2ND	100.00	3,000.00	DEMO	
08/09/2016	026772	KEVIN KEENER	123 W WALNUT	100.00	3,000.00	DEMO	
08/11/2016	026775	DUSTIN TUCKER	220 W MAIN	154.00	125,000.00	COMM-ROOF	
08/11/2016	026776	THE ORIGINAL TEXOMA ROOFING	3505 HARMONY DR	79.00	4,500.00	RES-ROOF	
08/12/2016	026778	JIMMY SPEED	123 MARKET SQUARE	204.00	1,000.00	COMM-SIGN	
08/15/2016	026780	GARY SMITH	3712 W MAIN	104.00	1.00	CA	
08/16/2016	026782	SOVEREIGN	914 BERETTA	1,254.00	180,000.00	SFR	1,900
08/16/2016	026788	SOVEREIGN	908 BERETTA	1,254.00	180,000.00	SFR	1,830
08/16/2016	026793	RYAN TEMPLE	704 SUNNY MEADOWS	79.00	9,000.00	RES-ROOF	
08/17/2016	026795	R & R SIGNS	217 W MAIN	79.00	7,000.00	SIGN MODIF	
08/18/2016	026798	SUNVIEW DEVELOPMENT	742 CLAIRES COURT	1,254.00	61,500.00	SFR	1,074
08/18/2016	026804	SUNVIEW DEVELOPMENT	744 CLAIRES COURT	1,254.00	61,500.00	SFR	1,035
08/18/2016	026809	SUNVIEW DEVELOPMENT	746 CLAIRES COURT	1,254.00	61,500.00	SFR	964
08/18/2016	026814	SUNVIEW DEVELOPMENT	748 CLAIRES COURT	1,254.00	61,500.00	SFR	1,074
08/18/2016	026819	SUNVIEW DEVELOPMENT	750 CLAIRES COURT	1,254.00	61,500.00	SFR	1,035
08/18/2016	026824	SUNVIEW DEVELOPMENT	752 CLAIRES COURT	1,254.00	61,500.00	SFR	1,074
08/18/2016	026829	SUNVIEW DEVELOPMENT	838 CLAIRES COURT	1,254.00	61,500.00	SFR	1,074
08/18/2016	026834	SUNVIEW DEVELOPMENT	840 CLAIRES COURT	1,254.00	61,500.00	SFR	1,085
08/18/2016	026839	SUNVIEW DEVELOPMENT	842 CLAIRES COURT	1,254.00	61,500.00	SFR	964
08/18/2016	026844	SUNVIEW DEVELOPMENT	844 CLAIRES COURT	1,254.00	61,500.00	SFR	964
08/19/2016	026850	SUNVIEW DEVELOPMENT	846 CLAIRES COURT	1,254.00	61,500.00	SFR	1,085
08/19/2016	026855	SUNVIEW DEVELOPMENT	848 CLAIRES COURT	1,254.00	61,500.00	SFR	964
08/19/2016	026860	SUNVIEW DEVELOPMENT	852 CLAIRES COURT	1,254.00	61,500.00	SFR	1,074
08/19/2016	026865	SUNVIEW DEVELOPMENT	854 CLAIRES COURT	1,254.00	61,500.00	SFR	1,035
08/19/2016	026869	SUNVIEW DEVELOPMENT	856 CLARIES COURT	1,254.00	61,500.00	SFR	964
08/19/2016	026874	ALL SEASONS CONTRACTING	1702 W EVERGREEN	79.00	11,000.00	RES-ROOF	
08/19/2016	026875	MAYFIELD ROOFING	131 E MULBERRY	79.00	4,000.00	RES-ROOF	
08/19/2016	026876	TAMI ARNOLD	131 E MULBERRY	79.00	3,000.00	STORAGE BLDG	
08/23/2016	026879	ALL STAR INVESTMENTS	515 W ELM	1,254.00	62,000.00	SFR	1,144
08/23/2016	026883	ALL STAR INVESTMENTS	1219 N 5TH	1,254.00	62,000.00	SFR	1,144
08/23/2016	026890	MAYFIELD ROOFING	1018 CHUCKWA	79.00	5,000.00	RES-ROOF	
08/23/2016	026891	MAYFIELD ROOFING	201 SANDPIPER	79.00	5,000.00	RES-ROOF	

BUILDING PERMITS FOR JULY 2016

DATE	PERMIT #	NAME	ADDRESS	FEE	EST COST	TYPE	SQ,FT
07/06/2016	026692	NTS SIGNS	2501 W MAIN 108	204.00	1,800.00	COMM-SIGN	
07/06/2016	026693	JAMES CREASON	715 S 4TH	79.00	2,500.00	STORM SHELTER	
07/06/2016	026696	ALL SEASONS CONTRACTING	124 W EVERGREEN	154.00	70,000.00	COMM-ROOF	
07/07/2016	026697	CRAIG HIBBS	922/924 GRANT	79.00	7,300.00	RES-ROOF	
07/07/2016	026698	CRAIG HIBBS	1203/1205 N 9TH	79.00	7,300.00	RES-ROOF	
07/08/2016	026699	GARY BUCHANAN	1121 N 3RD	79.00	11,200.00	RES-ROOF	
07/08/2016	026700	TRIBESMAN CONST.	2107 QUAIL CREEK	79.00	4,200.00	RES-ROOF	
07/08/2016	026703	LAVON SPEERS	2001 MASON ST	79.00	2,450.00	STORM SHELTER	
07/08/2016	026705	AUTUMN GABRIEL	1316 DALLAS	104.00	5,000.00	SFRA	
07/08/2016	026709	MAYFIELD ROOFING	3018 W UNIVERSITY	79.00	900.00	RES-ROOF	
07/11/2016	026710	TRIBESMAN CONST.	1606 N 10TH	79.00	4,000.00	RES-ROOF	
07/11/2016	026711	MAYFIELD ROOFING	615 N 7TH	79.00	1,200.00	RES-ROOF	
07/11/2016	026712	MICHAEL LAMBERT	428 N 4TH	104.00	3,000.00	SFRA	
07/12/2016	026715	MARY HERRON	409 N 11TH	79.00	4,545.00	STORM SHELTER	
07/12/2016	026717	ABEL ALEMAN ROOFING	617 W WILLOW	79.00	5,000.00	RES-ROOF	
07/13/2016	026720	OLIVIA BOOTH	701 N 5TH	100.00	7,200.00	DEMO	
07/14/2016	026722	ABEL ALEMAN ROOFING	623 N 13TH	79.00	5,000.00	RES-ROOF	
07/15/2016	026723	MAYFIELD ROOFING	1015 S GEORGIA	79.00	600.00	RES-ROOF	
07/15/2016	026724	MAYFIELD ROOFING	1011 S GEORGIA	79.00	600.00	RES-ROOF	
07/15/2016	026725	MAYFIELD ROOFING	1104 ADA ST	79.00	7,000.00	RES-ROOF	
07/22/2016	026736	ABIDE HOMES	1005 BROOKSIDE	79.00	8,000.00	RES-ROOF	
07/25/2016	026737	MAYFIELD ROOFING	902 ROOSEVELT	79.00	1,600.00	RES-ROOF	
07/27/2016	026739	KALIKA INC	128 W MAIN	79.00	400.00	C-SIGN	
07/28/2016	026740	GARY HAMMEL	1014 WACO ST	79.00	5,500.00	RES-ROOF	
07/28/2016	026741	DOZER WORX	501 N 14TH	100.00	3,500.00	DEMO	
07/29/2016	026742	MAYFIELD ROOFING	1005 W GEORGIA	79.00	600.00	RES-ROOF	
07/29/2016	026743	MAU	1001 W GEORGIA	79.00	600.00	RES-ROOF	
				2,425.00	170,995.00		
		BUILDING	27.00				
		PLUMBING	3.00				
		ELECTRICAL	9.00				
		MECHANICAL	7.00				
		TOTAL	46.00				

AUGUST 2016 MECHANICAL PERMITS

DATE	PERMIT #	NAME	ADDRESS	TYPE
08/01/2016	026749	ADVANCED COOLING	3524 CARRIAGE PT	NEW
08/02/2016	026753	ALLIED SERVICES	1001 W MAIN	CHANGE OUT
08/02/2016	026755	ALLAN MAGOUIRK	227 RADIO RD	CHANGE OUT
08/08/2016	026767	FRONTIER REFRI.	3712 W MAIN	REMODEL
08/16/2016	026785	STATE LINE	914 BERETTA	NEW
08/16/2016	026790	STATE LINE	908 BERETTA	NEW
08/18/2016	026801	TOP TECH	742 CLAIRES COURT	NEW
08/18/2016	026806	TOP TECH	744 CLAIRES COURT	NEW
08/18/2016	026811	TOP TECH	746 CLAIRES COURT	NEW
08/18/2016	026816	TOP TECH	748 CLAIRES COURT	NEW
08/18/2016	026821	TOP TECH	750 CLAIRES COURT	NEW
08/18/2016	026826	TOP TECH	752 CLAIRES COURT	NEW
08/18/2016	026931	TOP TECH	838 CLAIRES COURT	NEW
08/18/2016	026836	TOP TECH	840 CLAIRES COURT	NEW
08/18/2016	026841	TOP TECH	842 CLAIRES COURT	NEW
08/18/2016	026847	TOP TECH	844 CLAIRES COURT	NEW
08/18/2016	026852	TOP TECH	846 CLAIRES COURT	NEW
08/19/2016	026857	TOP TECH	848 CLAIRES COURT	NEW
08/19/2016	026862	TOP TECH	852 CLAIRES COURT	NEW
08/19/2016	026867	TOP TECH	854 CLAIRES COURT	NEW
08/19/2016	026871	TOP TECH	856 CLAIRES COURT	NEW
08/19/2016	026877	KEVIN MCKENNA	2501 W MAIN	NEW
08/23/2016	026880	PERCELL MECHANICAL	515 W ELM	NEW
08/23/2016	026884	PERCELL MECHANICAL	1219 N 5TH	NEW
08/23/2016	026900	PLYER CONST.	584 OLD HWY 70	NEW
08/23/2016	026901	PLYER CONST.	584 OLD HWY 70	NEW
08/23/2016	026902	PLYER CONST.	584 OLD HWY 70	NEW
08/31/2016	026925	JERRYS HEAT AND AIR	2825 ROBBINHOOD PL	NEW

AUGUST 2016 PLUMBING PERMITS

DATE	PERMIT #	NAME	ADDRESS	TYPE
08/01/2016	026751	BLACKBURN	3524 CARRIAGE PT	NEW
08/02/2016	026757	MISTIE STILWELL	521 N 8TH	GAS
08/04/2016	026759	ACE PLUMBING	1901 W MISSISSIPPI	GAS
08/08/2016	026765	TUCKER PLUMBING	724 N 5TH	GAS
08/09/2016	026769	TUCKER PLUMBING	1308B N 1ST	REMODEL
08/11/2016	206773	TUCKER PLUMBING	912 1/2 N 7TH	GAS
08/16/2016	026787	BLACKBURN	914 BERETTA	NEW
08/16/2016	026792	BLACKBURN	908 BERETTA	NEW
08/18/2016	026803	KD PLUMBING	742 CLAIRES COURT	NEW
08/18/2016	026808	KD PLUMBING	744 CLAIRES COURT	NEW
08/18/2016	026813	KD PLUMBING	746 CLAIRES COURT	NEW
08/18/2016	026818	KD PLUMBING	748 CLAIRES COURT	NEW
08/18/2016	026823	KD PLUMBING	750 CLAIRES COURT	NEW
08/18/2016	026828	KD PLUMBING	752 CLAIRES COURT	NEW
08/18/2016	026833	KD PLUMBING	838 CLAIRES COURT	NEW
08/18/2016	026838	KD PLUMBING	840 CLAIRES COURT	NEW
08/18/2016	026843	KD PLUMBING	842 CLAIRES COURT	NEW
08/18/2016	026849	KD PLUMBING	844 CLAIRES COURT	NEW
08/18/2016	026854	KD PLUMBING	846 CLAIRES COURT	NEW
08/19/2016	026859	KD PLUMBING	848 CLAIRES COURT	NEW
08/19/2016	026864	KD PLUMBING	852 CLAIRES COURT	NEW
08/19/2016	026873	KD PLUMBING	856 CLAIRES COURT	NEW
08/19/2016	026878	LISA CHEATLE	1108 N 5TH	GAS
08/23/2016	026882	CLARKS	515 W ELM	NEW
08/23/2016	026886	CLARKS	1219 N 5TH	NEW
08/23/2016	026889	KD PLUMBING	854 CLAIRES COURT	NEW
08/23/2016	026894	PLYLER CONST	584 OLD HWY 70	NEW
08/23/2016	026895	PLYLER CONST	584 OLD HWY 70	NEW
08/23/2016	026896	PLYLER CONST	584 OLD HWY 70	NEW
08/24/2016	026904	TUCKER PLUMBING	410 S 16TH	SEWER
08/25/2016	026908	BLACKBURN	1108 N 5TH	GAS
08/31/2016	026924	CLARKS	2825 ROBBINHOOD PL	NEW

AUGUST 2016 ELECTRICAL PERMITS

DATE	PERMIT #	NAME	ADDRESS	TYPE
08/01/2016	026750	DINSMORE ELEC	3524 CARRIAGE PT	NEW
08/02/2016	026756	CACHE VALLEY ELEC	584 OLD HWY 70	NEW
08/09/2016	026770	FREDICK ELEC	402 S 21ST	CHANGE OUT
08/16/2016	026786	AMERICAN ELEC	914 BERETTA	NEW
08/16/2016	026791	AMERICAN ELEC	908 BERETTA	NEW
08/17/2016	026794	GARY HALL	1400 W MAIN	REMODEL
08/17/2016	026796	CORNERSTONE	2501 W MAIN	NEW
08/18/2016	026802	AMERICAN ELEC	742 CLAIRES COURT	NEW
08/18/2016	026807	AMERICAN ELEC	744 CLAIRES COURT	NEW
08/18/2016	026812	AMERICAN ELEC	746 CLAIRES COURT	NEW
08/18/2016	026817	AMERICAN ELEC	748 CLAIRES COURT	NEW
08/18/2016	026822	AMERICAN ELEC	750 CLAIRES COURT	NEW
08/18/2016	026827	AMERICAN ELEC	752 CLAIRES COURT	NEW
08/18/2016	026832	AMERICAN ELEC	838 CLAIRES COURT	NEW
08/18/2016	026837	AMERICAN ELEC	840 CLAIRES COURT	NEW
08/18/2016	026842	AMERICAN ELEC	842 CLAIRES COURT	NEW
08/18/2016	026848	AMERICAN ELEC	844 CLAIRES COURT	NEW
08/18/2016	026853	AMERICAN ELEC	846 CLAIRES COURT	NEW
08/19/2016	026858	AMERICAN ELEC	848 CLAIRES COURT	NEW
08/19/2016	026863	AMERICAN ELEC	852 CLAIRES COURT	NEW
08/19/2016	026868	AMERICAN ELEC	854 CLAIRES COURT	NEW
08/19/2016	026872	AMERICAN ELEC	856 CLAIRES COURT	NEW
08/23/2016	026881	AMERICAN ELEC	515 W ELM	NEW
08/23/2016	026885	AMERICAN ELEC	1219 N 5TH	NEW
08/23/2016	026893	LYLES ELEC	1125 S 9TH	REMODEL
08/23/2016	026897	PLYLER CONST	584 OLD HWY 70	NEW
08/23/2016	026898	PLYLER CONST	584 OLD HWY 70	NEW
08/23/2016	026899	PLYLER CONST	584 OLD HWY 70	NEW
08/31/2016	026921	CENTRAL ELEC	523 N 3RD	REMODEL
08/31/2016	026922	AMERICAN ELEC	2825 ROBBINHOOD PL	NEW
08/31/2016	026923	CENTRAL ELEC	1205 W ALABAMA	REMODEL

August-16				
Monthly Code Report				
No.	Date	Address	Type of Nuisance	Decision
1	08/08/2016	707 BEECH	GRASS AND WEEDS	CITY
2	08/08/2016	707 BEECH	TRASH AND DEBRIS	OWNER
3	08/08/2016	717 BEECH	GRASS AND WEEDS	OWNER
4	08/08/2016	811 BEECH	GRASS AND WEEDS	10 DAYS
5	08/08/2016	811 BEECH	TREES AND SHRUBS	10 DAYS
6	08/08/2016	1020 GRANT	GRASS AND WEEDS	OWNER
7	08/08/2016	1020 GRANT	TRASH AND DEBRIS	OWNER
8	08/08/2016	1020 GRANT	TREES AND SHRUBS	OWNER
9	08/08/2016	603 NE 2ND	TRASH AND DEBRIS	10 DAYS
10	08/08/2016	1415 ARKANSAS	GRASS AND WEEDS	OWNER
11	08/08/2016	1415 ARKANSAS	TRASH AND DEBRIS	OWNER
12	08/08/2016	1415 ARKANSAS	DILAPIDATED	10 DAYS
13	08/08/2016	212 S 15TH	TRASH AND DEBRIS	10 DAYS
14	08/08/2016	1503 N 10TH	GRASS AND WEEDS	OWNER
15	08/08/2016	1503 N 10TH	TREES AND SHRUBS	OWNER
16	08/08/2016	1503 N 10TH	JUNK VEHICLE	OWNER
17	08/08/2016	1017 CHUCKWA	GRASS AND WEEDS	OWNER
18	08/08/2016	1017 CHUCKWA	TRASH AND DEBRIS	OWNER
19	08/08/2016	1017 CHUCKWA	DILAPIDATED	CITY
20	08/08/2016	1906 RED FOX RD	GRASS AND WEEDS	CITY
21	08/08/2016	1906 RED FOX RD	TREES AND SHRUBS	CITY
22	08/08/2016	LOTS 1-4 RED FOX RD	GRASS AND WEEDS	10 DAYS
23	08/08/2016	LOTS 1-4 RED FOX RD	TREES AND SHRUBS	10 DAYS
24	08/08/2016	LOTS 1-6 & 4-11 CEMETERY RD	GRASS AND WEEDS	OWNER
25	08/08/2016	LOTS 1-6 & 4-11 CEMETERY RD	TREES AND SHRUBS	OWNER
26	08/08/2016	LOTS 1-6 & 4-11 CEMETERY RD	DILAPIDATED	6 MONTH
27	08/08/2016	1607 CEMETERY RD	GRASS AND WEEDS	OWNER
28	08/08/2016	1607 CEMETERY RD	TREES AND SHRUBS	OWNER
29	08/08/2016	1607 CEMETERY RD	DILAPIDATED	OWNER
30	08/12/2016	1702 TIMBERLINE	GRASS AND WEEDS	POSTED
31	08/12/2016	1702 TIMBERLINE	TREES AND SHRUBS	POSTED
32	08/12/2016	115 E MULBERRY	GRASS AND WEEDS	POSTED
33	08/12/2016	115 E MULBERRY	TREES AND SHRUBS	POSTED
34	08/12/2016	612 NE 2ND	TRASH AND DEBRIS	POSTED
35	08/12/2016	310 W ALABAMA	TRASH AND DEBRIS	POSTED
36	08/12/2016	324 W ALABAMA	TRASH AND DEBRIS	POSTED
37	08/12/2016	616 W LOUISIANA	TRASH AND DEBRIS	POSTED
38	08/12/2016	616 W LOUISIANA	JUNK APPLIANCES	POSTED
39	08/12/2016	618 W LOUISIANA	TRASH AND DEBRIS	POSTED
40	08/12/2016	918 N 5TH	TRASH AND DEBRIS	POSTED
41	08/12/2016	1224 N 6TH	GRASS AND WEEDS	POSTED
42	08/12/2016	1224 N 6TH	TREES AND SHRUBS	POSTED
43	08/12/2016	709 N 6TH	GRASS AND WEEDS	POSTED
44	08/12/2016	709 N 6TH	TREES AND SHRUBS	POSTED
45	08/12/2016	523 W PLUM	GRASS AND WEEDS	POSTED
46	08/12/2016	523 W PLUM	TREES AND SHRUBS	POSTED
47	08/12/2016	1310 N 7TH	GRASS AND WEEDS	POSTED
48	08/12/2016	1311 N 7TH	GRASS AND WEEDS	POSTED
49	08/12/2016	1311 N 7TH	TREES AND SHRUBS	POSTED
50	08/12/2016	1312 N 7TH	GRASS AND WEEDS	POSTED
51	08/12/2016	1315 N 7TH	GRASS AND WEEDS	POSTED

52	08/12/2016	1321 N 7TH	GRASS AND WEEDS	POSTED
53	08/12/2016	1327 N 7TH	JUNK VEHICLE	POSTED
54	08/12/2016	1327 N 7TH	GRASS AND WEEDS	POSTED
55	08/12/2016	1406 HOUSTON	GRASS AND WEEDS	POSTED
56	08/12/2016	1412 HOUSTON	GRASS AND WEEDS	POSTED
57	08/12/2016	1416 HOUSTON	GRASS AND WEEDS	POSTED
58	08/12/2016	2100 W EVERGREEN	TRASH AND DEBRIS	POSTED
59	08/12/2016	4102 W HWY 70	GRASS AND WEEDS	POSTED
60	08/12/2016	4102 W HWY 70	TRASH AND DEBRIS	POSTED
61	08/12/2016	4102 W HWY 70	TREES AND SHRUBS	POSTED
62	08/12/2016	4102 W HWY 70	JUNK VEHICLE	POSTED
63	08/12/2016	4102 W HWY 70	JUNK APPLIANCES	POSTED
64	08/22/2016	1702 TIMBERLINE	GRASS AND WEEDS	10 DAYS
65	08/22/2016	1702 TIMBERLINE	TREES AND SHRUBS	10 DAYS
66	08/22/2016	115 E MULBERRY	GRASS AND WEEDS	CITY
67	08/22/2016	115 E MULBERRY	TREES AND SHRUBS	CITY
68	08/22/2016	612 NE 2ND	TRASH AND DEBRIS	10 DAYS
69	08/22/2016	310 W ALABAMA	TRASH AND DEBRIS	OWNER
70	08/22/2016	324 W ALABAMA	TRASH AND DEBRIS	OWNER
71	08/22/2016	616 W LOUISIANA	TRASH AND DEBRIS	CITY
72	08/22/2016	616 W LOUISIANA	JUNK APPLIANCES	CITY
73	08/22/2016	618 W LOUISIANA	TRASH AND DEBRIS	CITY
74	08/22/2016	918 N 5TH	TRASH AND DEBRIS	10 DAYS
75	08/22/2016	1224 N 6TH	GRASS AND WEEDS	10 DAYS
76	08/22/2016	1224 N 6TH	TREES AND SHRUBS	10 DAYS
77	08/22/2016	709 N 6TH	GRASS AND WEEDS	CITY
78	08/22/2016	709 N 6TH	TREES AND SHRUBS	CITY
79	08/22/2016	523 W PLUM	GRASS AND WEEDS	CITY
80	08/22/2016	523 W PLUM	TREES AND SHRUBS	CITY
81	08/22/2016	1310 N 7TH	GRASS AND WEEDS	OWNER
82	08/22/2016	1311 N 7TH	GRASS AND WEEDS	OWNER
83	08/22/2016	1311 N 7TH	TREES AND SHRUBS	OWNER
84	08/22/2016	1312 N 7TH	GRASS AND WEEDS	OWNER
85	08/22/2016	1315 N 7TH	GRASS AND WEEDS	OWNER
86	08/22/2016	1321 N 7TH	GRASS AND WEEDS	OWNER
87	08/22/2016	1327 N 7TH	JUNK VEHICLE	CITY
88	08/22/2016	1327 N 7TH	GRASS AND WEEDS	OWNER
89	08/22/2016	1406 HOUSTON	GRASS AND WEEDS	CITY
90	08/22/2016	1412 HOUSTON	GRASS AND WEEDS	OWNER
91	08/22/2016	1416 HOUSTON	GRASS AND WEEDS	OWNER
92	08/22/2016	2100 W EVERGREEN	TRASH AND DEBRIS	OWNER
93	08/22/2016	4102 W HWY 70	GRASS AND WEEDS	10 DAYS
94	08/22/2016	4102 W HWY 70	TRASH AND DEBRIS	10 DAYS
95	08/22/2016	4102 W HWY 70	TREES AND SHRUBS	10 DAYS
96	08/22/2016	4102 W HWY 70	JUNK VEHICLE	10 DAYS
97	08/22/2016	4102 W HWY 70	JUNK APPLIANCES	10 DAYS
98	08/26/2016	214-218 SYCAMORE	GRASS AND WEEDS	POSTED
99	08/26/2016	1410 N 10TH	GRASS AND WEEDS	POSTED
100	08/26/2016	1410 N 10TH	TREES AND SHRUBS	POSTED
101	08/26/2016	1410 N 10TH	DILAPIDATED	POSTED
102	08/26/2016	1701 N 10TH	GRASS AND WEEDS	POSTED
103	08/26/2016	1701 N 10TH	TRASH AND DEBRIS	POSTED
104	08/26/2016	VACANT - LINDEN WOODS	GRASS AND WEEDS	POSTED
105	08/26/2016	4618 WILSON	GRASS AND WEEDS	POSTED
106	08/26/2016	4618 WILSON	TRASH AND DEBRIS	POSTED

107	08/26/2016	4618 WILSON	DILAPIDATED	POSTED
108	08/26/2016	5004 KIMBERLY	GRASS AND WEEDS	POSTED
109	08/26/2016	5108 KIMBERLY	GRASS AND WEEDS	POSTED
110	08/26/2016	5108 KIMBERLY	JUNK VEHICLE	POSTED
111	08/26/2016	509 MEADOWLARK	GRASS AND WEEDS	POSTED
112	08/26/2016	509 MEADOWLARK	TREES AND SHRUBS	POSTED
113	08/26/2016	1924 W MAIN	TRASH AND DEBRIS	POSTED
114	08/26/2016	1924 W MAIN	TREES AND SHRUBS	POSTED
115	08/26/2016	623 S 15TH	GRASS AND WEEDS	POSTED
116	08/26/2016	623 S 15TH	DILAPIDATED	POSTED
117	08/26/2016	935 W GEORGIA	GRASS AND WEEDS	POSTED
118	08/26/2016	921 W GEORGIA	GRASS AND WEEDS	POSTED
119	08/26/2016	917 W GEORGIA	GRASS AND WEEDS	POSTED
120	08/26/2016	631 S 9TH	GRASS AND WEEDS	POSTED
121	08/26/2016	STONE BOOKE	DILAPIDATED	POSTED
122	08/26/2016	426 S 7TH	DILAPIDATED	POSTED

Agenda Item: 5.g.

The City of Durant

Donald W. Reynolds Community Center and Library

Memorandum

Date: 8/26/2016
To: Mayor and City Council
From: Robbee Tonubbee
Re: Library Report - August 2016

Council Information / Action Requested

City Staff Information / Action Follow-up, if Council authorizes this action:

ATTACHMENTS:

Description	Type	Upload Date
Library Monthly Report August 2016	Cover Memo	9/1/2016

Donald W Reynolds Community Center & Library

August 2016

Statistical Report

Attendance monthly total ----------9,961
Attendance daily average ----------369
Circulation monthly ----------6454
Circulation average daily ----------239
Interlibrary Loan books borrowed----------25
Interlibrary Load books loaned----------29
Computer usage total ----------1441
Computer usage average daily----------54
Computer usage average time----------51 min
Computer guest passes----------286
Computer guest passes average daily----------11
New borrowers added----------183
Materials donated ----------1950
(83 put in collection)

Interesting Statistics

Oklahoma Virtual Library: We participate in a consortium of about 25 libraries to share ebooks through the Oklahoma Virtual Library's Overdrive website and app. In August 2015 ebook downloads were **1577** and this August they were **1955.** This is a 24% increase. The library pays a nominal fee to use this platform and contributes about $2000 in content each year. This participation allows our library card holders to have access to thousands of ebooks in a variety of formats (Kindle, Nook, ipad, iphone, computer).

Veteran's services: **19** days of service with 3 different representatives took **277** appointments with veterans to get registered online, file paperwork relating to disability, apply for medical help, and any other assistance needed.

One-on-one technology sessions: Over **19** different people were helped and instructed on how to use their smart phones, tablets, laptops, library computers, and genealogy resources.

What's Going on and What's Coming up!

- Enertech conducted Oklahoma Pipeline Awareness Liason training in the library in August. Local Emergency Management took this opportunity to meet with this group. Emergency Management held Orion Damage Assessment training in the same week. There was also Rural Water Certification Training held at the library through the EPA. Local water and waste water departments were in attendance.

- The Durant Soccer Club finished up their online registrations at the library this month. The University of Oklahoma Outreach Services provided resource training for local parents the latter part of August. Families who attend this training are those who are interested in fostering or adopting through the state. Bryan County Youth Services also held First Time Offender Program training in the library over two Saturdays. This program helps local at risk youth and their families. This training is provided free of charge to the families in a collaboration with Youth Services & the library.

- In mid-August the director attended the International Federation of Library Associations in Columbus, Ohio. She was able to attend meetings and conferences concerning new technologies, community collaborations, services for those experiencing homelessness, and current library trends. The conference was partially funded by the ALA with a $1000 scholarship. This international conference was a great experience and it is an honor to be selected to receive the funding. Previous conferences have been in Singapore, France, & South Africa. Next year's conference will be in Poland.

- In July Guardian Hospice of Oklahoma brought in local cardiologist, Dr. Dib, for the monthly education series. August's meeting was related to making educated healthcare decisions. September's meeting will feature Dr. Dib and he will speak about COPD. There will be food available on a first come, first serve basis. The luncheons meet on the third Thursday of each month at noon. This is a collaborative effort from many different, competing, agencies.

- OHAI will be hosting a health and information meeting in early November for all who are interested. This event is FREE and is in its third year at the library.

Library Events & Programming

NEW Program Director & Literacy Coordinator – Jeremy Todd came on with us full time as of August 1st. He is taking over the Program Director role as well as adding the responsibility of Literacy Coordinator. The City of Durant decided to take in the literacy program earlier this year and we are excited to have another program that will help us serve our community. Currently Jeremy is working on his online training and gathering volunteers who are interested in helping people with their literacy skills. These sessions can be about helping someone develop their reading comprehension, studying for a high school equivalency class, or working on citizenship. He continues to work on the Raising A Reader program to get the red bags with books in them back out to the headstart classes. We hope to return the refreshed and renewed bags after Labor Day.

Friends of the Library – The group is working on getting the donations ready for the upcoming Book Sale. Members will be meeting every Tuesday morning in September to sort books for the sale and get things organized.
Donations are appreciated!

New programming – The library will be partnering with a group to teach art classes during the first and third Tuesday of the month to homeschooled children of all ages. This partnership will help bring new patrons into the library, increase our room rental revenue, and offer quality programming to the community. We are excited to see how this new partnership plays out and hope this will serve as a model for partnering with others in the community to offer exciting programming from skilled teachers.

Children's Programming – The month of September will see all the children's programming, for school aged children, resume with the Lego Club on Tuesdays and Reading Program on Thursdays after school. These programs do not require registration and patrons do not have to make an attendance commitment.

Library Promotion

Library Website – www.donaldwreynolds.okpls.org

Donald W Reynolds & Donald W Reynolds Friends of the Library- FACEBOOK FOR PHOTOS AND INFORMATION

http://www.facebook.com/home.php?#!/rlwpubliclibrary

Electronic Bulletin Board is being utilized to make announcements of library programs and services.

"Check it out at the Library" - weekly column with the Sunday edition of the Durant Daily Democrat.

Agenda Item: 5.h.

The City of Durant

Office of the Street Department

Memorandum

Date: 9/5/2016
To: Mayor and City Council
From: James Young Street Superintendent
Re: Street Department Report - August 2016

Council Information / Action Requested

City Staff Information / Action Follow-up, if Council authorizes this action:

ATTACHMENTS:

Description	Type	Upload Date
work orders	Cover Memo	9/8/2016
Report	Cover Memo	9/8/2016

Work Order Report

8/1/2016 - 08/31/2016

Work Order #	Location	Requested By	Work Description	Problem Code	Work Start Date	Work End Date
10472	1013 NTH 5TH	M&O	STREET CUT	001: Maintenance Repair	8/16/2016	8/22/2016
10471	623 NE 2ND	M&0	STREET CUT	001: Maintenance Repair	8/11/2016	8/22/2016
10470	UNIVERSITYPL/ MAIN	TONY BAEZA	2 POT HOLES	001: Maintenance Repair	8/22/2016	8/22/2016
10469	10TH/ MAIN	TONY BAEZA	3 POT HOLES	001: Maintenance Repair	8/22/2016	8/22/2016
10468	NTH 12 / MAIN	TONY BAEZA	1 POT HOLE	003: Road	8/22/2016	8/22/2016
10467	LIVEOAK/ NTH 18TH/BRYAN DR.	JAMES SCOTT	SWEEP STREET	003: Road	8/22/2016	8/22/2016
10466	LIVEOAK/ WASHINGTON/ NTH 15TH	JAMES SCOTT	SWEEP STREET	003: Road	8/22/2016	8/22/2016
10465	ELM/ WASHINGTON/ NTH 12TH	JAMES SCOTT	SWEEP STREET	003: Road	8/22/2016	8/22/2016
10464	E MAIN/NTH 1OTH/ MAIN	JAMES SCOTT	SWEEP STREET	003: Road	8/22/2016	8/22/2016
10463	E MAIN/ NTH 6TH	JAMES SCOTT	SWEEP STREET	003: Road	8/19/2016	8/19/2016
10462	W ELM/ WASHINGTON/ 21ST	JAMES SCOTT	SWEEP STREET	003: Road	8/19/2016	8/19/2016
10461	1328NTH 4TH	TONY BAEZA	1 POT HOLE	001: Maintenance Repair	8/19/2016	8/19/2016
10460	824NTH 9TH	TONY BAEZA	1 POT HOLE	001: Maintenance Repair	8/19/2016	8/19/2016
10459	UNIVERSITY/ GRAND	TONY BAEZA	1 POT HOLE	001: Maintenance Repair	8/19/2016	8/19/2016

Work Order #	Location	Requested By	Work Description	Problem Code	Work Start Date	Work End Date
10458	1301 NTH 7TH	TONY BAEZA	1 POT HOLE	001: Maintenance Repair	8/19/2016	8/19/2016
10457	NTH 7TH/ WALNUT	TONY BAEZA	1 POT HOLE	001: Maintenance Repair	8/19/2016	8/19/2016
10456	16TH / LOCUST	TONY BAEZA	2 POT HOLES	001: Maintenance Repair	8/19/2016	8/19/2016
10455	1801 LOCUST	TONY BAEZA	1 POT HOLE	001: Maintenance Repair	8/19/2016	8/19/2016
10454	1939 LOCUST	TONY BAEZA	1 POT HOLE	001: Maintenance Repair	8/18/2016	8/18/2016
10453	216STH 6TH	TONY BAEZA	1 POT HOLE	001: Maintenance Repair	8/18/2016	8/18/2016
10452	STH 6TH/ TEXAS	TONY BAEZA	1 POT HOLE	001: Maintenance Repair	8/18/2016	8/18/2016
10451	S 7TH/ LOUISANA	TONY BAEZA	1 POT HOLE	001: Maintenance Repair	8/18/2016	8/18/2016
10450	S 1ST/ ALABAMA	TONY BAEZA	1 POT HOLE	001: Maintenance Repair	8/18/2016	8/18/2016
10449	S 5TH/ GEORGIA	TONY BAEZA	1 POT HOLE	001: Maintenance Repair	8/18/2016	8/18/2016
10448	227 RADIO RD	TONY BAEZA	1 POT HOLE	001: Maintenance Repair	8/18/2016	8/18/2016
10447	W CEDAR/ WASHINGTO N/ 19TH	JAMES SCOTT	SWEEP STREET	003: Road	8/18/2016	8/18/2016
10446	W BEECH/ WASHINGTO N/CEDAR	JAMES SCOTT	SWEEP STREET	003: Road	8/18/2016	8/18/2016
10445	ROOSEVELT	JAMES SCOTT	SWEEP STREET	003: Road	8/18/2016	8/18/2016
10444	GRAND	JAMES SCOTT	SWEEP STREET	003: Road	8/18/2016	8/18/2016

Work Order #	Location	Requested By	Work Description	Problem Code	Work Start Date	Work End Date
10443	EVERGREEN/ NTH 1ST/ NTH 12TH	JAMES SCOTT	SWEEP STREET	003: Road	8/18/2016	8/18/2016
10442	WASHYINGTON/ MULBERRY	TONY BAEZA	1 POT HOLE	001: Maintenance Repair	8/17/2016	8/17/2016
10441	1824W ELM	TONY BAEZA	2 POT HOLES	001: Maintenance Repair	8/17/2016	8/17/2016
10440	1609 OLIVE	TONY BAEZA	1 POT HOLE	001: Maintenance Repair	8/17/2016	8/17/2016
10439	771 MOCKING BIRD	TONY BAEZA	1 POT HOLE	001: Maintenance Repair	8/17/2016	8/17/2016
10438	1105 LYNWOOD DR.	TONY BAEZA	3 POT HOLES	001: Maintenance Repair	8/17/2016	8/17/2016
10437	UNIVERSITY/ LYNWOOD	TONY BAEZA	1 POT HOLE	001: Maintenance Repair	8/17/2016	8/17/2016
10436	NTH 12TH/ MAIN	TONY BAEZA	PATCH POT HOLE AROUND WATER LEAK	001: Maintenance Repair	8/17/2016	8/17/2016
10435	UNIVERSITY/ CORNELL	DUSTY WIGGINS	NEW STOP SIGN/ STREET MARKER FOR NEW ADDITION	Citizen Complaint/Sign	8/16/2016	8/16/2016
10434	OLIVE/16TH	DUSTY WIGGINS	STREET SIGN FADED	Citizen Complaint/Sign	8/16/2016	8/16/2016
10433	0LIVE/ 17TH	DUSTY WIGGINS	STREET MARKER FADED	Citizen Complaint/Sign	8/16/2016	8/16/2016
10432	19TH/ PARKWAY CIR.	DUSTY WIGGINS	STOP SIGN FADED	Citizen Complaint/Sign	8/16/2016	8/16/2016
10431	19TH/ OLIVE	DUSTY WIGGINS	STREET MARKER FADED	Citizen Complaint/Sign	8/17/2016	8/17/2016
10430	18TH/ OLIVE	DUSTY WIGGINS	STREET MARKER FADED	Citizen Complaint/Sign	8/17/2016	8/17/2016

Work Order #	Location	Requested By	Work Description	Problem Code	Work Start Date	Work End Date
10429	CEDAR/ NTH 15TH	DUSTY WIGGINS	STREET MARKER FADED	003: Road	8/17/2016	8/17/2016
10428	GRAND	JAMES SCOTT	SWEEP STREET	003: Road	8/17/2016	8/17/2016
10427	GRANT	JAMES SCOTT	SWEEP STREET	003: Road	8/17/2016	8/17/2016
10426	NTH 14TH/ CEDAR/ MULBERRY	JAMES SCOTT	SWEEP STREET	003: Road	8/17/2016	8/17/2016
10425	NTH 13TH/ EVERGREEN/ MULBERRY	JAMES SCOTT	SWEEP STREET	003: Road	8/17/2016	8/17/2016
10424	E MAIN/BRIDGE	JAMES SCOTT	SWEEP STREET	003: Road	8/17/2016	8/17/2016
10423	E MAIN/ NTH 6TH	JAMES SCOTT	SWEEP STREET	003: Road	8/17/2016	8/17/2016
10422	NTH 13TH/ EVERGREEN/ MULBERRY	JAMES SCOTT	SWEEP STREET	003: Road	8/16/2016	8/16/2016
10421	NTH 12TH/ MAIN / UNIVERSITY	JAMES SCOTT	SWEEP STREET	003: Road	8/16/2016	8/16/2016
10420	NTH 11TH/ MAIN/ BALTIMORE	JAMES SCOTT	SWEEP STREET	003: Road	8/16/2016	8/16/2016
10419	NTH 1ST/ MULBERRY	JAMES SCOTT	SWEEP STREET	003: Road	8/16/2016	8/16/2016
10418	NTH11TH/ MAIN/ BALTIMORE	JAMES SCOTT	SWEEP STREET	003: Road	8/15/2016	8/15/2016
10417	NTH 19TH/ MAIN/ UNIVERSITY	JAMES SCOTT	SWEEP STREET	003: Road	8/15/2016	8/15/2016
10416	E MAIN/NTH15TH/ MAIN	JAMES SCOTT	SWEEP STREET	003: Road	8/15/2016	8/15/2016
10415	GAIL FARRELL/ QUAIL RIDGE	DUSTY WIGGINS	STREET MARKER FADED	Citizen Complaint/Sign	8/15/2016	8/15/2016
10414	ASBERRY/ ALMA	DUSTY WIGGINS	STREET MARKERS FADED	Citizen Complaint/Sign	8/15/2016	8/15/2016

Work Order #	Location	Requested By	Work Description	Problem Code	Work Start Date	Work End Date
10413	12 TH / DIXON	DUSTY WIGGINS	STREET MARKER FADED	Citizen Complaint/Sign	8/15/2016	8/15/2016
10412	MULBERRY/ WASHINGTON	DUSTIN WIGGINS	STREET MARKER MISSING	Citizen Complaint/Sidewalk	8/15/2016	8/15/2016
10411	MULBERRY/ 10TH	DUSTY WIGGINS	STOP SIGN FADED	Citizen Complaint/Sign	8/15/2016	8/15/2016
10410	WORLEY/ CHUCKWA	DUSTY WIGGINS	STREET MARKER FADED	Citizen Complaint/Sign	8/12/2016	8/12/2016
10409	DONNA SUE/ CORINE	DUSTY WIGGINS	STREET SIGNS DAMAGED/ MISSING	Citizen Complaint/Sign	8/11/2016	8/11/2016
10408	GRAND/ DENISON	DUSTY WIGGINS	STOP SIGN FADED	Citizen Complaint/Sign	8/11/2016	8/11/2016
10407	2ND/ PINE	DUSTY WIGGINS	FADED STOP SIGN	Citizen Complaint/Sign	8/12/2016	8/12/2016
10406	2ND/ CEDAR	DUSTY WIGGINS	STREET MARKER FADED	Citizen Complaint/Sign	8/12/2016	8/12/2016
10405	12TH/ LENORE	DUSTY WIGGNS	STREET MARKER FADED	Citizen Complaint/Sign	8/12/2016	8/12/2016
10404	DONNA SUE/ CORINE	DUSTY WIGGINS	STREET MARKER MISSING	Citizen Complaint/Sign	8/12/2016	8/12/2016
10403	DIXON/ GRANT	DUSTY WIGGINS	STREET MARKERS FADED	Citizen Complaint/Sign	8/12/2016	8/12/2016
10402	DENTWOOD/ ROLLING LANE	DUSTY WIGGINS	FADED STREET MARKER	Citizen Complaint/Sidewalk	8/12/2016	8/12/2016
10401	NTH 9TH/ MAIN/ UNIVERSITY	JAMES SCOTT	SWEEP STREET	003: Road	8/12/2016	8/12/2016
10400	NTH 8TH/ MAIN/UNIVERSITY	JAMES SCOTT	SWEEP STREET	003: Road	8/12/2016	8/12/2016
10399	NTH 4TH/ ELM	JAMES SCOTT	SWEEP STREET	003: Road	8/12/2016	8/12/2016

Work Order #	Location	Requested By	Work Description	Problem Code	Work Start Date	Work End Date
10398	E MAIN/ NTH 5TH/MAIN	JAMES SCOTT	SWEEP STREET	003: Road	8/12/2016	8/12/2016
10397	NTH 8TH	JAMES SCOTT	SWEEP STREET	003: Road	8/11/2016	8/11/2016
10396	BRIARWOOD / GAILFARRELL	MRS LARRANCE	SWEEP STREET	003: Road	8/11/2016	8/11/2016
10395	ADA	JAMES SCOTT	SWEEP STREET	003: Road	8/11/2016	8/11/2016
10394	NTH 12TH/ GAIL FARRELL	JAMES SCOTT	SWEEP STREET	003: Road	8/11/2016	8/11/2016
10393	AIRPORT	DEWAYNE	SWEEP AROUND NEW HANGERS	003: Road	8/11/2016	8/11/2016
10392	AIRPORT	DEWAYNE	SWEEP AROUND NEW HANGERS	003: Road	8/11/2016	8/11/2016
10391	NTH 1ST/ ARKANSAS	DUSTY WIGGINS	SIGN DOWN	Citizen Complaint/Sign	8/9/2016	8/9/2016
10390	PLUM/7TH/6TH	DUSTY WIGGINS	SPEED LIMIT SIGN VANDALIZED	Citizen Complaint/Sign	8/9/2016	8/9/2016
10389	NTH 7TH/ UNIVERSITY/ MAIN	JAMES SCOTT	SWEEP STREET	003: Road	8/10/2016	8/10/2016
10388	100 BLK/ S MCLEAN	JAMES YOUNG	SWEEP GLASS UP FROM STREET	003: Road	8/10/2016	8/10/2016
10387	NTH 7TH/ MAIN/ UNIVERSITY	JAMES SCOTT	SWEEP STREET	003: Road	8/10/2016	8/10/2016
10386	E. MAIN/NTH 15TH/ MAIN	JAMES SCOTT	SWEEP STREET	003: Road	8/10/2016	8/10/2016
10385	NTH 8TH/ MULBERRY	JAMES SCOTT	SWEEP STREET	003: Road	8/9/2016	8/9/2016
10384	NTH 7TH/ MAIN/ UNIVERSITY	JAMES SCOTT	SWEEP STREET	003: Road	8/9/2016	8/9/2016

Work Order #	Location	Requested By	Work Description	Problem Code	Work Start Date	Work End Date
10383	NTH 6TH/ MAIN/ UNIVERSITY	JAMES SCOTT	SWEEP STREET	003: Road	8/9/2016	8/9/2016
10382	UNIVERSITY/ WASHINGTON/UNIVERSITY PLACE	JAMES SCOTT	SWEEP STREET	003: Road	8/9/2016	8/9/2016
10381	NTH 6TH/ UNIVERSITY	JAMES SCOTT	SWEEP STREET	003: Road	8/8/2016	8/8/2016
10380	NTH 5TH/ MAIN/ UNIVERSITY	JAMES SCOTT	SWEEP STREET	003: Road	8/8/2016	8/8/2016
10379	NTH 4TH/ MAIN/UNIVERSITY	JAMES SCOTT	SWEEP STREET	003: Road	8/8/2016	8/8/2016
10378	E MAIN/ NTH 6TH/ MAIN	JAMES SCOTT	SWEEP STREET	003: Road	8/8/2016	8/8/2016
10377	12TH/ DENISON	DUSTY WIGGINS	STREET MARKER FADED	Citizen Complaint/Sign	8/8/2016	8/8/2016
10376	1322 NTH 5TH	DUSTY WIGGINS	NO PARKING IN THE ALLEY SIGN BENT	Citizen Complaint/Sign	8/8/2016	8/8/2016
10375	NTH 5TH/ WALNUT	DUSTY WIGGINS	STREET SIGN FADED	Citizen Complaint/Sidewalk	8/8/2016	8/8/2016
10374	1331 NTH 6TH	DUSTY WIGGINS	NO PARKING SIGN FADED AND BENT	Citizen Complaint/Sign	8/8/2016	8/8/2016
10373	NTH 4TH/ MAIN/ UNIVERSITY	JAMES SCOTT	SWEEP STREET	003: Road	8/5/2016	8/5/2016
10372	NTH 3RD/MAIN/ UNIVERSITY	JAMES SCOTT	SWEEP STREET	003: Road	8/5/2016	8/5/2016
10371	NTH 2ND/MAIN/WALNUT	JAMES SCOTT	SWEEP STREET	003: Road	8/5/2016	8/5/2016
10370	E MAIN/ NTH 6TH/ MAIN	JAMES SCOTT	SWEEP STREET	003: Road	8/5/2016	8/5/2016
10369	5TH/ PLUM	DUSTY WIGGINS	2 STREET SIGNS FADED	Citizen Complaint/Sign	8/5/2016	8/5/2016

Work Order #	Location	Requested By	Work Description	Problem Code	Work Start Date	Work End Date
10368	DALLAS/12TH	DUSTY WIGGINS	STREET MARKER FADED	Citizen Complaint/Sign	8/5/2016	8/5/2016
10367	NTH 8TH/ WALNUT	DUSTY WIGGINS	2 NO PARKING SIGNS	Citizen Complaint/Sign	8/5/2016	8/5/2016
10366	7TH/ CEDAR	DUSTY WIGGINS	STREET SIGN FADED	Citizen Complaint/Sign	8/5/2016	8/5/2016
10365	NTH 2ND/MAIN/UNIVERSITY	JAMES SCOTT	SWEEP STREET	003: Road	8/4/2016	8/4/2016
10364	BALTIMORE/ NTH 10TH/ GRANT	JAMES SCOTT	SWEEP STREET	003: Road	8/4/2016	8/4/2016
10363	100 BLK S TH 7TH	JAMES YOUNG	SWEEP STREET	003: Road	8/4/2016	8/4/2016
10362	UNIVERSITY/ NTH 1ST/WASHINGTON	JAMES SCOTT	SWEEP STREET	003: Road	8/4/2016	8/4/2016
10361	NTH 2ND/ WILLOW	DUSTY WIGGINS	LIMBS COVERING STOP SIGN	Citizen Complaint/Sign	8/3/2016	8/4/2016
10360	WASHINGTON/ WACO	DUSTY WIGGINS	STREET SIGN MISSING	Citizen Complaint/Sign	8/4/2016	8/4/2016
10359	NTH 3RD/ WILLOW	DUSTY WIGGINS	STREET SIGN FADED	Citizen Complaint/Sign	8/4/2016	8/4/2016
10358	NTH 3RD/ SYCAMORE	DUSTIN WIGGINS	STREET MARKERS FADED	Citizen Complaint/Sign	8/4/2016	8/4/2016
10357	NTH 3RD/ POPLAR	TONY BAEZA	1 POT HOLE	001: Maintenance Repair	8/3/2016	8/3/2016
10356	1529 ARKANSAS	TONY BAEZA	2 POT HOLES/ 1 LEVEL PATCH	001: Maintenance Repair	8/3/2016	8/3/2016
10355	1800 ARKANSAS	TONY BAEZA	LEVEL PATCH	001: Maintenance Repair	8/3/2016	8/3/2016
10354	W MAIN/NTH 75 ON RAMP	JAMES YOUNG	YEILD SIGN KNOCKED DOWN	Citizen Complaint/Sign	8/3/2016	8/3/2016

Work Order #	Location	Requested By	Work Description	Problem Code	Work Start Date	Work End Date
10353	HOUSTON/ GRANT/ NTH 12TH	JAMES SCOTT	SWEEP STREET	003: Road	8/3/2016	8/3/2016
10352	WILLOW/NTH 2ND/ NTH 12TH	JAMES SCOTT	SWEEP STREET	003: Road	8/3/2016	8/3/2016
10351	E MAIN/NTH 6TH/ MAIN	JAMES SCOTT	SWEEP STREET	003: Road	8/3/2016	8/3/2016
10350	1019MISSISSIPPI	M&O	STREET CUT	001: Maintenance Repair	8/3/2016	8/3/2016
10349	1319 W. MISSISSIPPI	M&O	ROAD CUT	001: Maintenance Repair	8/3/2016	8/3/2016
10348	116 W. MAIN ST.	M&O	ROAD CUT	001: Maintenance Repair	8/3/2016	8/3/2016
10347	902 N. 6TH	M&O	ROAD CUT	001: Maintenance Repair	8/3/2016	8/3/2016
10346	S.14TH/ ALABAMA	TONY BAEZA	6 POTHOLES	001: Maintenance Repair	8/1/2016	8/1/2016
10345	4025 SUNNYSIDE RD.	TONY BAEZA	4 POTHOLES	001: Maintenance Repair	8/1/2016	8/1/2016
10344	S.17TH/ MISSISSIPPI	TONY BAEZA	LEVEL PATCH	001: Maintenance Repair	8/1/2016	8/1/2016
10343	ARKANSAS/RADIO RD.	TONY BAEZA	POTHOLE	001: Maintenance Repair	8/1/2016	8/1/2016
10342	3527 ARKANSAS`	TONY BAEZA	POTHOLE	001: Maintenance Repair	8/1/2016	8/1/2016
10341	5222 MARTIN CIR.	JAMES SCOTT	SWEEP STREET	003: Road	8/1/2016	8/1/2016
10340	DALLAS/ 12TH/WASHINGTON	JAMES SCOTT	SWEEP STREET	003: Road	8/1/2016	8/1/2016
10339	LENORE/ MULBERRY/ 12TH	JAMES SCOTT	SWEEP STREET	003: Road	8/1/2016	8/1/2016

Work Order #	Location	Requested By	Work Description	Problem Code	Work Start Date	Work End Date
10338	WACO/ N.12TH/WASHINGTON	JAMES SCOTT	SWEEP STREET	003: Road	8/1/2016	8/1/2016
10337	S. 4TH/ MISSISSIPPI	TONY BAEZA	POTHOLE	001: Maintenance Repair	8/2/2016	8/2/2016
10336	100 BLK S.8TH	TONY BAEZA	2 POTHOLES	001: Maintenance Repair	8/2/2016	8/2/2016
10335	CALE SWITCH/ SUNNY MEADOWS	TONY BAEZA	2 POTHOLES/ LEVEL PATCH	001: Maintenance Repair	8/2/2016	8/2/2016
10334	4025 SUNNYSIDE RD.	TONY BAEZA	POTHOLE/ LEVEL PATCH	001: Maintenance Repair	8/2/2016	8/2/2016
10333	PLUM/ N.1ST/ N. 6TH	JAMES SCOTT	SWEEP STREET	003: Road	8/2/2016	8/2/2016
10332	SYCAMORE/ N.1ST/N. 4TH	JAMES SCOTT	SWEEP STREET	003: Road	8/2/2016	8/2/2016
10331	WALNUT/ N. 1ST/ N.5TH	JAMES SCOTT	SWEEP STREET	003: Road	8/2/2016	8/2/2016
10330	POPLAR/ N.1ST/ N.6TH	JAMES SCOTT	SWEEP STREET	003: Road	8/2/2016	8/2/2016
10329	E. MAIN/N.10TH / MAIN ST.	JAMES SCOTT	SWEEP STREET	003: Road	8/2/2016	8/2/2016
10328	1621 NTH 10TH	M&O	STREET CUT	001: Maintenance Repair	7/29/2016	7/29/2016
10327	1704 EVERGREEN	M&O	STREET CUT	001: Maintenance Repair	7/29/2016	7/29/2016
10326	2417 WILSON	M&O	STREET CUT	001: Maintenance Repair	7/29/2016	7/29/2016
10325	2314 WILSON	M&O	STREET CUT	001: Maintenance Repair	7/29/2016	7/29/2016
10324	1823 RED FOX	M&O	STREET CUT	001: Maintenance Repair	7/29/2016	7/29/2016

Work Order #	Location	Requested By	Work Description	Problem Code	Work Start Date	Work End Date
10323	2802 BRIARWOOD	M&O	STREET CUTS	001: Maintenance Repair	7/29/2016	7/29/2016
10322	1600 NTH 10TH	M&O	2 STREET CUTS	001: Maintenance Repair	7/29/2016	7/29/2016
10321	7TH / CHUCKWA	M&O	STREET CUTS	001: Maintenance Repair	7/29/2016	7/29/2016

Total Records: 152 **9/8/2016**

THE CITY OF DURANT
Office of the Street Department

DURANT
· OKLAHOMA ·

Street Department Project Schedule
August 1st 2016 thru August 31st 2016

A. Work Completed:

1. 2232 Gershwin Dr. repair drainage
2. Painted crosswalks
3. Cleaned drainage grates City wide
4. Willow between 8th and 9th leveled patched
5. 1602 Timberline cleaned out drainage pipe
6. Repaired sink hole 2000 block of Elm
7. 1810 Cedar cleaned drainage ditch in alley
8. Alley way behind City Hall repaired sink hole
9. Nth 5th and Walnut repaired sink hole
10. Repaired drainage culvert between 1009 and 1013 Wilson
11. Cut grade, geo grid and base rocked on Country Club Rd
12. Patched street cuts
13. 2400 w Main cleaned ditches
14. Hauled clay to slide area at lake Durant dam
15. Swept runways / Taxi ways
16. Ran Sweeper
17. Sign Maintenance.
18. Ran Patch Truck

B. Work Planned For July 2016

County Club RD. reconstruction	April. / Oct.
EOC Parking lot construction	Apr./ Dec.

C. Work Planned For July. 2016 Thru July 2017 Approx. start date – Finish date

Replace drainage pipe at Durant Middle School	Oct./ Feb.

D. Projects Planned and Requested for Authorization:

1202 1/2 N.E. 2nd • Durant, Oklahoma 74701 • (580) 924-8828 • Fax (580) 924-8344
www.durant.org

GRANTS DEPARTMENT

August 31, 2016

GRANT YEAR	GRANT AGENCY	GRANT PROGRAM	PROJECT DESCRIPTION	STATUS	OPEN PROJECTS AWARDED PRIOR TO 2015	GRANT AWARDS 2015 T0 2016	PENDING AWARDS (As of Aug 31)
2016	FEMA / Homeland Security	Assistance to Firefighters	FF Operational-Safety Equip	Not funded: Aug 2016			**0.00**
2016	FEMA / Homeland Security	Assistance to Firefighters	Pumper Engine	Not funded: Aug 2016			**0.00**
2011	FEMA / Homeland Security	EOC	Emgcy Operations Ctr (EOC)	Parking lot / interior	**950,000.00**		
2014	ODOC / CDBG	Small Cities	Filter Media Project	Closeout Process	**118,044.00**		
2015	ODOC / CDBG	Small Cities	WaterTower Valves, SCADA,PLCs	Project Design / install		**138,986.00**	
2016	ODOC / CDBG	Small Cities	Street Improvements	Submitted July 18, 2016			**85,707.00**
2012	ODOC / CDBG-ED	Economic Development Infrastructure Financing	Pharmcare (Waldron Rd)	Complete: Job Tracking	**500,000.00**		
2014	ODOC / CDBG-ED	Economic Development Infrastructure Financing	Overland Asphalt Plant (Country Club Road)	Construction: Job Tracking		**525,000.00**	
2015	ODOC / CDBG-ED	Economic Development Infrastructure Financing	Tile Shop (new facility)	Council Declined Grant At Tile Shop Request			
2016	ODOC / CDBG-ED	Economic Development Infrastructure Financing	Commercial Metals Company	Pending Grant Application			**1,000,000.00**
2014	OK TSET (Tobacco Settlement Endowment	Healthy Community Incentive	Slaton Park Improvements	Construction almost complete Aug 2016	**50,000.00**		
2016	OK Tourism / LWCF	Outdoor recreation	Carl Albert Park	Awarded 5/31/16 - environmental/planning		**182,900.00**	
2012	OK Tourism / Trails	Recreational Trail	DMSC Multi-Purpose trail	Trail Complete: Rest Room Construction	**160,000.00**		
2016	National Endowment for the Arts	Our Town	Develop a Master Plan & Design to Create Arts District	Awarded May 9, 2016		**50,000.00**	
2015	US Dept of Interior / National Park Service	Rivers, Trails & Conservation Assistance	Trail Master Plan: Technical Assistance	Awarded: Strategic Planning		**-**	
2014	US Dept of Justice	Bulletproof Vest Partnership	Bulletproof Vests	Vests received; reimb requested	**1,895.00**	**-**	
2015	US Dept of Justice	JAG-Edward Byrne	E-Ticketing / Citation System	Awarded 9/15: Implementation		**13,450.00**	
2015	DEQ	Brownfields	Asbestos Abatement for city hall	Completed: May 9 (waiting on report)			
2016	Federal Highway	Transportation Alternative (TAP)	Rails to Trails	Awarded Aug 1 2016		**396,630.00**	
2016	Federal Highway	Transportation Alternative (TAP)	SRTS:Sidewalks/Bike Lanes	Not funded Aug 2016			**0.00**
2016	US Dept of Justice	JAG-Edward Byrne	HVAC System for Fire arms range	Submitted June 30, 2016			**11,995.00**
2016	National Endowment for the Arts	Creative Placemaking Technical Assist Grant	Provide expertise during Our Town project	Not funded Aug 2016			**0.00**
	GRANTS AWARDED, OPEN OR PENDING THRU AUGUST 31, 2016			**TOTALS**	**1,779,939.00**	**1,306,966.00**	**1,097,702.00**

Agenda Item: 5.j.

The City of Durant

Durant/Bryan County Emergency Management

Memorandum

Date: 9/7/2016
To: Mayor and City Council
From: James Dalton, Director
Re: Emergency Management Services Report - August 2016

Council Information / Action Requested

City Staff Information / Action Follow-up, if Council authorizes this action:

ATTACHMENTS:

Description	Type	Upload Date
Emergency Management Report - August 2016	Cover Memo	9/7/2016

DURANT/BRYAN COUNTY EMERGENCY MANAGEMENT

PUBLIC SAFETY, PUBLIC TRUST

TO: Council Members, Durant City Council

FROM: James Dalton, Emergency Management Director

DATE: August 31, 2016

SUBJECT: Monthly Report for August 2016

ADMINISTRATION:

The Outdoor Warning Siren Test was conducted August 4. 17 of 19 sirens located in Durant were operational. The siren at the Sports Complex had a weak battery that had to be replaced. The siren located at 2808 Enterprise had to have a battery and battery charger replaced following the test. Summer heat causes weak batteries to fail under load.

We have 2 sirens that are not operational in Bryan County; Willow Springs, and Mead. The Bennington siren was repaired by the Town of Bennington and is now operational. The Willow Springs operates, but doesn't rotate. It appears to be a drive belt. The Mead siren took a direct lightning strike and caused catastrophic damage. Mead recently purchased a used American Signal Siren that is compatible with their current siren and will be attempting to get their site operational.

The next scheduled test is Thursday September 1st. We will continue to test these outdoor warning sirens on the 1st Thursday of each month at 1400 hours, provided that conditions are acceptable for the test. This allows for schools, SOSU, nursing facilities, Alliance, and others to practice their Tornado Drill during the normal work or school time.

Grant Information:

The 2016 Emergency Management Performance State and Local Assistance Grant (EMPG – SLA) application was submitted to Oklahoma Emergency Management on September 24. On November 30, 2015 we received an email that contracts for 2016 have been released and that Durant / Bryan County Emergency Management will receive an initial award of $40,000 ($10,000 / Quarter) for FY 2016. The Authority to Accept the EMPG – SLA Grant for FY 2016 was approved by council on the January 12, 2016. The completed grant documents were submitted electronically to OEM on January 13, 2016.
The 1st Qtr. Payment was received by EFT (Electronic Funds Transfer) on April 21.
The 2ndQtr. Payment was received by EFT (Electronic Funds Transfer) on June 28.
The 3rd Qtr. documents will be submitted in September.
The 4th Qtr. ends on September 30, 2016.

The 2017 Emergency Management Performance State and Local Assistance Grant (EMPG – SLA) application was released August 15. I will have the grant application completed and returned to OEM by September 15.
On August 8, the City received the $25,000 EMPG Supplement Grant to fund the implementation of the Durant Fire Swift Water Rescue Team.

SAFETY:

EM (Emergency Management) / Safety in conjunction with the Durant Police Department, especially Capt. Mike Woodruff, have been doing CRASE (Civilian Response to Active Shooter Events) Training for the city, county, schools, businesses, KTC, and SOSU. To date, we have conducted 46 trainings and trained over 2900 people. Capt. Woodruff presented the CRASE Training at the Oklahoma Emergency Management Conference / Workshop in Norman August 17.
Upcoming Training:

1. Ok – First Weather Radar Recertification September 20 - Durant Library
2. Public Information Officer Training September 26 – 27 - Durant Library
3. Trench Awareness Training (2 Classes) September 29 - Durant Library

EMERGENCY MANAGEMENT:

Wednesday, August 3rd at 1000 Kenneth Eppler responded to the DPD to check availability on the Airaya 4.9 GHs Wireless grid.
From 1100-1300 Kenneth Eppler responded to the City Hall to do maintenance and reprogram the Radio Panic Alarm System.

Thursday, August 4th from 1000 – 1200 I met with Bryan County Health Department officials and other local Public Safety department heads regarding the upcoming regional MIPS (Mass Immunization and Prophylaxis Strategy) Exercise (October 3-4).
NOTE: Throughout the rest of this document, when **MIPS** is referenced, it will be referring to the Mass Immunization and Prophylaxis Strategy Plan at the Health Dept.
At 1400 EM conducted the monthly Storm Siren test. (**See results above under Administration**).

Friday, August 5th from 1230 – 1430 EM was dispatched to the Airport to assist local law enforcement with logistics on a manhunt for a burglary suspect that ran from police.

Saturday, August 6th Miles Gooding on phone duty and call back.
Sunday, August 7th Miles Gooding on phone duty and call back.

Monday, August 8th at 1000 Kenneth Eppler responded to the DFD to program 2 way radios for DFD Tender 3.

Tuesday, August 9th at 1445 the National Weather Service issued a Severe Thunderstorm Warning for Atoka and far northern Bryan County. The EOC was activated and spotters deployed until 1530.
NOTE: Throughout the rest of this document, when **NWS** is referenced, it will be referring to the **National Weather Service.**
From 1530 – 1730, I met with Bryan Hallmark, Kiamichi Technology Center (KTC) Safety Coordinator regarding upcoming safety training.
At 1800 I attended the Durant City Council Meeting

Thursday, August 11th at 0800 Kenneth Eppler responded to DFD to program (6) Handheld Radios.

Friday, August 12th at 1400 the NWS – Norman issued a Severe Thunderstorm Warning for Atoka and far northern Bryan County. The EOC was activated and spotters deployed until the storms were out of the area.

Saturday, August 13th Kenneth Eppler on phone duty and call back.
Sunday, August 14th Kenneth Eppler on phone duty and call back.

Monday, August 15th Miles Gooding and James Dalton attended the Oklahoma Emergency Management Association Annual Conference and Workshop in Norman, OK. Attendance at the OEMA Conference is mandatory to receive our EMPG-SLA grant.
At 1200 Kenneth Eppler responded to the Waste Water Treatment Plant (WWTP) to program PLC – F.
NOTE: Throughout the rest of this document, when **WWTP** is referenced, it will be referring to the **W**aste **W**ater **T**reatment **P**lant located on Davis Road.

Tuesday, August 16th Miles Gooding and James Dalton attended the Oklahoma Emergency Management Association Annual Conference and Workshop in Norman, OK.

Wednesday, August 17th Kenneth Eppler and James Dalton attended the Oklahoma Emergency Management Association Annual Conference and Workshop in Norman, OK.

Thursday, August 18th Kenneth Eppler and James Dalton attended the Oklahoma Emergency Management Association Annual Conference and Workshop in Norman, OK.

Friday, August 19th at 1300 I attended a building meeting on the new Durant Regional Emergency Operations Center (DREOC).
NOTE: Throughout the rest of this document, when **DREOC** is referenced, it will be referring to the **D**urant **R**egional **E**mergency **O**perations **C**enter under construction near the airport at 5861 Cessna.

Saturday, August 20th James Dalton on phone duty and call back.
Sunday, August 21st James Dalton on phone duty and call back.

Tuesday, August 23rd from 1030 – 1200 Kenneth Eppler responded to assist Shipman Communications with getting access and replacing aircraft clearance lights on the Chuckwa water tower.
From 1100 – 1330 EM Staff and Volunteers; along with other first responders in the area attended a Pipeline Awareness Training at the Library.

Wednesday, August 24th from 0730 - 1000 Kenneth Eppler responded to the WWTP to assist in restoring internet service on the wireless link.
1000 - 1500 EM Staff and Volunteers; along with first responders, GIS personnel, and elected officials attended Orion Damage Assessment Software Training at the Library.
At 1600 EM was dispatched by OHP to assist with command, logistics, communications, and canteen service at a fatality accident at US 69/75 and SH 22 at Caddo. The accident involved a Semi-tanker that hit the SH 22 overpass, causing extensive damage to the overpass and spillage of approximately 500 gallons of Sulfuric Acid that created a Hazmat Incident. EM assisted with establishing a Unified Command, used the EM Repeater to establish tactical communications, coordinated with ODOT and OHP to reroute traffic from US 69/75 and SH 22, and supplied canteen service for responders.
A Hazmat Clean-up Company was called to the scene and continued clean-up throughout the night. The northbound US 69 / 75 traffic returned to normal at 0130, southbound US 69 / 75 traffic was detoured at the Caddo Exit. The SH 22 overpass will remain closed for approximately 2 months while repairs are made. Command was terminated at 0230.
The cause of the accident remains under investigation.

Thursday, August 25th at 1100 I attend the Handbook Committee Meeting.
At 1330 EM Staff attended the Geo-Safe GPS First Responder Software training at DFD.

Saturday, August 27th Miles Gooding on phone duty and call back.
Sunday, August 28th Miles Gooding on phone duty and call back.

Monday, August 29th from 0730 - 1200 Kenneth Eppler responded to the WWTP to restore wireless communications between the WWTP and the headworks on NE 2nd.
From 1000 – 1200, I met with Bryan County Health Department officials and other local Public Safety department heads regarding the upcoming regional MIPS Exercise.
From 1200 – 1400, I met with Madill / Marshall County EM, Hubert Weaver regarding the upcoming MIPS Exercise, mutual aid between our counties, and upcoming training.
At 1310 Kenneth Eppler was dispatch to the Cardinal Glass water tower to assist Rise Broadband gain access to the water tower to restore a communications link.
From 1430 – 1730, I attended a 911 meeting at the Durant Police Department.
From 1500 – 1700, Kenneth Eppler responded to storm siren outage alarm at the siren located in the 5500 block of University. It was determined that the storm siren had either taken a lightning strike or a power surge causing the siren to become non-operational. Circuit boards have been ordered for the siren and are expected be shipped in September. Cost of the boards is approximately $1900. The siren will remain down until we receive the parts and can get them installed.

Tuesday, August 30th at 0745 Kenneth Eppler responded to the WWTP to check PLC-G.
At 0845 Kenneth Eppler responded to City Hall to reprogram Panic Button 28.
From 1000 – 1230 Kenneth Eppler was dispatch to the Cardinal Glass water tower to assist Rise Broadband gain access to the water tower to restore a communications link.

Wednesday, August 31st from 0830 - 1300 Kenneth Eppler responded to the WWTP to adjust the output on the new hydroranger 200.

James Dalton, Director

Agenda Item: 5.k.

The City of Durant

Office of City Clerk

Memorandum

Date: 9/9/2016
To: Mayor and City Council
From: Donnalla Miller, Acting City Manager
Re: Human Resources Department Report - August 2016

Council Information / Action Requested

City Staff Information / Action Follow-up, if Council authorizes this action:

ATTACHMENTS:

Description	Type	Upload Date
HR Department Report - August 2016	Exhibit	9/9/2016

August Report

Recruitment:

Vacant: City Manager
Solid Waste Collection Driver
Dispatcher

Filled: Fire Fighter (2)
Customer Service Representative

Temp staffing costs:

1/1/14 – 12/31/14 = $331,224.83
1/1/15 – 12/31/15 = $281,537.26

1/1/15 - 09/9/15 = $207.579.00
1/1/16 – 9/14/16 = $10, 418.05

Current (on-going) Events & Projects:

Employee Handbook Committee
Employee Appreciation Picnic (September 30th)
Safety Training (September 22nd)
Website Redesign Stakeholder Meetings with CivicsPlus Implementation Consultant September 20-22

Future Events & Projects:

Open Enrollment Scheduled (Oct. 10-14)
Performance Evaluation Training (Oct. 18 & 19)
Employee Wellness Event (Oct.)
Customer Service Training Scheduled (November 9 & 10)

Agenda Item: 7.a.

The City of Durant

Office of City Clerk

Memorandum

Date:	9/1/2016
To:	Mayor and City Council
From:	Cynthia J. Price, City Clerk
Re:	Consider Executive Session to Discuss Hiring of City Manager (This Executive Session Authorized by Title 25, Section B(1) of the Oklahoma State Statutes

---

Council Information / Action Requested

City Staff Information / Action Follow-up, if Council authorizes this action:

Agenda Item: 7.b.

The City of Durant

Office of City Clerk

Memorandum

Date: 9/1/2016
To: Mayor and City Council
From: Cynthia J. Price, City Clerk
Re: Consider Action Pursuant to 7(a) Above

Council Information / Action Requested

City Staff Information / Action Follow-up, if Council authorizes this action: